Smart Energy & Power Quality Solutions

UMG 96-PA – energy measurement device



4-IN-1
FOUR FUNCTIONS – ONE SOLUTION

EnMS MID PQ RCM

Janitza®

MODULAR EXPANSION

2 analogue inputs – can be selected as 0–20 mA analogue inputs (e.g. DC measurement) or as RCM measuring inputs with detection of cable breaks and additional temperature measurement

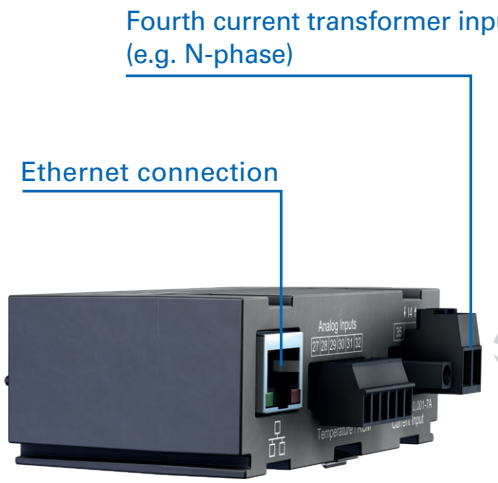

UMG 96-PA module with Ethernet connection

RCM measurement

The analogue inputs can be used for residual current monitoring. Thus, residual currents and insulation problems can be detected in time and the system availability assured. In addition, the effort required for the DGUV V3 repetitive testing can be significantly reduced.

or individually configurable as

2 analogue signals

Any 0/4 – 20 mA signals can be processed.

Additional temperature measurement

The UMG 96-PA module has an integrated temperature input for thermistors (PT 100/1000, KTY 83 or 84).

UMG 96-PA – energy measurement device

ENERGY MEASUREMENT DEVICE

4-in-1: Energy management, MID, power quality monitoring and RCM monitoring

Intuitive user guidance

High quality colour graphics display with user-friendly menu guidance.

Peripherals

Additional application options with comprehensive peripherals (three digital inputs and outputs and an analogue output).

MID measurement

Tamper-proof and legally secure acquisition of energy data.

Measurement of current and voltage parameters

Acquisition of current and voltage values in different forms of networks, TN and TT networks, with 600 V CAT III overvoltage category.

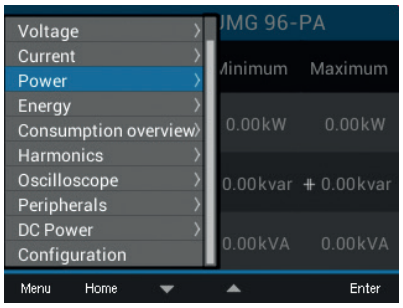

Colour graphics display

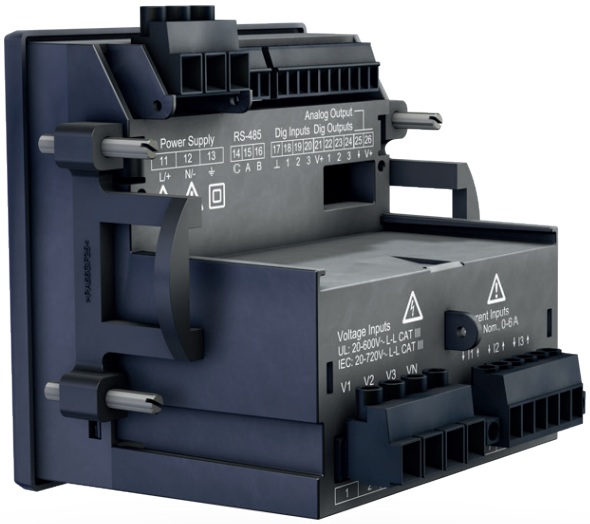

UMG 96-PA basic device without module

Janitza®

UMG 96-PA – energy measurement device

UMG 96-PA basic device

General

Accuracy of measurement with voltage, current	0.2%
Accuracy of measurement with active energy (kWh, .../5 A)	Class 0.2S
Accuracy class	B

Inputs and outputs

Number of digital inputs and outputs	3 each
Analogue output	1

RMS - momentary values, e.g.:

Current, voltage, frequency	•
Effective, reactive and apparent power	•
Power factor	•

Energy measurement

Active, reactive and apparent energy	•
Number of tariffs	HT / LT

Recording of the mean values, e.g.:

Voltage, current / live and maximum	•
Active, reactive and apparent power / present and maximum	•
Frequency / present and maximum	•

Measurement of the power quality

Harmonics per order / current and voltage	1.–25. (with MID)
Harmonics per order / current and voltage	1.–40. (without MID)
Distortion factor THD-U / THD-I in %	•
Current and voltage, positive, zero and negative sequence component	•

Measured data recording

Memory (Flash)	4 MB
Mean, minimum, maximum values	•

Interface / protocol

RS485 / Modbus RTU	•

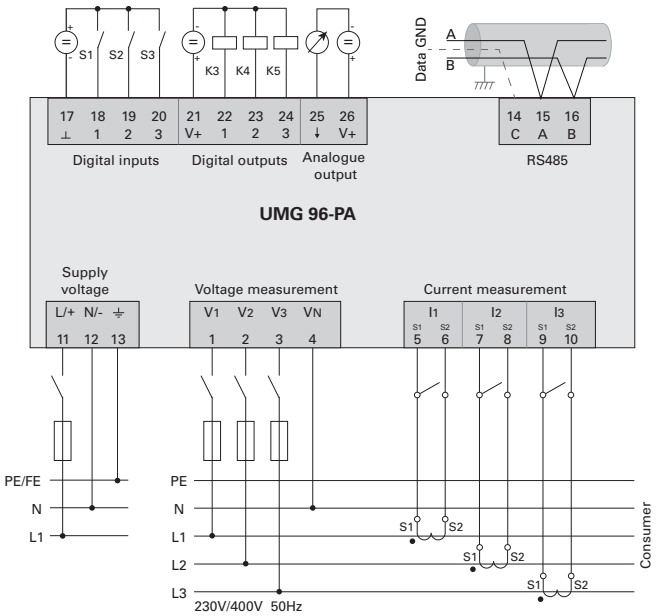

UMG 96-PA connection example

Programming / threshold values / alarm management

Comparator (2 Groups with 3 comparators each)	•

Measured voltage input — 3 x

Overvoltage category	600 V CAT III
Metering range, voltage L-N, AC (without transformer)	0 - 600 Vrms (± 10%)
Metering range, voltage L-L, AC (without transformer)	0 - 1040 Vrms (± 10%)
Frequency measuring range	45 to 65 Hz
Sampling rate per channel (50 / 60 Hz)	8.33 kHz
Measurement in quadrants	4
Networks	TN, TT

Measured current input — 3 x

Rated current	1 / 5 A
Overvoltage category	300 V CAT II
Sampling rate	8.33 kHz

Mechanical properties

Net weight (with attached connectors)	approx. 250 g / approx. 0.55 lb)
Device dimensions in mm (W x H x D) Device dimensions in inch (W x H x D)	96 x 96 x 86 3.78 x 3.78 x 3.39
Protection class per EN 60529 (with sealing = IP54)	Front IP40 / back IP20
Assembly per IEC EN 60999-1 / DIN EN 50022	Front panel installation

Environmental conditions

Temperature range, operation	K55 (–10 to +55 °C / +131 °F)

Software GridVis® Basic*2 •

Additional specifications for the UMG 96-PA^{MID}

Input voltage range	3 x 57/100 to 3 x 277/480 V
Overvoltage category	300 V CAT III
Current range	0,005 to 6 A
Nominal frequency	50 Hz
Accuracy class	B according to EN 50470-1
Pulse value of the S0 interface	– without transformer: 10000 Imp/kWh – automatic adjustment of the pulse value using measurement transducers
S0 interface	digital output 1

For detailed technical information, please refer to the operation manual and the Modbus address list.

• = included

*2 Optional additional functions with the packages GridVis®-Professional, GridVis®-Service and GridVis®-Ultimate available.

UMG 96-PA basic device without MID	
90–277 V AC / 90–250 V DC, CAT III	**Item no. 52.32.001**
24–90 V AC / 24–90 V DC, CAT III	**Item no. 52.32.002**
UMG 96-PA basic device with MID	
90–277 V AC / 90–250 V DC, CAT III	**Item no. 52.32.003**

Janitza®

UMG 96-PA – energy measurement device

WE COMBINE...

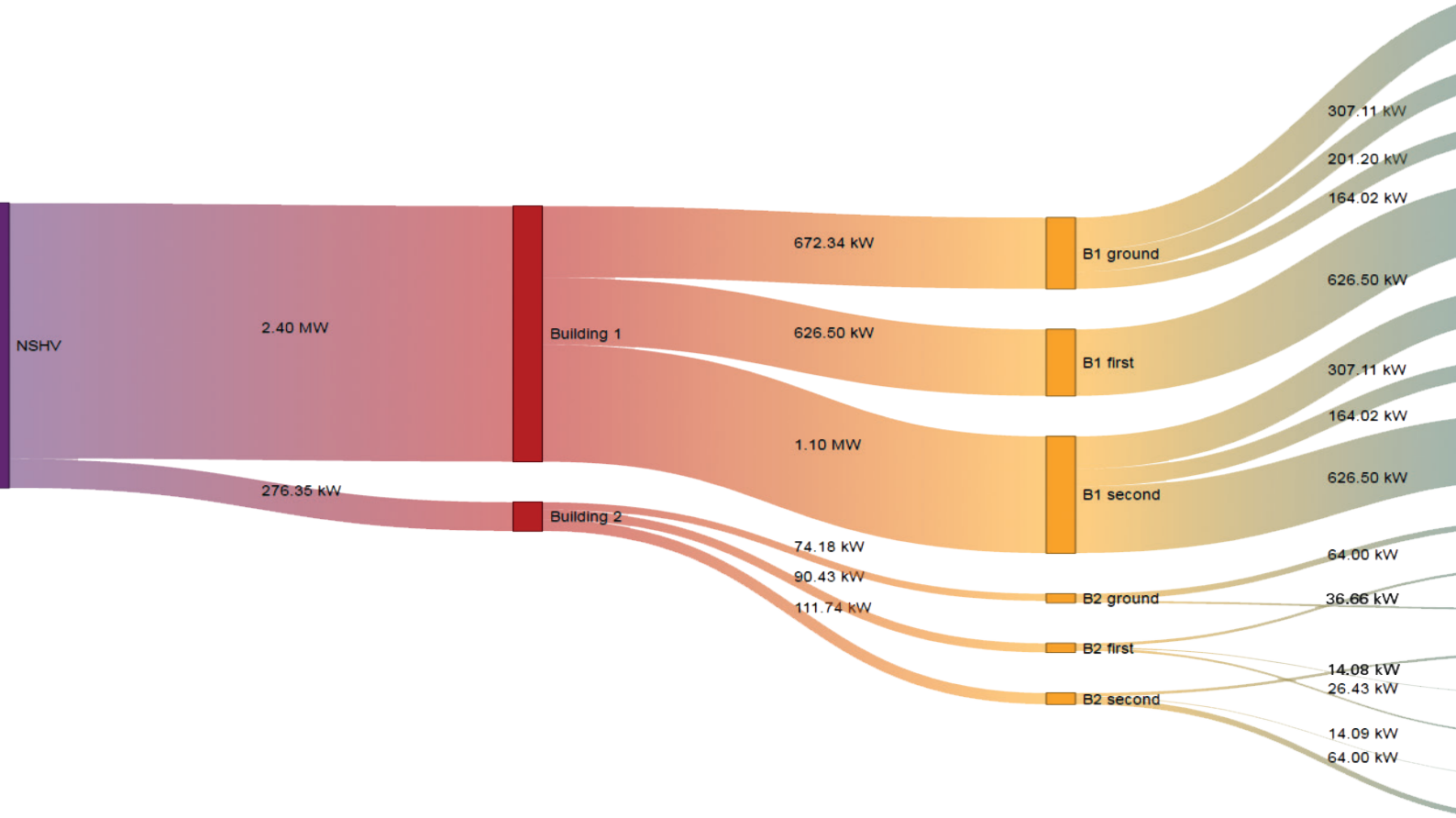

Network visualisation software ***GridVis®***

Visualisation
– Sankey diagrams (energy flow diagram)
– KPIs (key figures)
– Dashboards and widgets
– Topology overview

Reporting and documentation
– Energy calculation
– PQ report
– RCM report

Connectivity
– REST interface
– Data export
– Various external devices by means of Modbus TCP/RTU

Alarm management
– Fast and reliable signalling of fault states
– Escalation management

Some functions are only available with advanced GridVis® editions

Software

UMG 96-PA – energy measurement device

… WHAT COUNTS!



Four functions – one energy measurement device

Energy management system
– Continuous energy monitoring
– Identification of potential savings
– Reduction of energy costs
– Fulfilment of control & regulatory requirements

MID-compliant measurement
– Certified and tamper-proof MID measurement
– Legally secure accounting & energy acquisition
– Fulfilment of legal requirements

Power quality
– Secure, highly available power supply
– Avoidance of production stoppages
– Maximisation of operating times/preventative maintenance
– Prevention of product quality defects

Residual current monitoring (RCM)
– Continuous residual current monitoring
– Support for fire protection and personnel protection
– Effort reduction with the DGUV V3 tests
– Increased system availability

Hardware &

UMG 96-PA – Modules

Modules for the UMG 96-PA

Residual current input	
Analogue inputs	2 for residual current or analogue measurement
Rated current	30 mA rms
Triggering current	50 µA
Resolution	1 µA

Temperature measurement	**1 x**
Update time	1 second
Connectable sensors	PT100, PT1000, KTY83, KTY84

Current measurement I4	
Rated current	1 / 5 A
Overvoltage category	300 V CAT II
Power consumption	Approx. 0.2 VA (Ri = 5 mOhm)
Sampling rate	8.33 kHz

Interface	
Ethernet connection	RJ45
Module with Ethernet connection (RJ45)	Modbus TCP/IP, Modbus RTU over Ethernet Modbus Gateway



Module without Ethernet connection (RJ45)	**52.32.011**
Module with Ethernet connection (RJ45)	**52.32.010**

Both modules can be used in connection with the UMG 96-PA, item no. 52.32.001 and 52.32.002.

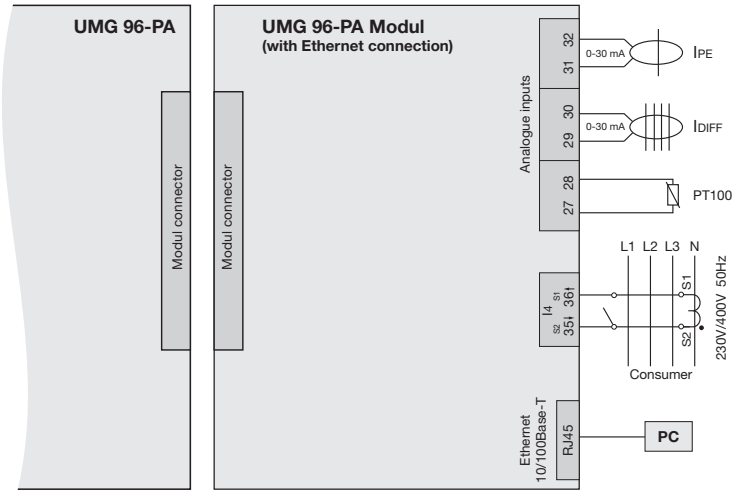

UMG 96-PA modul connection example

Smart Energy & Power Quality Solutions

Janitza electronics GmbH
Vor dem Polstück 6 | 35633 Lahnau
Germany

Phone: +49 6441 9642-0
Fax: +49 6441 9642-30
info@janitza.com | www.janitza.com

Sales partner

optec
energie ist messbar

Optec AG | Guyer-Zeller-Strasse 14 | CH-8620 Wetzikon ZH

Telefon: +41 44 933 07 70 | Telefax: +41 44 933 07 77
E-Mail: info@optec.ch | Internet: www.optec.ch

Item no.: 33.03.766 • Doc. no.: 2.500.135.4 • Version 05/2019 • Subject to technical alterations.
The current version of the brochure is available at www.janitza.com.

Janitza®