www.janitza.com

Plug-in current transformer

CTB Low-Power series (../333 mV)

User manual / Mounting instructions



Doc. no.: 2.204.055.1.a Date: 12/2024

Janitza electronics GmbH
Vor dem Polstück 6
35633 Lahnau | Germany
Support: +49 6441 9642-22
info@janitza.com | www.janitza.com

Janitza®



CTB Low-Power series (../333 mV)

Doc. no.: 2.204.055.1.a
Date: 12/2024
The German version is the original edition of the documentation

Subject to technical alterations.

The contents of our documentation have been compiled with great care and reflect the current state of the information available to us. Nonetheless, we wish to point out that updates of this document are not always possible at the same time as technical refinements are implemented in our products. Please see our website under www.janitza.com for the current version.
Please see our website under www.janitza.com for the current version.

TABLE OF CONTENTS

1. Information on the devices and the user manual 4

1. 1 Disclaimer 4
1. 2 Copyright notice 4
1. 3 Subject to technical alterations 4
1. 4 About this user manual 4
1. 5 Defective device/disposal 5

2. Safety 6

2. 1 Display of warning notices and safety information 6
2. 2 Hazard levels 6
2. 3 Product safety 6
2. 4 Dangers when handling the device 7
2. 5 Electrically qualified personnel 8
2. 6 Warranty in the event of damage 8
2. 7 Safety information for handling current transformers 8

3. Product description 10

3. 1 Principle of operation 10
3. 2 Incoming goods inspection 10
3. 3 Intended use 10
3. 4 Conformity declaration 10

4. Mounting 11

4. 1 Mounting instructions 11

5. Installation 13

5. 1 Measurement circuit 13

6. Technical data 14

6. 1 General technical data 14
6. 2 Type-specific technical data - Output signals and accuracy classes 15
6. 3 Type-specific technical data - Designs 16
6. 4 Dimensional drawings 17

1. Information on the devices and the user manual

1.1 Disclaimer

Compliance with the usage information for the devices is a prerequisite for safe operation and attaining the stated performance characteristics and product features.

Janitza electronics GmbH assumes no liability for bodily injury, material damage or financial losses which result from disregard of the usage information.

Ensure that the usage information for the products is legible and accessible.

1.2 Copyright notice

© 2024 - Janitza electronics GmbH - Lahnau. All rights reserved.

Any reproduction, processing, distribution or other use of this usage information, in whole or in part, is prohibited.

All trademarks and the rights arising from them are the property of the respective owners of these rights.

1.3 Subject to technical alterations.

- Make sure that your device matches the user manual.
- This user manual is valid for the low-power current transformers (plug-in current transformers) of the CTB series.
- First make sure you have read and understood the usage information accompanying the product.
- Keep the usage information associated with the product available for the entire service life and pass it on to any possible subsequent users.
- Find out about device revisions and the associated modifications of the usage information associated with your product at www.janitza.com.

1.4 About this user manual

If you have questions, suggestions or ideas for improvement of the user manual, please let us know via email at: info@janitza.com.

INFORMATION

This user manual describes the low-power current transformers (plug-in current transformers) of the CTB series and provides information on the operation of the devices.

Observe any additional usage information and, in particular, the safety information in this user manual.

INFORMATION

Our usage information uses the grammatical masculine form in a gender-neutral sense! This form always refers equally to women, men and diverse. In order to make the texts more readable, distinctions are not made. We ask for your understanding for these simplifications.

1.5 Defective device/disposal

Before sending **defective devices, modules or components** back to the manufacturer for testing:
· Contact the manufacturer's Support department.
· Send devices, modules or components complete with all accessories.
· When doing so, please bear the terms for transportation in mind.

INFORMATION

· Before assembly and commissioning, check the device for possible transport damage.
· Do not put defective devices into service!
· Please return defective or damaged devices, modules or components to Janitza electronics GmbH in accordance with the shipping instructions for air or road freight (complete with accessories).

Do not attempt to open or repair the device (the component) on your own because otherwise all warranty claims become invalid!

For the **disposal** of the device/component, please observe national regulations! Dispose of individual parts, as applicable, depending on their composition and existing country-specific regulations, e.g. as
· Electronic waste,
· Batteries and rechargeable batteries,
· Plastics,
· Metals.
Engage a certified disposal company to handle scrapping as needed

2. Safety

The chapter on Safety contains information which must be observed to ensure your personal safety and avoid material damage.

2.1 Display of warning notices and safety information

The warning notices shown below
· are found throughout the usage information.
· can possibly be found on the devices themselves.
· indicate potential risks and hazards.
· underscore aspects of the information provided that clarifies or simplifies procedures.



This additional symbol on the device (module/component) itself indicates an electrical hazard that can lead to severe injury or death.





This general warning symbol draws attention to a possible risk of injury. Be certain to observe all of the information listed under this symbol in order to avoid possible injury or even death.

2.2 Hazard levels

Warning and safety information is marked by a warning symbol, and the hazard levels are shown as follows, depending on the degree of hazard:

⚠ DANGER
Warns of an imminent danger which, if not avoided, results in serious or fatal injury.

⚠ WARNING
Warns of a potentially hazardous situation which, if not avoided, could result in serious injury or death.

⚠ CAUTION
Warns of an immediately hazardous situation which, if not avoided, can result in minor or moderate injury.

ATTENTION
Warns of an immediately hazardous situation which, if not avoided, can result in material or environmental damage.

ⓘ ***INFORMATION***

Indicates procedures in which there is **no** hazard of personal injury or material damage.

2.3 Product safety

The devices reflect current engineering practice and accepted safety standards, but hazards can arise nonetheless.

Observe the safety regulations and warning notices. If notices are disregarded, this can lead to personal injury and/or damage to the product.

Every type of tampering with or use of the devices,
· which goes beyond the mechanical, electrical or other operating limits can lead to personal injury and/or damage to the product;
· constitutes “misuse” and/or “negligence” under the product’s warranty and thus voids the warranty for any possible resulting damage.

Read and understand the user manual before assembling, installing, operating, maintaining or using the devices.

· Only operate the devices when in perfect condition and in compliance with this user manual and the usage information that is included.
· Send defective devices back to the manufacturer in compliance with proper transport conditions.
· Retain the user manual throughout the service life of your product and keep it at hand for consultation.

When using the device, component or module, also observe the legal and safety regulations for your system that are applicable for the respective use case.

2.4 Dangers when handling the device

When operating electric devices, components or modules, it is unavoidable for certain parts of these devices to conduct hazardous voltage. Consequently, severe bodily injury or material damage can occur if they are not handled properly.

When handling the devices, always observe the following:

· do not exceed the limit values specified in the user manual and on the rating plate! This must also be observed during testing and commissioning!
· Take note of the safety and warning notices in all usage information that belongs to the device, components or modules!
· Applicable laws, standards and regulations!
· The state of the art and current engineering practice at the point in time of installation.

⚠ WARNING

Disregarding the connection conditions of the Janitza measurement devices, modules or components can lead to injuries or even death or to material damage!

· Do not use Janitza meters, modules or components for critical switching, control or protection applications where the safety of persons and property depends on this function.
· Do not carry out switching operations with the Janitza measurement devices, modules or components without prior inspection by your system manager with specialist knowledge! In particular, the safety of persons, material assets and the applicable standards must be taken into account!

⚠ WARNING

Risk of injury due to electrical voltage!
Severe bodily injury or death can result! Therefore please abide by the following:

· **Switch off your installation before commencing work! Secure it against being switched on! Check to be sure it is de-energized! Ground and short circuit! Cover or block off adjacent live parts!**
· **During operation and troubleshooting (especially for DIN rail devices), check your system for dangerous voltages and switch these off if necessary!**
· **Wear protective clothing and protective equipment in accordance with applicable guidelines when working on electrical systems!**
· **Before making connections to the device/the component, ground the device by means of the ground wire connection, if present.**
· **Do not touching bare or stripped leads that are energized! Equip stranded conductors with wire ferrules!**
· **Hazardous voltages can be present in all circuitry parts that are connected to the power supply.**
· **Protect your wiring, cables and devices with a suitable line circuit breaker/fuse (for dimensioning, see the documentation for the device)!**
· **Never switch off, remove or tamper with safety devices!**
· **There can still be hazardous voltages present in the device or in the component even after it has been disconnected from the supply voltage (capacitor storage).**
· **Only connect screw terminals with the same number of poles and design!**
· **Do not exceed the limit values specified in the user manual and on the rating plate; this must also be observed during testing and commissioning.**
· **Take note of the safety and warning notices in the documents that belong to the device!**

2.5 Electrically qualified personnel

To avoid bodily injury and material damage, only electrically qualified personnel are permitted to work on the devices and their components, modules, assemblies, systems and current circuits who have knowledge of:

· The national and international accident prevention regulations.
· Safety technology standards.
· Installation, commissioning, operation, disconnection, grounding and marking of electrical equipment.
· The requirements concerning personal protective equipment.

Electrically qualified persons within the scope of the technical safety information of all usage information associated with the device and its components (modules) are persons who can furnish proof of qualification as an electrically skilled person.

2.6 Warranty in the event of damage

Any unauthorized tampering with or use of the device, component or module constitutes “misuse” and/or “negligence” under the product’s warranty and thus voids the warranty for any possible resulting damage. In this regard, please take note of section “3.3 Intended use” on page 10.

⚠ WARNING

Warning against unauthorized manipulation or improper use of the device or its components (modules)!
Opening, dismantling or unauthorized manipulation of the device and its components which goes beyond the mechanical, electrical or other operating limits indicated can lead to material damage or injury, up to and including death.

· **Only electrically qualified personnel are permitted to work on the devices and their components (modules), assemblies, systems and current circuits.**
· **Always use your devices or components (modules) only in the manner described in the associated usage information.**
· **If there is discernible damage, send the device or the component (module) back to the manufacturer!**

2.7 Safety information for handling current transformers

The field of transformer technology groups the totality of all devices that perform the function of a **current, voltage** or **measuring transformer** together as **sensors**.

In the usage information for our devices, modules and components, the terms **current transformer, voltage transformer** or **transformer** all refer to **sensors**.

A further distinction is made by the terms **CT (current transformer)** and **LP-CT (low-power current transformer)**:
The term **"current transformer"** is used for special transformers for the primary-proportional conversion of currents of large magnitudes to directly measurable, **smaller current values**. In contrast, the term **"LP current transformer"** is used for special transformers for the primary-proportional conversion of currents of large magnitudes to directly measurable **voltage values (low power)**.

Current transformers and **LP current transformers** provide safe galvanic isolation between the primary circuit and the measurement circuit due to their design and their physical operating principle. For Janitza measurement devices, modules and components, use only **"transformers for measuring purposes"** which are suitable for the energy monitoring of your system!

This manual only describes the handling of current transformers for the primary-proportional conversion of currents of large magnitudes to directly measurable, **lower voltage values (low power)**.

LP current transformers require end-to-end double insulation to mains or measuring circuits in accordance with IEC 61010-1.

⚠ WARNING

Damage to the device or your system even including life-threatening injuries due to a short circuit.
Insufficient insulation of equipment (LP current transformers) at the current measurement inputs with respect to the circuits can lead to life-threatening voltages or damage to your device or system.
- **Observe the information and specifications of your LP current transformer regarding insulation.**
- **Ensure end-to-end double insulation of your LP current transformers to mains and measuring circuits!**

⚠ CAUTION

Transmission errors and material damage due to electromagnetic interference!
The recommended maximum cable length to the low-power current transformers is 5 m. Interference on the measurement cables can lead to measurement errors or damage!
- **Shield cables as needed in dependence on the environmental conditions.**
- **Install the shield connected at one end in the switchboard cabinet.**

3. Product description

3.1 Principle of operation

· A proportional conversion of currents of large magnitude to directly measurable, lower voltages takes place, i.e. a primary measured variable is adapted to suit the nominal input values of connected measurement devices.
· A low-power current transformer provides an extra-low voltage as an output signal.
· Due to the principle of the current transformer, there is a safe galvanic isolation between the primary circuit and the measurement circuit.
· Additional protection of the secondary circuit against excessive currents is ensured due to the physically induced saturation phenomenon of the core material.

3.2 Incoming goods inspection

Safe and trouble-free operation of the current transformer presupposes proper transport, storage, set-up and assembly as well as operation and maintenance in addition to compliance with the safety information and warning notices.

Exercise due caution when unpacking and packing the device, do not use force and only use suitable tools. Check the following:
· the current transformer by visually checking that it is in flawless mechanical condition.
· the scope of delivery for completeness before beginning with assembly and installation.

If it must be assumed that safe operation is no longer possible, immediately put the device with components out of service and secure against unintentional startup.

Disconnect the system (devices, as applicable modules and components also)!
1. **Secure it against being switched on!**
2. **Check to be sure it is de-energized!**
3. **Earth and short circuit the system (devices, as applicable modules and components also)!**
4. **Cover or block off adjacent live parts!**

Safe operation is impossible if the device with components, for example:
· has visible damage,
· no longer works despite an intact mains supply,
· was subjected to extended periods unfavorable conditions (e.g. storage outside of the permissible climate conditions without adaptation to the room climate, condensation, etc.) or transport stress (e.g. falling from an elevated position, even without visible external damage, etc.).

3.3 Intended use

The current transformer is
· only intended for use in the industrial sector.
· intended for installation in switchboard cabinets and small distribution boards.
· designed as an indoor meter.

The current transformer is **not** intended
· for installation in vehicles! Use of the device in non-stationary equipment constitutes an exceptional environmental condition and is only permissible by special agreement.
· In environments with harmful oils, acids, gases, vapors, dusts, radiation, etc.

Safe and trouble-free operation of the device with components requires proper transport, storage, assembly, installation, operation and maintenance.

INFORMATION

The CTB series current transformers have UL approval.

3.4 Conformity declaration

The laws, standards and directives applied by Janitza electronics GmbH for the devices can be found in the declarations of conformity at www.janitza.com.

4. Mounting

4.1 Mounting instructions

1. Use of the secondary terminals (CAGE CLAMP®)

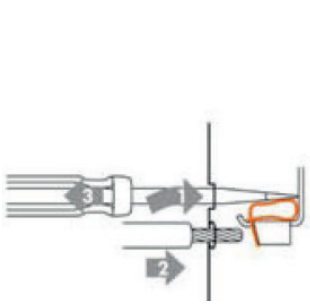
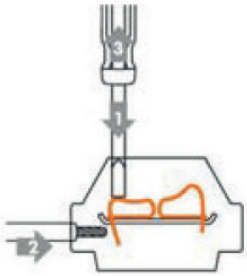



2. Mounting the fastening screws




3. Mounting on copper rail and round conductor

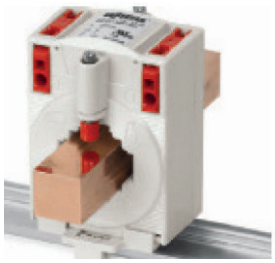
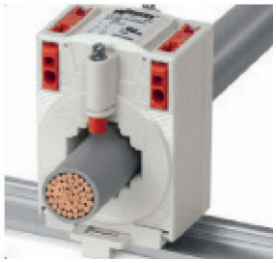

4. Mounting on 35 mm DIN mounting rail with snap-on mounting (CTB 31.35 and CTB 41.35 only)



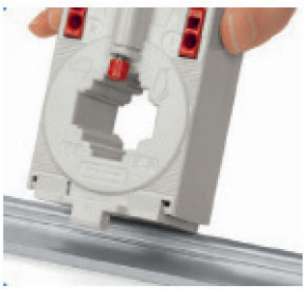


5. Mounting on a mounting plate

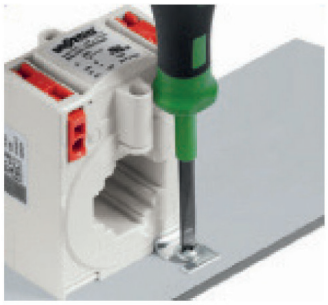

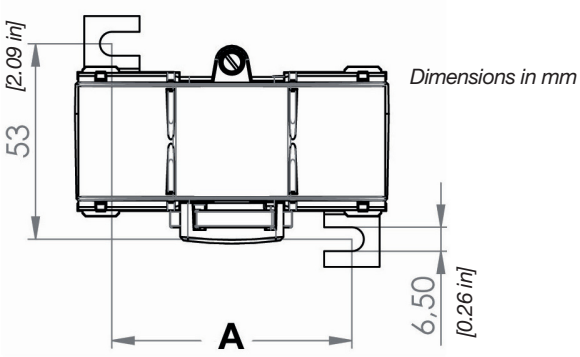

	CTB 31.35	CTB 41.35	CTB 51.35	CTB 61.35	CTB 81.35	CTB 101.35
Dimension "A" [mm / in]	40 / 1.57	40 / 1.57	65 / 2.56	65 / 2.56	95 / 3.74	95 / 3.74

Tab. Dimensions for mounting the device on a mounting plate.

INFORMATION

The figures are provided as an aid to describe assembly. The actual size and color may vary.

5. Installation

· Ensure there is a safe working environment during assembly, maintenance and installation work. Disconnect the power supply of the primary conductor and secure it against unintentional reconnection.

· Install the current transformer on the primary conductor.

· To do so, guide the primary conductor (Cu rail or round conductor) through the window opening of the current transformer housing. The window opening is marked with "K-P1" or "L-P2".

· Mount the device either directly on the primary conductor or on a mounting plate. Use the fasteners included in the scope of delivery for this purpose. Fastening
  - can be carried out directly on the primary conductor by screwing the fastening screws into the screw bosses located on the transformer housing or using the optionally available snap-on mounting.
  - can be carried out on the mounting plate using the foot brackets.

· Current transformers of types CTB 31.35 and CTB 41.35 can also be mounted on a 35 mm (1.38 in) DIN mounting rail with a snap-on mounting available as an accessory.

· Connect the secondary terminals observing the markings "k-S1" and "l-S2".

⚠ DANGER

Danger of electric shock!
Electric shocks lead to serious injuries, including death.
· Disconnect your system from the power supply before mounting and connecting the device!
· Secure it against being switched on!
· Check to be sure it is de-energized!
· Ground and short circuit!
· Cover or block off adjacent live parts!
· The installation must only be carried out by qualified personnel with electrical training!

5.1 Measurement circuit

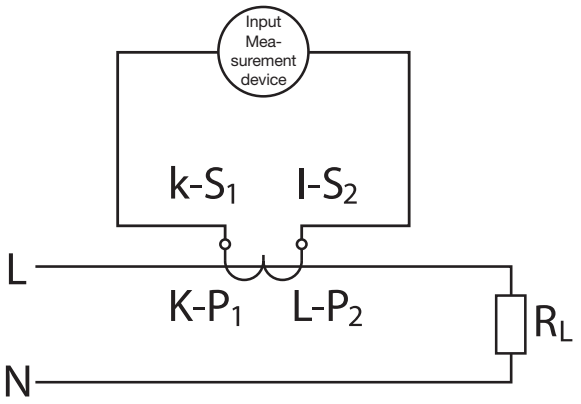

6. Technical data

ATTENTION
In addition to the following technical data, pay particular attention to the information on the rating plate of your device!

6.1 General technical data

Input	
Primary rated current I_{pr} (type-dependent)	see chapter 6.2 on page 15
Thermal rated continuous current I_{cth}	1.2 x I_{pr} (> 2000 A: 1.0 x I_{pr})
Thermal rated short-time current I_{th}	60 x I_{pr} / 1 s (max. 100 kA)
Rated surge current I_{dyn}	2.5 x I_{th}
Rated frequency f_R	50 ... 60 Hz

Tab. Technical data - Input

Output	
Secondary Rated voltage	see chapter 6.2 on page 15
Accuracy class	see chapter 6.2 on page 15
Overcurrent limiting factor F_S	FS5 or FS10

Tab. Technical data - Output

Operating conditions	
Ambient temperature	-5 … +50 °C (23 ... 122 °F)
Storage temperature	-25 … +70 °C (-13 ... 158 °F)
Relative humidity (non-condensing)	5 … 85%
Operating elevation	Up to 1000 m (1093.61 yd)

Tab. Technical data - Operating conditions

Isolation properties	
Rated isolation level U_m in accordance with IEC 61010-1 under the following conditions: - Overvoltage category III - Pollution degree 2 - Heterogeneous electrical field	1.2 / 6 / - kV
Surge voltage strength in accordance with DIN EN 61439-1	12 kV (1.2/50 µs)
Insulation class	E

Tab. Technical data - Isolation properties

Safety	
Protection level	IP20
Housing material	PC
UL housing classification of these types	UL94-V0
Overcurrent limiting factor F_S	FS5 or FS10

Tab. Technical data - Safety

Connection	
Primary conductor feedthrough	see chapter 6.4 on page 16
Connection technology, secondary	CAGE CLAMP®
Connection cross section, secondary	2.5 - 4 mm² / AWG 14-12
Strip length	9 - 10 mm (0.35 - 0.39 in)

Tab. Technical data - Connection

Standards complied with
· EN 61869-1 · EN 61869-2 · IEC 61010-1 · EN 63000

Tab. Technical data - Standards complied with

The latest edition of the aforementioned documents, including all amendments, applies.

6.2 Type-specific technical data - Output signals and accuracy classes

Current transformer type	Primary rated current [A]	Secondary rated voltage (mV)	Accuracy class
CTB 31.35	150	333 mV	0.5
CTB 31.35	200	333 mV	0.5
CTB 31.35	250	333 mV	0.5
CTB 31.35	300	333 mV	0.5
CTB 31.35	400	333 mV	0.5
CTB 31.35	500	333 mV	0.5
CTB 31.35	600	333 mV	0.5
CTB 41.35	500	333 mV	0.5
CTB 41.35	600	333 mV	0.5
CTB 41.35	800	333 mV	0.5
CTB 41.35	1000	333 mV	0.5
CTB 51.35	1000	333 mV	0.5
CTB 51.35	1250	333 mV	0.5
CTB 61.35	1250	333 mV	0.5
CTB 61.35	1500	333 mV	0.5
CTB 81.35	1500	333 mV	0.5
CTB 81.35	1600	333 mV	0.5
CTB 81.35	2000	333 mV	0.5
CTB 101.35	2500	333 mV	0.5

Tab. Type-specific technical data - Primary rated current and rated power

6.4 Type-specific technical data - Designs

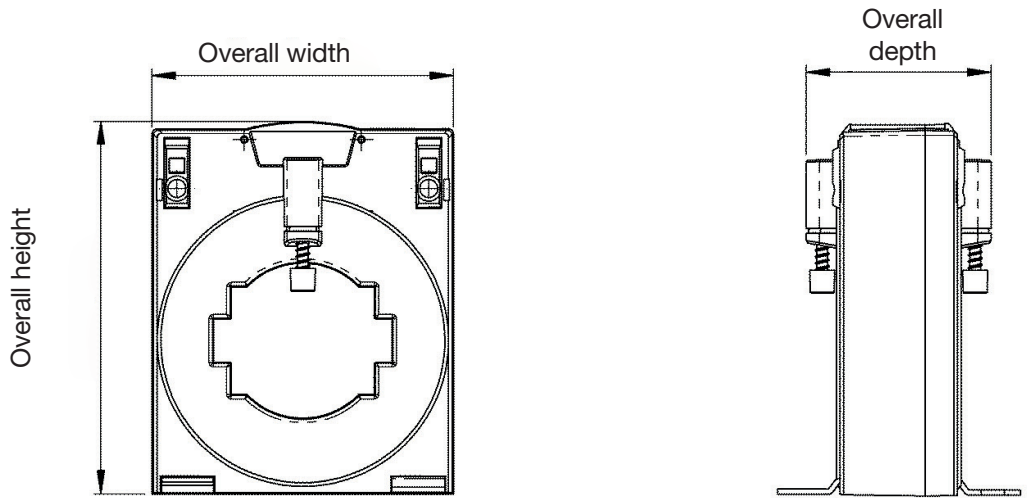

	Type CTB 31.35	Type CTB 41.35	Type CTB 51.35	Type CTB 61.35	Type CTB 81.35	Type CTB 101.35
Primary conductor feedthrough						
Rail 1 [mm / in]	30 x 10 / 1.18 x 0.39	40 x 10 / 1.57 x 0.39	50 x 12 / 1.97 x 0.47	63 x 10 / 2.48 x 0.39	80 x 10 / 3.15 x 0.39	100 x 10 / 3.94 x 0.39
Rail 2 [mm / in]	25 x 12 / 0.98 x 0.47	30 x 15 / 1.18 x 0.59	40 x 30 / 1.57 x 1.18	50 x 30 / 1.97 x 1.18	60 x 30 / 2.36 x 1.18	80 x 30 / 3.15 x 1.18
Rail 3 [mm / in]	20 x 20 / 0.79 x 0.79	---	---	---	---	---
Round conductor [mm / in]	25.7 / 1.01	31.8 / 1.25	43.7 / 1.72	43.7 / 1.72	54.7 / 2.15	70 / 2.76
Dimensions						
Overall width [mm / in]	60 / 2.36	70 / 2.76	85 / 3.35	95 / 3.74	120 / 4.72	130 / 5.12
Overall height [mm / in]	80.9 / 3.19	91.15 / 3.59	105.25 / 4.14	114.86 / 4.52	134.66 / 5.3	147.49 / 5.81
Overall depth [mm / in]	52 / 2.05	52 / 2.05	52 / 2.05	52 / 2.05	52 / 2.05	52 / 2.05

Tab. Type-specific technical data

6.5 Dimensional drawings

INFORMATION

The dimensional drawings are not to scale! All dimensions in mm!

6.5.1 CTB 31.35

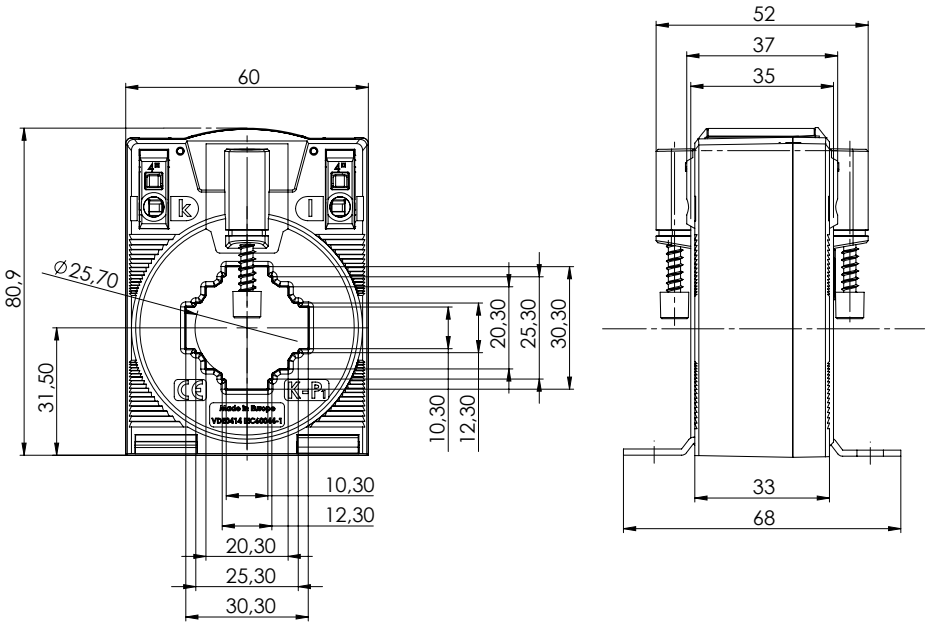

6.5.2 CTB 41.35

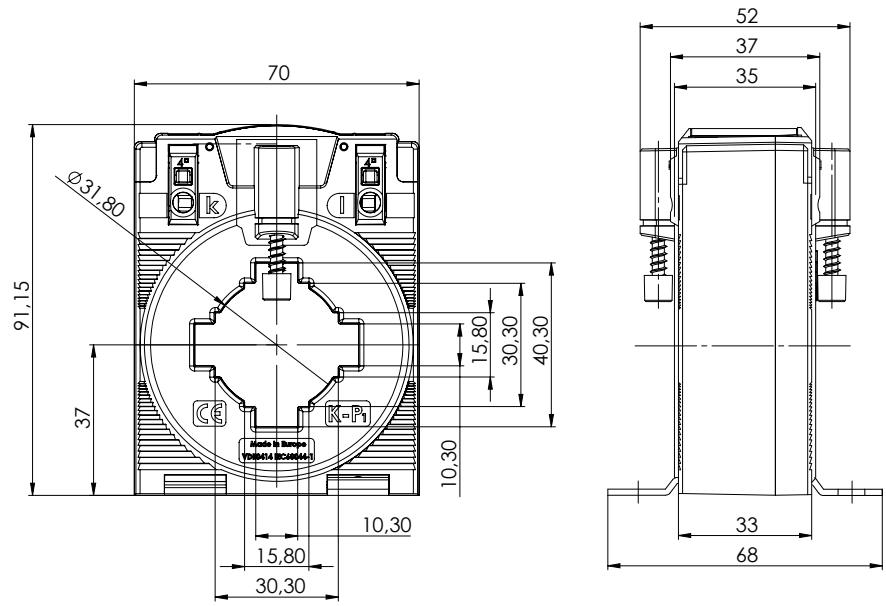

6.5.3 CTB 51.35

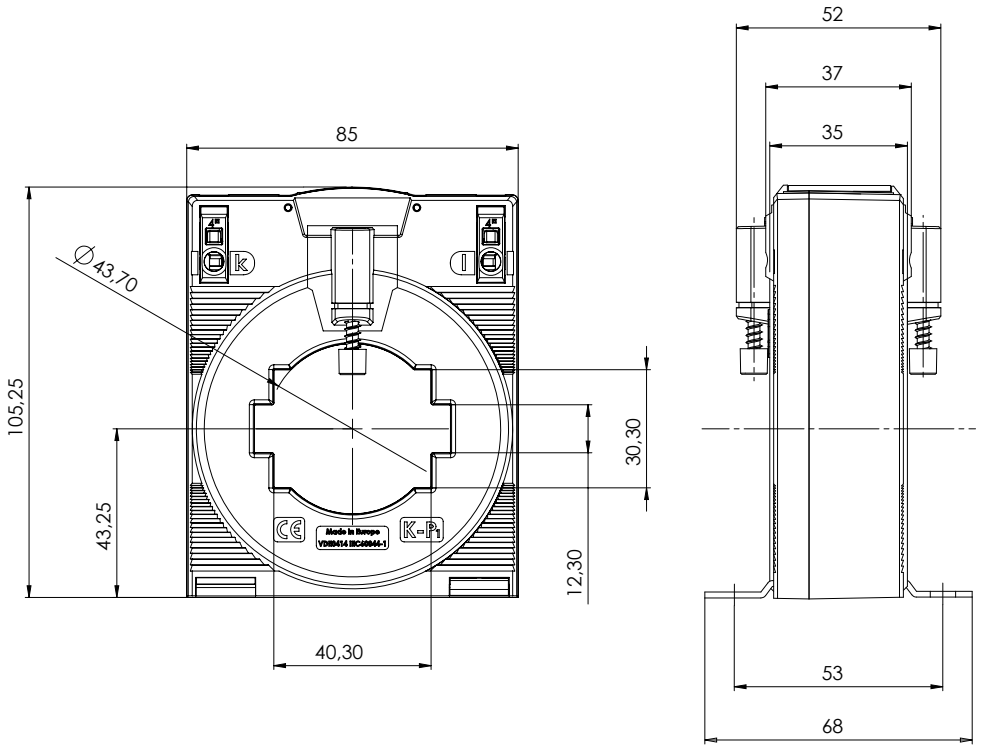

6.5.4 CTB 61.35

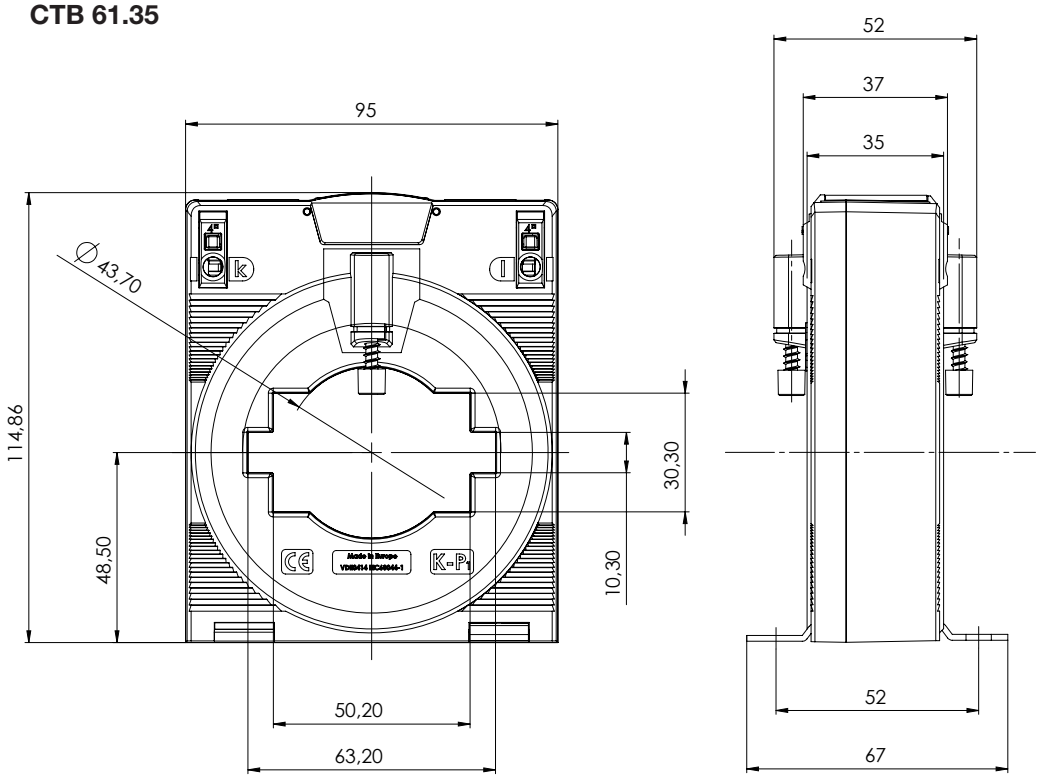

6.5.5 CTB 81.35

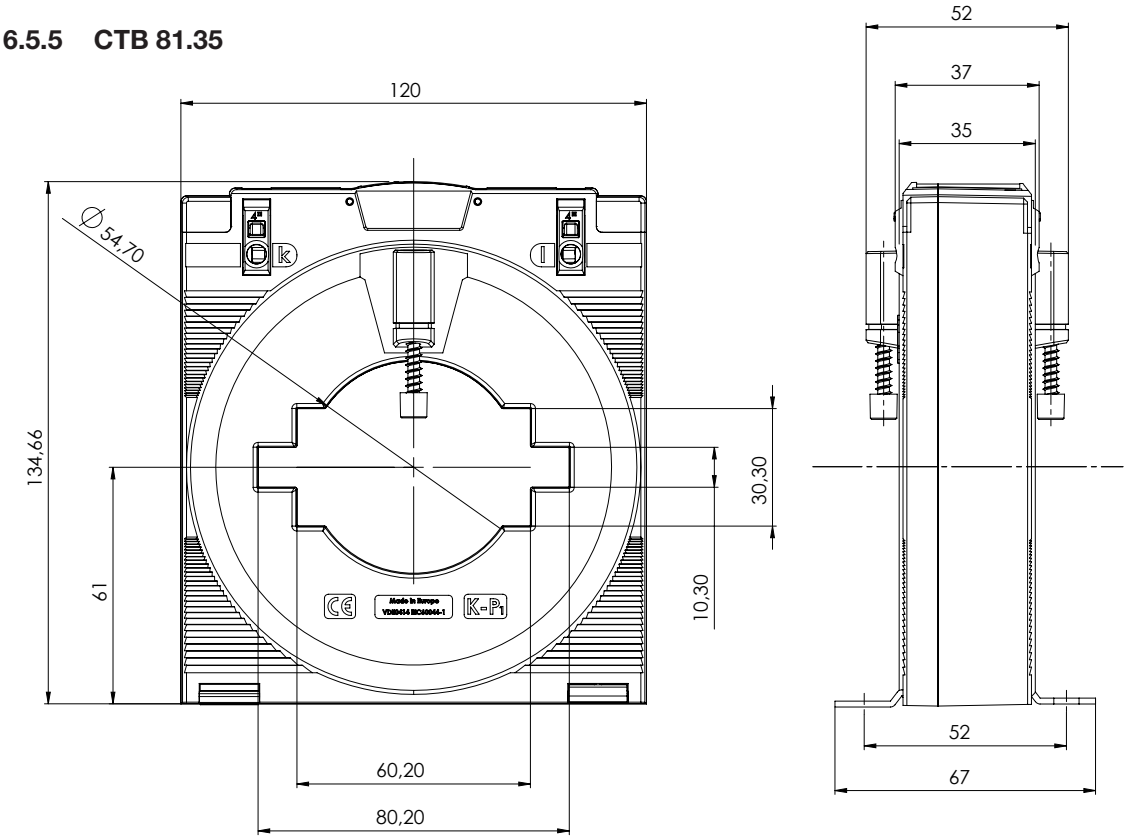

6.5.6 CTB 101.35

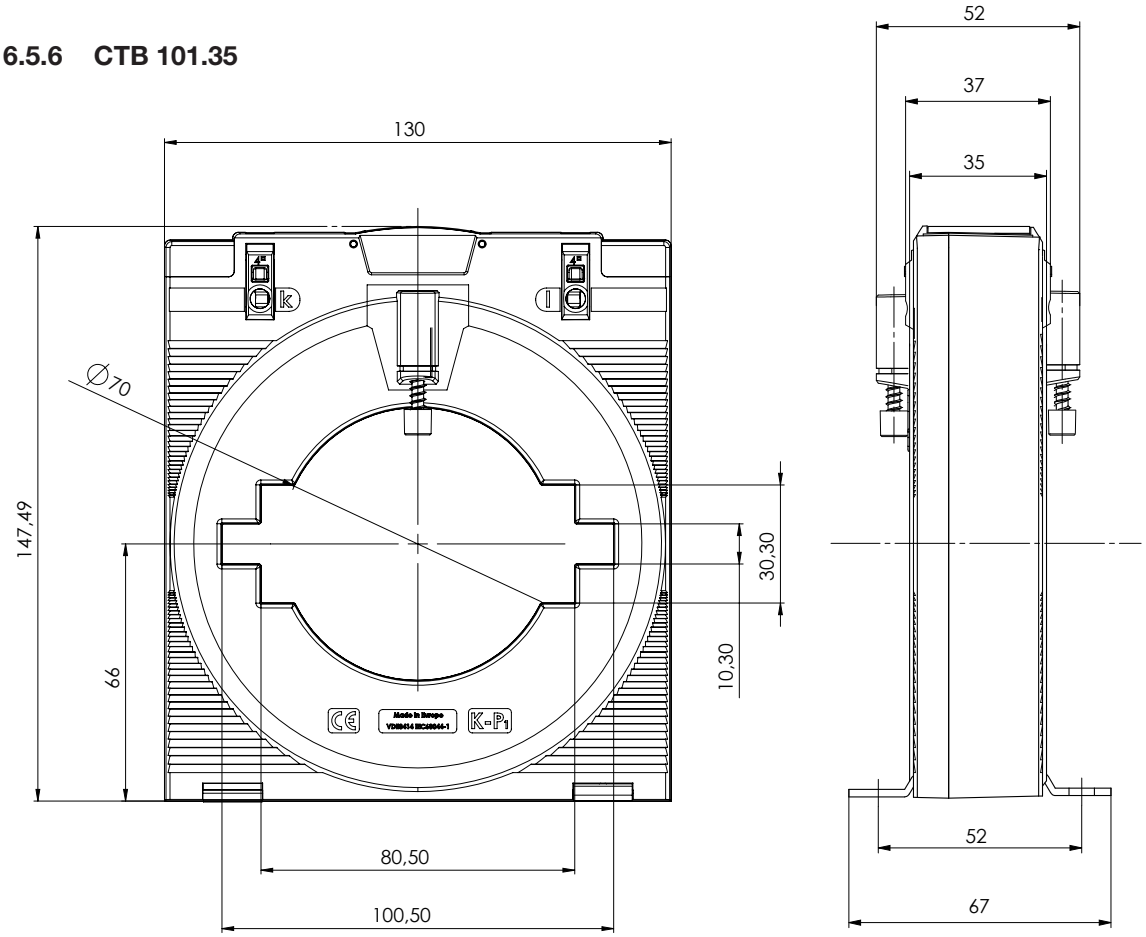

UK represented by:
Authorized Rep Compliance Ltd.
ARC House
Thurnham
Lancaster
LA2 0DT
UK

Janitza®

Janitza electronics GmbH
Vor dem Polstück 6 | 35633 Lahnau
Germany

Tel.: +49 6441 9642-0
info@janitza.com | www.janitza.com

Doc. no. 2.204.055.1.a | 12/2024 | Subject to technical alterations.
The current version of the document can be found in the download area at www.janitza.com.