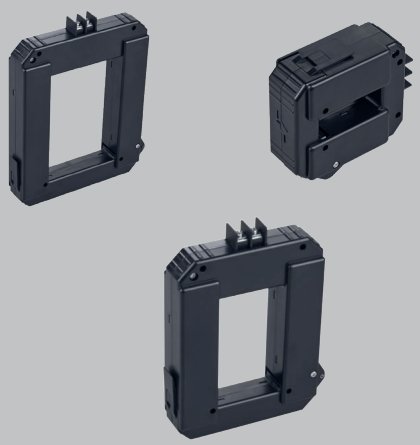

Doc. no. 2.204.048.1.c 12/2023

Split Core
Low Power Current Transformer

CT-BSC-021
CT-BSC-050
CT-BSC-080

Data sheet

Janitza electronics GmbH
Vor dem Polstück 6
35633 Lahnau, Germany
Support Tel. +49 6441 9642-22
info@janitza.com • www.janitza.com

Janitza®

Type	Primary current
CT-BSC-021-000-600	600 A



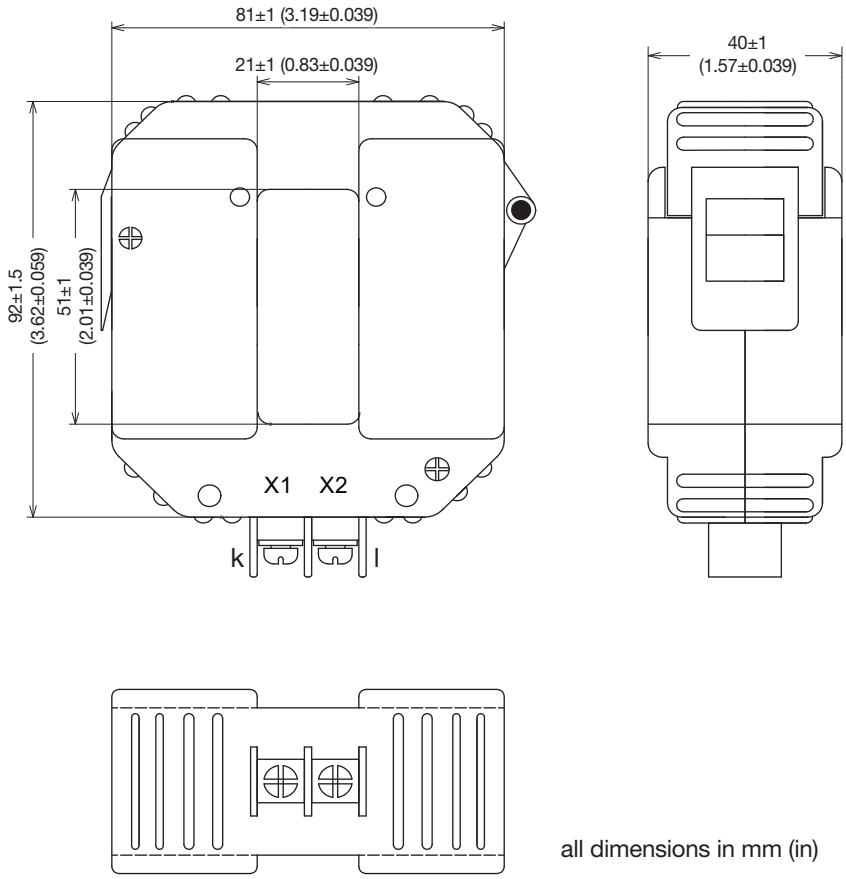

all dimensions in mm (in)

Specifications	Data
Phase error at nominal current	≤0.5°
Weight appr.	475 g (1.05 lb)
Output signal	333 mV
Connection	M4 Screw connection
Accuracy class	0.5
Frequency	50 - 60 Hz
Insulation voltage	4.0 kV/1mA/1min
Operating temperature	-40 °C to 65 °C (-40 °F to 149 °F)
Storage temperature	-45 °C to 85 °C (-49 °F to 185 °F)
Standards	ANSI C57.13, IEC61869-2, RoHS compliant
Case	Rigid housing case with UL 94 V-0 durable plastic
Insulation resistance	DC500V/100MΩ min
Carry out primary conductor	21 x 51 mm (0.827 x 2.01 in)

Type	Primary current
CT-BSC-050-000-1200	1200 A



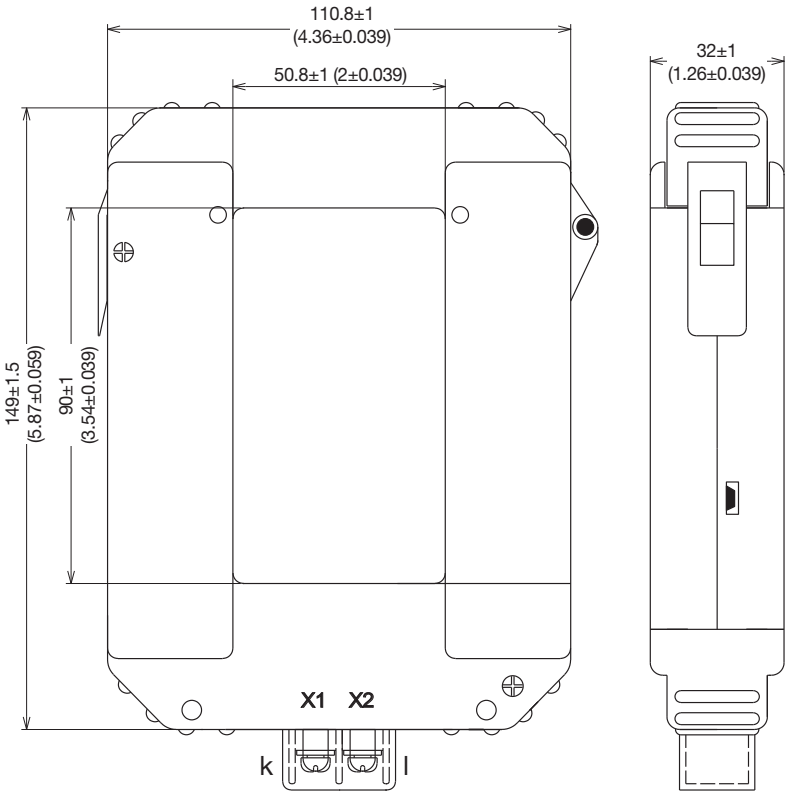

all dimensions in mm (in)

Specifications	Data
Phase error at nominal current	≤0.5˚
Weight appr.	770 g (1.70 lb)
Output signal	333 mV
Connection	M4 Screw connection
Accuracy class	0.5
Frequency	50 - 60 Hz
Insulation voltage	4.0 kV/1mA/1min
Operating temperature	-40 °C to 30 °C (-40 °F to 86 °F)
Storage temperature	-45 °C o 90 °C (-49 °F to 194 °F)
Standards	ANSI C57.13, IEC61869-2, RoHS compliant
Case	Rigid housing case with UL 94 V-0 durable plastic
Insulation resistance	DC500V/100MΩ min
Carry out primary conductor	50.8 x 90 mm (2 x 3.54 in)

Type	Primary current
CT-BSC-080-000-2500	2500 A



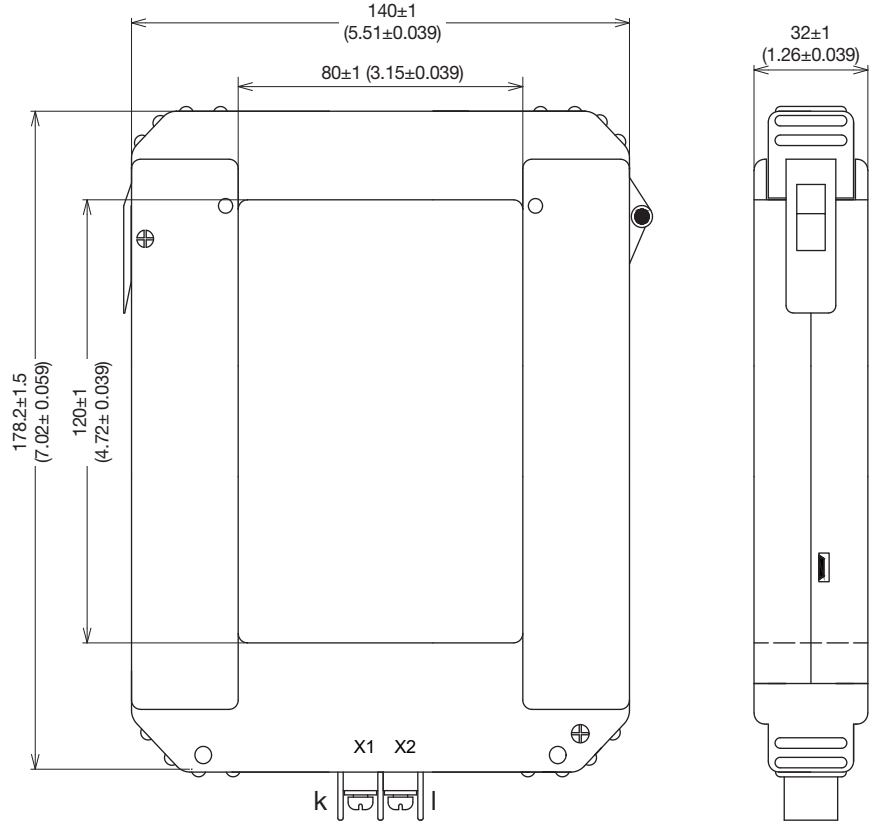

all dimensions in mm (in)

Specifications	Data
Phase error at nominal current	≤0.5°
Weight appr.	1090 g (12.4 lb)
Output signal	333 mV
Connection	M4 Screw connection
Accuracy class	0.5
Frequency	50 - 60 Hz
Insulation voltage	4.0 kV/1mA/1min
Operating temperature	-40 °C to 30 °C (-40 °F to 86 °F)
Storage temperature	-45 °C to 90 °C (-49 °F to 194 °F)
Standards	ANSI C57.13, IEC61869-2, RoHS compliant
Case	Rigid housing case with UL 94 V-0 durable plastic
Insulation resistance	DC500V/100MΩ min
Carry out primary conductor	80 x 120 mm (3.15 x 4.72 in)

OVERVIEW & ART.NO.

Type	Art. no.	Primary current	Carry out primary conductor mm (in)	Cable lenght m (in)	Accuracy class
CT-BSC-021-000-600	1503347	600 A	21 x 51 (0.826 x 2.00)	M4 Screw connection	0.5
CT-BSC-050-000-1200	1503348	1200 A	50.8 x 90 (2,00 x 3.54)	M4 Screw connection	0.5
CT-BSC-080-000-2500	1503349	2500 A	80 x 120 (3.15 x 4.72	M4 Screw connection	0.5

CONNECTION

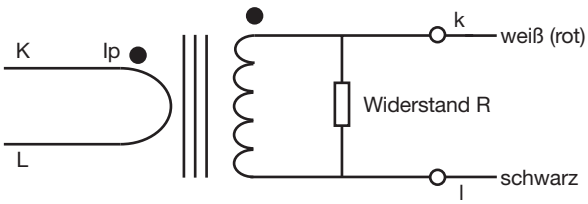

$$V = \frac{I \times R}{T_e}$$

$$V_L = V_{max} - \left[\frac{I \times DCR}{T_e} \right]$$

Janitza®

Janitza electronics GmbH
Vor dem Polstück 6 | 35633 Lahnau
Germany

Tel. +49 6441 9642-0
info@janitza.com | www.janitza.com

optec

Contact us

Optec AG | Guyer-Zeller-Strasse 14 | CH-8620 Wetzikon ZH

+41 44 933 07 70 info@optec.ch www.optec.ch

Doc. No. 2.204.048.1.c | 12/2023 | Subject to technical alterations.
The latest version of the document can be found in the download area at www.janitza.com.