Smart Energy & Power Quality Solutions



EXPERTS IN ENERGY MEASUREMENT TECHNOLOGY

Main catalog 2026

Janitza



COMPANY PROFILE

PRODUCTS

SERVICES

TECHNICAL APPENDIX

INFORMATION

COMPANY PROFILE

6 Janitza electronics GmbH – A future with tradition
10 Industry solutions

PRODUCTS

Overviews
14 Selection guide for UMGs
16 Overview of UMG measurement devices
20 Communication levels

Front panel meters
24 Energy analyzers
44 Network analyzers
88 Power quality analyzer
96 Power quality analyzer, Class A

DIN rail meters
106 Energy analyzers
120 Network analyzers
130 UMG 800 & UMG 801 modules
156 Power quality analyzers
174 MID energy meters

Current transformer
205 Operating current transformers
255 Residual current transformer
269 Accessories

Accessories
276 Janitza Universal Gateway JUG 25
278 EasyGateway V50
280 Gateway MBUS-GEM
281 PowerToStore
283 Switching power supplies
286 Mounting and installation aids

INDEX

Measurement data acquisition

294 ProData® – Data logger and Ethernet Modbus Gateway

Software

302 GridVis® – Power grid monitoring software
322 Multiprotocol server – OPC UA
326 Database server – Complete server with GridVis® and database
332 Device homepage – Energy management & PQ analysis online
334 Jasic® – Versatile programming options

SERVICES – JANITZA SERVICE

342 Training courses
356 Commissioning & calibration
360 Mobile measurement devices
362 Power Quality
366 Other services

TECHNICAL APPENDIX

370 Standards and directives
384 High availability through 3-in-1 monitoring
422 Continuous measurement
427 Formulary
434 Current transformer
445 Communication
456 Prerequisite and confirmation for commissioning (VBI)

INFORMATION

466 Logistics information
474 Terms and conditions



JANITZA ENERGY MEASUREMENT

A FUTURE WITH TRADITION

Our development and manufacturing operations have been located in Lahnau, Hesse, between Wetzlar and Gießen for more than 60 years. In 1986, Janitza electronics GmbH emerged from Eugen Janitza GmbH, founded in 1961. Today, Janitza is one of the leading suppliers of energy measurement technology and complete solutions in the fields of energy and load management, power quality, and residual current monitoring (RCM) in a wide range of industries worldwide.

Our strengths: We supply complete solutions – hardware, software, and services. Our measurement devices, monitoring platforms, and analysis services work seamlessly with each other, giving our customers an integrated system that makes electrical energy transparent, reduces risks, and unlocks efficiency potential.

Innovation has always been a part of our history. In 1988, we presented the world's first electronic power factor controller with harmonics threshold values and automatic stage disconnection. Today, we are still continuing to combine new technologies with proven applications to create intelligent, practical solutions.

The company is supported by a strong management team: Markus Janitza has been managing the company since it was founded. In 2024, Alexander Veidt joined the management board as CFO; in May 2025, Michael Kadziela joined as CSO to drive forward the company's international market development.

With more than 600 employees and project experience across six continents, we meet the global challenges of energy supply. Our goal: to ensure the safe, sustainable and efficient use of electrical energy – for our customers, partners, and in our own buildings.

600

CURRENT NUMBER OF EMPLOYEES

6

CONTINENTS

30 %

ENERGY EFFICIENCY SAVINGS



GLOBAL PROJECTS – LOCAL SUPPORT

Janitza carries out projects worldwide in the areas of energy management, power quality, residual current monitoring, and load management. We focus on proximity to our customers: with our own branches and sales offices in the USA, Mexico, Australia, Ireland, the UK, and India – and a strong international partner network.

Janitza customers benefit from our global presence and local service. In addition to efficient logistics, we offer comprehensive services: technical advice, customer-specific monitoring concepts, training, and support for measurement analysis. Digital services allow flexible, location-independent collaboration.

With project experience across all continents, Janitza covers central market segments – from industry and building services engineering to energy suppliers and data centers. Our mission: to develop innovative solutions that ensure energy quality, increase efficiency and guarantee operational safety.

80

COUNTRIES WE SUPPLY

8

COUNTRY REPRESENTATIVES

76

INTERNATIONAL PARTNERS

AT ALL LEVELS

Electrical energy is essential everywhere across the globe – in all industries, workplaces, and homes. But not all current is equal. Its quality depends on several parameters. Voltage, frequency, and network stability all play a part in the uninterruptible operation of systems and consumers.

At the same time, the source of the energy is playing an ever bigger role: Renewable energy is a key issue, both for society and for the economy. The nature of energy supply and distribution is also changing rapidly – from decentralized generation plants to new load profiles resulting from electromobility and digitalization.



From a company perspective, saving energy and reducing consumption go hand in hand. Reliable and efficient working requires in-depth knowledge and monitoring of the quality of the electrical energy.

Be it in data centers, industry, or in distribution substations: Janitza offers the right measurement device for every application. Our systems capture current, voltage and almost all relevant network parameters in realtime, allowing users to continuously monitor networks, identify discrepancies quickly, and control loads in a targeted manner. Energy efficiency increases, whilst costs and emissions decrease. Identifying disturbances early avoids outages and reduces fire risks.

With measurement solutions from Janitza, you can lay the groundwork for a consistently high supply quality and the efficient use of electrical energy.

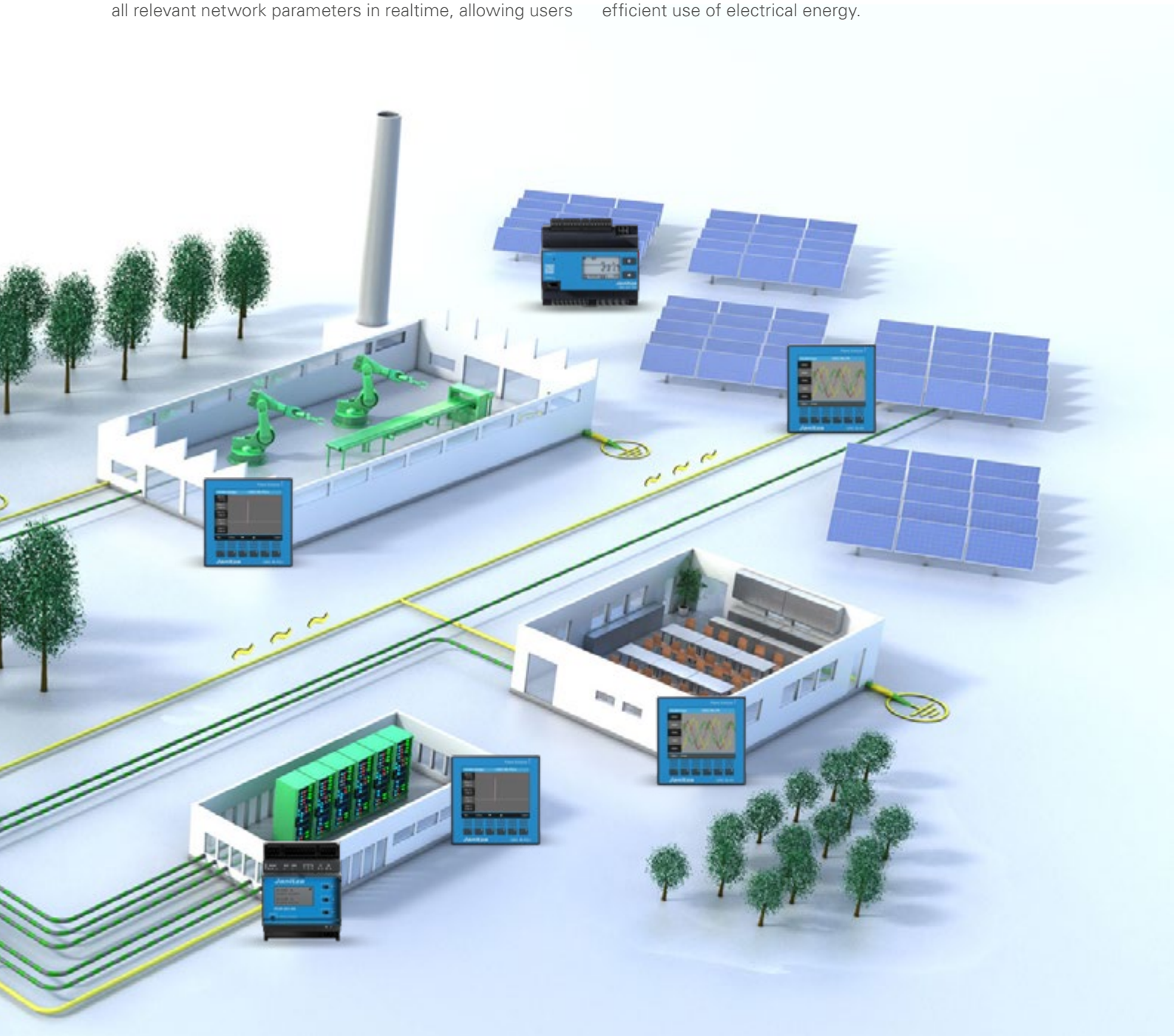

INDUSTRY SOLUTIONS

INDUSTRY

In many industrial areas, maximum energy availability is essential – and requirements are increasing worldwide. Janitza's energy measurement technology allows disturbances to be identified and remedied at an early stage. It helps customers to comply with legal requirements for energy efficiency and energy management, improves fire protection, and simplifies documentation – especially in combination with the GridVis® power grid monitoring software.

DATA CENTER

Data centers are under growing pressure due to advances in digitalization: Uptime and safety are the primary requirements – whilst the significance of energy efficiency continues to grow. Janitza solutions create transparency at all levels, reveal potential savings, and ensure uptime thanks to the early detection of disturbance variables in current and voltage.



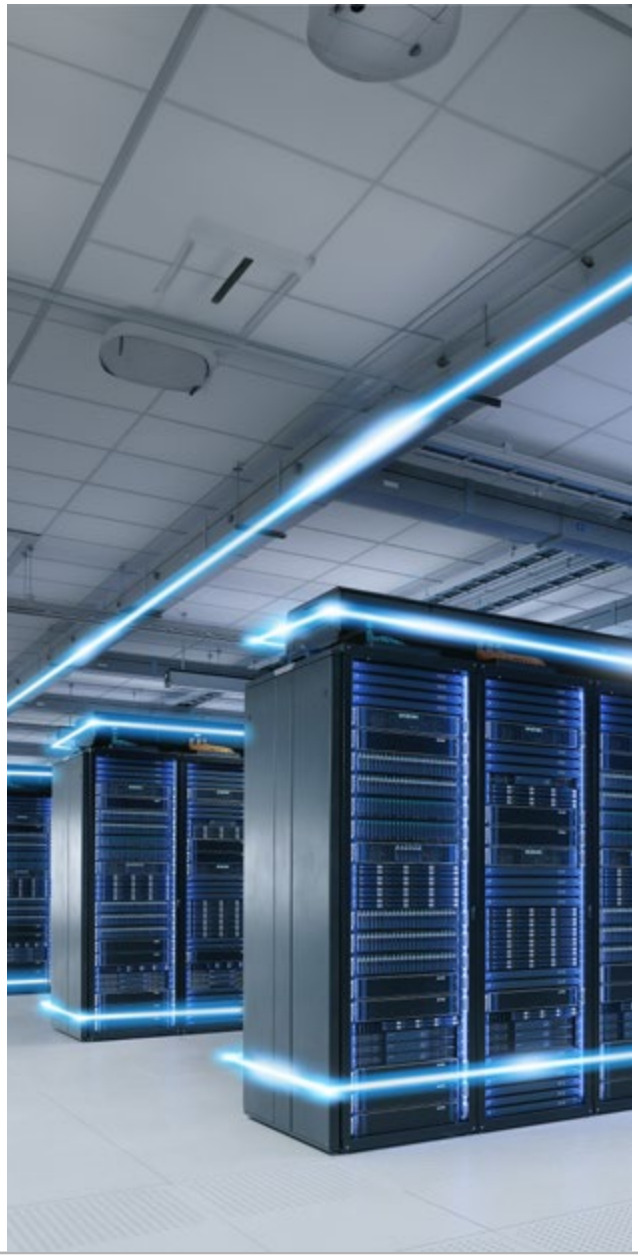

ENERGY SUPPLIER

Decentralized supply, modified load profiles, electromobility, and digitalization are posing new challenges for energy suppliers. By ensuring a comprehensive and complete measuring infrastructure in the low voltage area it is possible to precisely detect load flows, rate power quality, determine critical operating points, and plan grid expansions. Energy measurement technology from Janitza delivers the data customers need, creates transparency for current and voltage data, and can be flexibly integrated into existing systems.

BUILDINGS AND INFRASTRUCTURE

Modern building services engineering and increasing automation demand an accurate overview of the current status of buildings, consumption, and energy flows. Janitza's extensive range of products delivers energy monitoring in central ventilation systems and detailed consumption recording in offices and business premises. Multiple interfaces ensure seamless integration in existing systems and the building management system.







PRODUCTS

Overviews	**14**	Selection guide for UMGs
	16	Overview of UMG measurement devices
	20	Communication levels
Front panel installation measurement devices	**24**	Energy analyzers
	68	Power analyzers
	88	Power quality analyzers
	96	Power quality analyzer, Class A
DIN rail measurement devices		
	106	Energy analyzers
	120	Network analyzers
	130	UMG 800 & UMG 801 modules
	156	Power quality analyzers
	174	MID energy meters
Current transformer	**205**	Operating current transformers
	255	Residual current transformer
	269	Accessories
Accessories	**276**	Janitza Universal Gateway JUG 25
	278	EasyGateway V50
	280	Gateway MBUS-GEM
	281	PowerToStore
	282	Switching power supplies
	286	Mounting and installation aids

DIN RAIL MEASUREMENT DEVICES

Universal measurement devices

Energy analyzers



- 40th harmonic
- Communication settings directly on the device
- Compact – 4 HP
- Comparator
- Continuous measurement
- Modbus interface
- Class 0.5S

UMG 103-CBM



- 63rd harmonic
- Modular expandability
- Compact – 2 HP
- Comparator
- Events and transients
- Modbus interface

UMG 801

Network analyzers



- 127th harmonic
- Class S according to IEC 61000-4-30
- Modular expandability (92 channels)
- Multifunction channels: Residual current, temperature, operating current
- Events and transients
- High dielectric strength, 1000 V CAT III
- Class 0.2S
- Class S according to IEC 61000-4-30

UMG 801



- 40th harmonic
- Device homepage
- Events and transients
- Programming options (Jasic & Apps)
- Power quality analysis onboard
- 300 V CAT III
- Class 0.5S

UMG 604-PRO

Power quality analyzers



- 63rd harmonic
- Device homepage
- Flicker measurement
- Events and transients
- Programming options (Jasic & Apps)
- Power quality analysis onboard
- EN 50160/61000-2-4
- Class S according to IEC 61000-4-30

UMG 605-PRO

Residual current monitors



- Standards-compliant to DIN EN 62020
- Residual current analysis, type B
- Residual current detection, type B+
- Modbus interface
- LCD display

RCM 202-AB



- Measurement with Rogowski coil
- Modbus interface
- Various measuring ranges configurable

RCM 201-ROGO

FRONT PANEL INSTALLATION MEASUREMENT DEVICES



- 15th harmonic
- Cost effective
- 2-button operation
- Modbus interface
- Class 0.5S

UMG 96-S2



- 40th harmonic
- Cost effective
- 2-button operation
- Ethernet interface
- Class 0.5S

UMG 96-EL



- 40th harmonic
- Different interface variants
- 2-button operation
- Comparator
- Continuous measurement
- Modbus interface
- Class 0.5S

UMG 96RM series

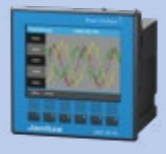

- 40th harmonic
- Modular expandability
- Residual current detection
- MID certification
- Meter reading cycle to PTB-A 50.7
- 600 V CAT III
- Ethernet interface
- Class 0.2S

UMG 96-PA series



- 40th harmonic
- Residual current detection
- Device homepage
- Events (200 ms)
- 300 V CAT III
- Ethernet interface
- Class 0.5S

UMG 96RM-E



- 65th harmonic
- Class S according to IEC 61000-4-30
- Modular expandability
- Residual current detection
- Color graphic display & 6-button operation
- 600 V CAT III
- Ethernet interface
- Events (20 ms)
- Class 0.2S

UMG 96-PQ-L series



- 63rd harmonic
- Residual current detection
- Events and transients
- Programming options (Jasic & Apps)
- Power quality analysis onboard

UMG 509-PRO

Power quality analyzer, Class A



- 63rd harmonic
- Class A according to IEC 61000-4-30
- Residual current detection
- Flicker measurement
- Events and transients
- Programming options (Jasic & Apps)
- Power quality analysis onboard
- EN 50160 / 61000-2-4

UMG 512-PRO

FRONT PANEL INSTALLATION MEASUREMENT DEVICES






Type	UMG 96-S2	UMG 96-EL (UL certified)	UMG 96RM (UL certified)					UMG 96-PA (UL certified)	
			P	M	E	PN		96-PA	96-PA-MID+
Item no.	5234002	5235001	5222061	5222064	5222069	5222062	5222090	5232001*1	5232004
Use in three-phase 4-conductor systems with grounded neutral conductor up to max.	230 / 400 V AC	277 / 480 V AC	277 / 480 V AC					347 / 600 V AC (UL)*11 417 / 720 V AC (IEC)*11	
Use in three-phase 3-conductor systems ungrounded up to max.	–	480 V AC	480 V AC					–	
Supply voltage	90 – 265 V AC; 90 – 250 V DC	90 – 277 V AC; 90 – 250 V DC*1	90 – 277 V AC; 90 – 250 V DC*1					90 – 277 V AC; 90 – 250 V DC*1	
Three conductor / four conductor (L-N, L-L)	– / •	• / •	• / •					• / •	
Quadrants	4	4	4					4	
Sampling frequency 50/60 Hz	8 kHz	21.33 / 25.6 kHz	21.33 / 25.6 kHz					8.13 kHz	
Meter reading cycle as per PTB-A 50.7	–	–	–					–	•
Effective value from periods (50/60 Hz)	16 / 16	10 / 12	10 / 12					10 / 12	
Residual current inputs	–	–	–	–	–	2	2	–	
Current measuring channels	3	3	3	4	3	4	4	3*7	
Thermistor input	–	–	–	–	–	2*4	2*4	•*17	
Harmonics current V / A	1. – 15.	1. – 40.	1. – 40.					1. – 40.	
Distortion factor THD-U/THD-I in %	•	•	•					•	
Unbalance	–	–	–					–	
Momentary / long-term flicker	–	–	–					–	
Transients	–	–	–					–	
Short-term interruptions	–	–	–	–	–	•	–	–	
Accuracy V / A	0.2 % / 0.2 %	0.2 % / 0.2 %	0.2 % / 0.2 %					0.2 % / 0.2 %	
IEC 61000-4-30	–	–	–					–	
Active energy class	0.5S (.../5 A)	0.5S (.../5 A)	0.5S (.../5 A)					0.2S (.../5 A)	
Digital inputs	–	–	–	4	–	(3)*3	(3)*3	3	
Digital / pulse output	1	–	2	6	2	(5)*3	(5)*3 *5	3	
Analog output	–	–	–	–	–	–	–	1	
Memory for min. / max. values	•	•	•					•	
Memory size / recording duration (according to factory setting)	–	–	–	256 MB*13	–	256 MB*12	–	8 MB / approx. 3 months (MID+ meter reading cycle: approx. 24 months)	
Clock	–	–	–	•	–	•	–	•	
Integrated logic	–	Comparator	Comparator					Comparator	
Web server / Email	– / –	– / –	– / –	– / –	– / –	• / •	• / –	•*17 / –	
APPs: Measured value monitor, EN 50160 & IEC 61000-2-4 Watchdog	–	–	–					–	
Fault recorder function	–	–	–					–	
Peak load optimization	–	–	–					–	
Software for energy management and network analysis	GridVis®-Essential	GridVis®-Essential	GridVis®-Essential					GridVis®-Essential	
GridVis® Items	1	1	1					1	
Interfaces									
RS-232	–	–	–					–	
RS485	•	–	•	•	–	•	•	•	
USB	–	–	–	•	–	–	–	–	
D-SUB 9 plug (Profibus)	–	–	–	•	–	–	–	–	
M-Bus	–	–	–	–	•	–	–	–	
Ethernet	–	•	–	–	–	•	2	•*17	
Protocols									
Modbus RTU	•	–	•	•	–	•	•	•	
Modbus gateway	–	–	–	–	–	•	–	–	
Profibus DP V0	–	–	–	•	–	–	–	–	
Modbus TCP/IP, Modbus RTU over Ethernet	–	•	–	–	–	•	•	•*17	
SNMP	–	–	–	–	–	•	–*6	–	
OPC UA	–	–	–	–	–	–	–	–	
BACnet IP	–	–	–	–	–	•*2	–	–	
Profinet	–	–	–	–	–	–	•	–	
MQTT	•*18	•	•*18	•*18	–	•*18	•*18	•*18	

MODULE FOR THE UMG 96-PA & UMG 96-PQ-L



UMG 96-PQ-L
(UL certified)

&



Module 96-RCM-E
(UL certified)



UMG 509-PRO
(UL certified)



UMG 512-PRO
(UL certified)

PQ-L		PQ-L-LP		PQ-L-IT				
5236001[*1]	5236021[*1]	5236006[*1]	5236026[*1]	5236005	5236025	5232010	5226001	5217011
347 / 600 V AC (UL) 417 / 720 V AC (IEC)						–	347 / 600 V AC (UL) 417 / 720 V AC (IEC)	347 / 600 V AC (UL) 417 / 720 V AC (IEC)
–				600 V AC		–	600 V AC	600 V AC
90 – 277 V AC; 90 – 250 V DC[*1]						–	95 – 240 V AC; 80 – 300 V DC[*1]	95 – 240 V AC; 80 – 300 V DC[*1]
• / •						–	• / •	• / •
4						–	4	4
13.67 kHz				13.97 kHz		–	20 kHz	25.6 kHz
–						–	–	–
10 / 12						–	10 / 12	10 / 12
–						2	2	2
3[*7]	3[*7]	4	4	3[*7]	3[*7]	1	4	4
•[*17]						1	1	1
1. – 65.						–	1. – 63.	1. – 63.
•						–	•	•
–						–	•	•
•[*2]						–	–	•
–						–	> 50 µs	> 39 µs
•						–	•	•
0.2 % / 0.2 %						–	0.1 % / 0.2 %	0.1 % / 0.1 %
Class S[*2]						–	–	Class A
0.2S[*14]						–	0.2S (.../5 A)	0.2S (.../5 A)
3						–	2	2
3						–	2	2
1						–	–	–
•						–	•	•
64 MB / Partition A: approx. 45 months, Partition B: approx. 20 months						–	256 MB / approx. 96 months	256 MB / approx. 3 months
•						–	•	•
Comparator						–	Jasic® (7 prg.)	Jasic® (7 prg.)
•[*17] / –						• / –	• / •[*15]	• / •[*15]
–						–	•	•
–						–	•	•
–						–	–	–
GridVis®-Essential						GridVis®-Essential	GridVis®-Essential	GridVis®-Essential
1						0	1	1
–						–	–	–
•						–	•	•
–						–	–	–
–						–	•	•
–						–	–	–
•[*17]						•	•	•
•						–	•	•
–						•	•	•
–						–	•	•
•[*17]						•	•	•
–						–	•	•
–						–	–	–
–						–	•[*2]	•[*2]
–						–	–	–
•[*18]						–	•[*18]	•[*18]

- • : Included
- – : Not included

*1 Other voltages are also available optionally

*2 Option

*3 Possible combinations of inputs and outputs:
a) 5 digital outputs
b) 2 digital outputs and 3 digital inputs

*4 Combined function: optional analog / temperature / residual current input

*5 2 pulse outputs

*6 SNMP for internal Profinet communication only

*7 With module + 1 current measuring channel

*8 On the basic device

*9 Additional query of Modbus RS485 measurement points (server)

*10 These are 4...20 mA signal inputs

*11 289 / 500 V AC for MID+ models

*12 Partition A: approx. 106 months, partition B: approx. 26 months

*13 approx. 2 months

*14 For item numbers 5236006 and 5236026: Class 0.5S (... A/333 mV) and 0.5S for the Rogowski coils (... mV/kA)

*15 Without SSL

*16 Health check with a non-contact voltage measurement

*17 On the 96-RCM-E module

*18 With Gateway JUG 25 via Modbus RTU/TCP (available from January 2026)

Comment: Detailed, technical For information, please refer to the respective operating manual and the Modbus address lists.

DIN RAIL MEASUREMENT DEVICES

Type	 UMG 103-CBM (UL certified)	 UMG 604-PRO (UL certified)	 UMG 605-PRO (UL certified)	 UMG 800 (UL certified)	 UMG 801 (UL certified)
Item no.	5228001	5216202	5216227	5238001	5231003
Use in three-phase 4-conductor systems with grounded neutral conductor up to max.	277 V / 480 V AC	277 / 480 V AC	277 / 480 V AC	277 / 480 V AC	347 / 600 V AC (UL) 480 / 830 V AC (IEC)
Use in three-phase 3-conductor systems ungrounded up to max.	–	480 V AC	480 V AC	480 V AC	690 V AC
Supply voltage	–	95 – 240 V AC; 135 – 340 V DC*1	95 – 240 V AC; 135 – 340 V DC*1	24 V DC, PELV	24 V DC, PELV
Three conductor / four conductor (L-N, L-L)	– / •	• / •	• / •	• / •	• / •
Quadrants	4	4	4	4	4
Sampling frequency 50/60 Hz	5.4 kHz	20 kHz	20 kHz	51.2 kHz	51.2 kHz (V) / 25.6 kHz (A)
Meter reading cycle as per PTB-A 50.7	–	–	–	–	–
Effective value from periods (50/60 Hz)	10 / 12	10 / 12	10 / 12	10 / 12	10 / 12
Residual current inputs	–	–	–	–	4*4
Current measuring channels	3	4	4	96 (only via modules)	8 (plus 96 via modules)
Thermistor input	–	1	1	–	4*4
Harmonics current V / A	1. – 40.	1. – 40.	1. – 63.	1. – 63. / –	1. – 127. / 1. – 63.
Distortion factor THD-U/THD-I in %	•	•	•	only THD-U	•
Unbalance	–	•	•	•	•
Momentary / long-term flicker	–	–	•	•	•
Transients	–	> 50 µs	> 50 µs	18 µs (V)	18 µs
Short-term interruptions	–	•	•	•	•
Accuracy V / A	0.2 % / 0.5 %	0.2 % / 0.25 %	0.2 % / 0.25 %	0.2 % / –	0.2 % / 0.2 %
IEC 61000-4-30	–	–	Class S	–	Class S
Active energy class	0.5S (.../5 A)	0.5S (.../5 A)	0.5S (.../5 A)	–	0.2S (.../5 A)
Digital inputs	–	2	2	–	4
Digital / pulse output	–	2	2	–	4
Analog output	–	–	–	–	1
Memory for min. / max. values	•	•	•	•	•
Memory size / recording duration (according to factory setting)	4 MB / approx. 3 months	128 MB / approx. 48 months	128 MB / approx. 2.5 months	4 GB / approx. 96 months	4 GB / approx. 96 months
Clock	•	•	•	•	•
Integrated logic	Comparator	Jasic® (7 prg.)	Jasic® (7 prg.)	Comparator	Comparator
Web server / Email	– / –	• / •*15	• / •*15	• / –	• / –
APPs: Measured value monitor, EN 50160 & IEC 61000-2-4 Watchdog	–	•	•	–	–
Fault recorder function	–	•	•	•	•
Peak load optimization	–	•*2	•*2	–	–
Software for energy management and network analysis	GridVis®-Essential	GridVis®-Essential	GridVis®-Essential	GridVis®-Essential	GridVis®-Essential
GridVis® Items	1	1	1	0	1
Interfaces					
RS-232	–	•	•	–	–
RS485	•	•	•	•	•
USB	–	–	–	•	•
D-SUB 9 plug (Profibus)	–	–	•	–	–
M-Bus	–	–	–	–	–
Ethernet	–	•	•	2	2
Protocols					
Modbus RTU	•	•	•	•	•
Modbus gateway	–	•	•	•*9	•*9
Profibus DP V0	–	–	•	–	–
Modbus TCP/IP, Modbus RTU over Ethernet	–	•	•	Modbus TCP/IP	Modbus TCP/IP
SNMP	–	•	•	–	–
OPC UA	–	–	–	•	•
BACnet IP	–	•*2	•*2	–	–
Profinet	–	–	–	–	–
MQTT	•*18	•*18	•*18	•*18	•*18

MODULES FOR THE UMG 800 & UMG 801



Module 800-DI14 (UL certified)	Module 800-CT8-LP (UL certified)	Module 800-CT8-A (UL certified)	Module 800-CT12-SVD-US (UL certified)	Module 800-CT24 (UL certified)
5231214	5231234	5231230	5231301	5231247
only digital inputs	current measurement only	current measurement only	current measurement only	current measurement only
–	–	–	–	–
via basic device	via basic device	via basic device	via basic device	via basic device
–	–	–	–	–
–	4	4	4	4
–	8.33 kHz	8.33 kHz	6.8 kHz	8.33 kHz
–	–	–	–	–
–	10 / 12	10 / 12	10 / 12	10 / 12
–	–	–	–	–
–	8	8	12	24
–	–	–	–	–
–	1., 3., 5. ... 25.	1., 3., 5. ... 25.	1., 3., 5. ... 15.	1., 3., 5. ... 15.
–	THD-I only	THD-I only	THD-I only	THD-I only
–	–	–	–	–
–	–	–	–	–
–	•*8	•*8	•*8	•*8
–	•*8	•*8	•*8	•*8
–	– / 0.2 %	– / 0.5 %	•*16 / 0.2 %	– / 0.2 %
–	–	–	–	–
–	0.5S (.../333 mV)	0.5S (.../5 A)	0.5S	0.5S (.../333 mV)
14	–	–	–	–
–	–	–	–	–
–	–	–	–	–
•*8	•*8	•*8	•*8	•*8
–	–	-	–	–
•*8	•*8	•*8	•*8	•*8
•*8	•*8	•*8	•*8	•*8
•*8 / –	•*8 / –	•*8 / –	•*8 / –	•*8 / –
–	–	–	–	–
•*8	•*8	•*8	•*8	•*8
–	–	–	–	–
GridVis®-Essential	GridVis®-Essential	GridVis®-Essential	GridVis®-Essential	GridVis®-Essential
1	1	1	1.5	3
–	–	–	–	–
•*8	•*8	•*8	•*8	•*8
•*8	•*8	•*8	•*8	•*8
–	–	–	–	–
–	–	–	–	–
•*8	•*8	•*8	•*8	•*8
•*8	•*8	•*8	•*8	•*8
–	–	–	–	–
–	–	–	–	–
•*8	•*8	•*8	•*8	•*8
–	–	–	–	–
•*8	•*8	•*8	•*8	•*8
–	–	–	–	–
–	–	–	–	–
–	–	–	–	–

- • : Included
- – : Not included

*1 Other voltages are also available optionally

*2 Option

*3 Possible combinations of inputs and outputs:
a) 5 digital outputs
b) 2 digital outputs and 3 digital inputs

*4 Combined function: Optional analog / temperature / residual current input

*5 2 pulse outputs

*6 SNMP for internal Profinet communication only

*7 With module + 1 current measuring channel

*8 On the basic device

*9 Additional query of Modbus RS485 measurement points (server)

*10 These are 4...20 mA signal inputs

*11 289 / 500 V AC for MID+ models

*12 Partition A: approx. 106 months, partition B: approx. 26 months

*13 approx. 2 months

*14 For item numbers 5236006 and 5236026: Class 0.5S (... A/333 mV) and 0.5S for the Rogowski coils (... mV/kA)

*15 Without SSL

*16 Health check with a non-contact voltage measurement

*17 On the 96-RCM-E module

*18 With Gateway JUG 25 via Modbus RTU/TCP

Comment: Detailed, technical For information, please refer to the respective operating manual and the Modbus address lists.

SYSTEM INTEGRATION

COMMUNICATION LEVELS

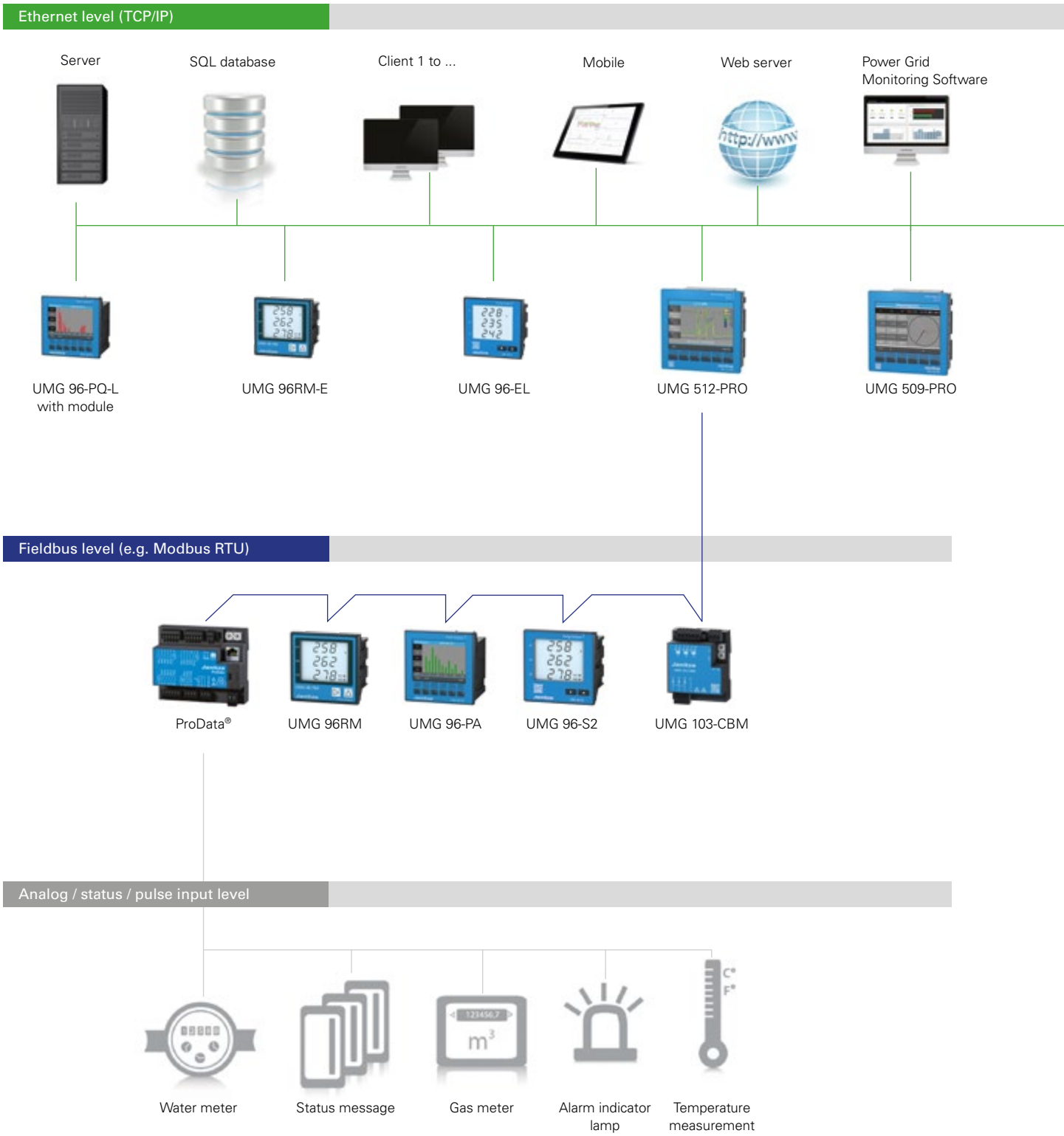

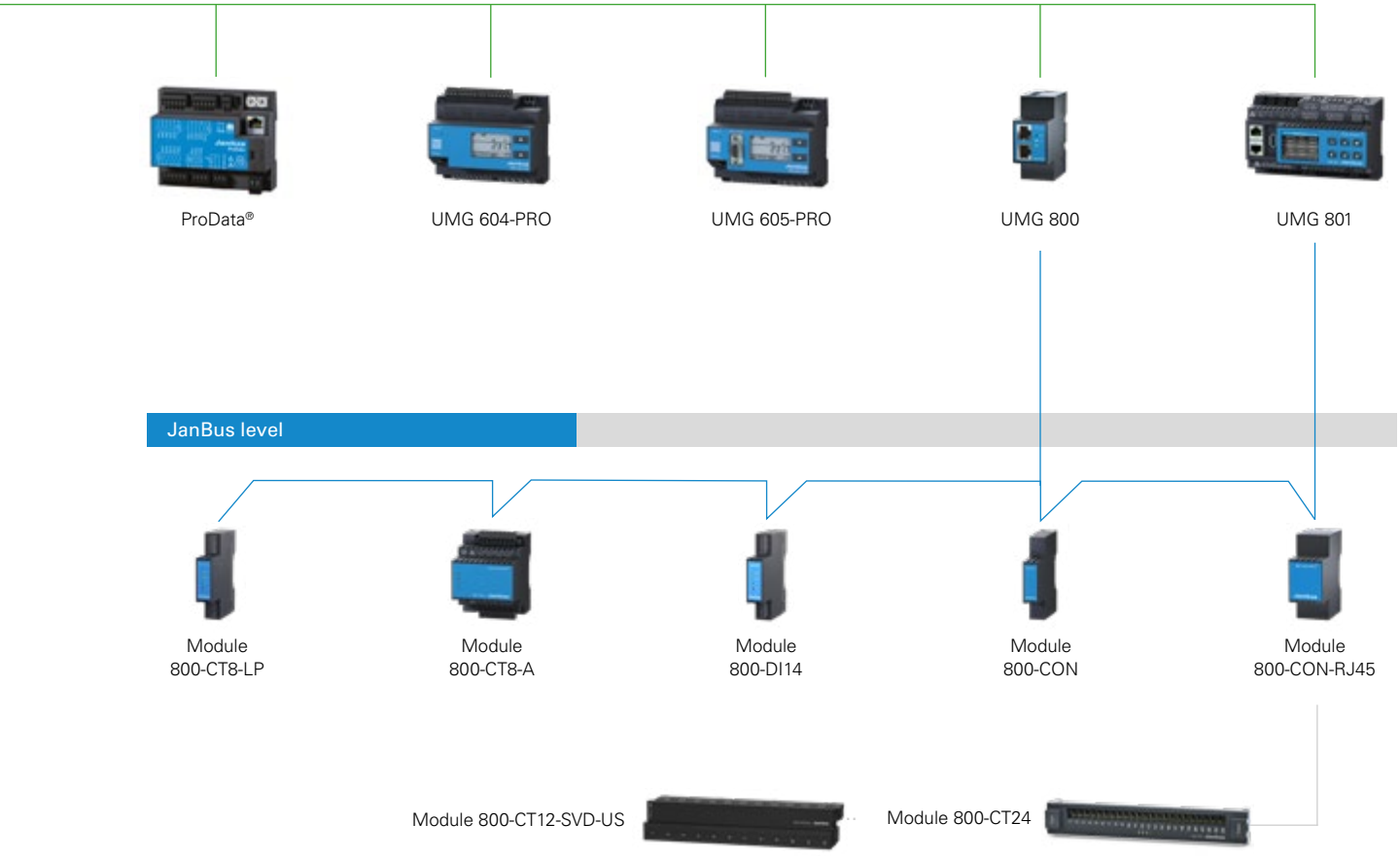
ProData®
UMG 604-PRO
UMG 605-PRO
UMG 800
UMG 801
JanBus level
Module 800-CT8-LP
Module 800-CT8-A
Module 800-DI14
Module 800-CON
Module 800-CON-RJ45
Module 800-CT12-SVD-US
Module 800-CT24

FRONT PANEL INSTALLATION MEASUREMENT DEVICES



UMG 96-S2
Cost effective entry-level universal measurement device



UMG 96-EL
Energy analyzer with Ethernet



UMG 96RM series
Multifunctional energy analyzer



UMG 96-PA series
Modularly expandable network analyzer (MID, meter reading cycle)



UMG 96RM-E
Multifunctional network analyzer with Ethernet and RCM

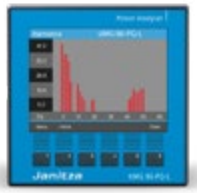

UMG 96-PQ-L series
Modularly expandable network analyzer



UMG 509-PRO
Multifunctional power quality analyzer



UMG 512-PRO
Certified power quality analyzer (Class A/IEC 61000-4-30)

FRONT PANEL INSTALLATION MEASUREMENT DEVICES

Overviews

24	UMG 96-S2	Energy analyzer with Modbus
30	UMG 96-EL	Energy analyzer with Ethernet
36	UMG 96RM series	Multifunctional energy analyzer
44	UMG 96-PA series	Modularly expandable network analyzer (MID, meter reading cycle)
68	UMG 96RM-E	Multifunctional power analyzer with Ethernet & RCM
76	UMG 96-PQ-L series	Modularly expandable network analyzer
88	UMG 509-PRO	Multifunctional power quality analyzer
96	UMG 512-PRO	Certified power quality analyzer (Class A according to IEC 61000-4-30)

UMG 96-S2

ENERGY ANALYZER WITH MODBUS

INTERFACES
- RS-485

COMMUNICATION
- Modbus RTU

POWER QUALITY
- Harmonics current up to the 15th harmonic

PERIPHERY
- Digital output (S0 interface)
- 4 voltage measurement inputs
- 3 current measurement inputs

MEASURING ACCURACY
- Class 0.5S
- Current: 0.2 %
- Voltage: 0.2 %
- Sampling frequency: 8 kHz

UMG 96-S2

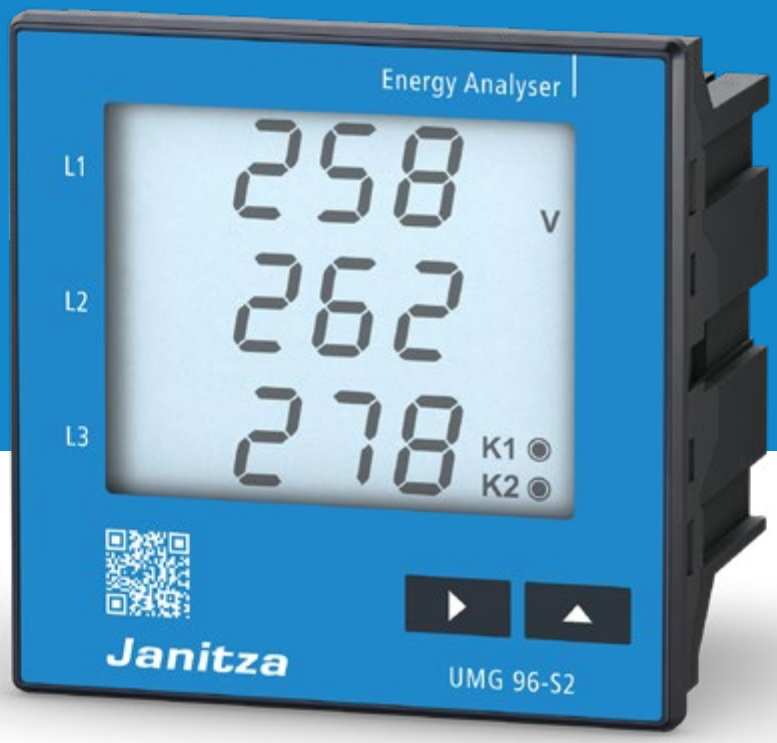

DISPLAY

Operation and configuration without opening the switchboard cabinet

ENERGY MANAGEMENT

Very accurate measurement, high sampling frequency

COMPACT

Reduced space requirement in the switchboard cabinet

DIMENSIONED DRAWING

All dimensions in mm

Bottom view

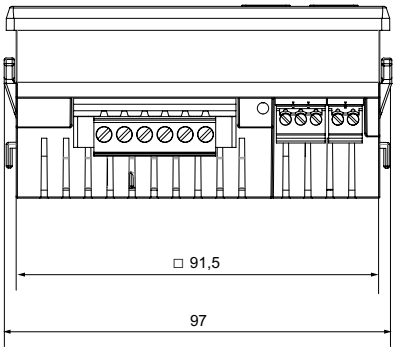

Side view

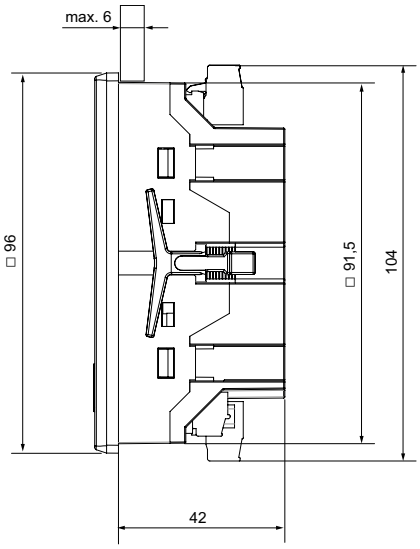

Cutout dimensions: $92^{+0.8}$ x $92^{+0.8}$ mm

CONNECTION EXAMPLE

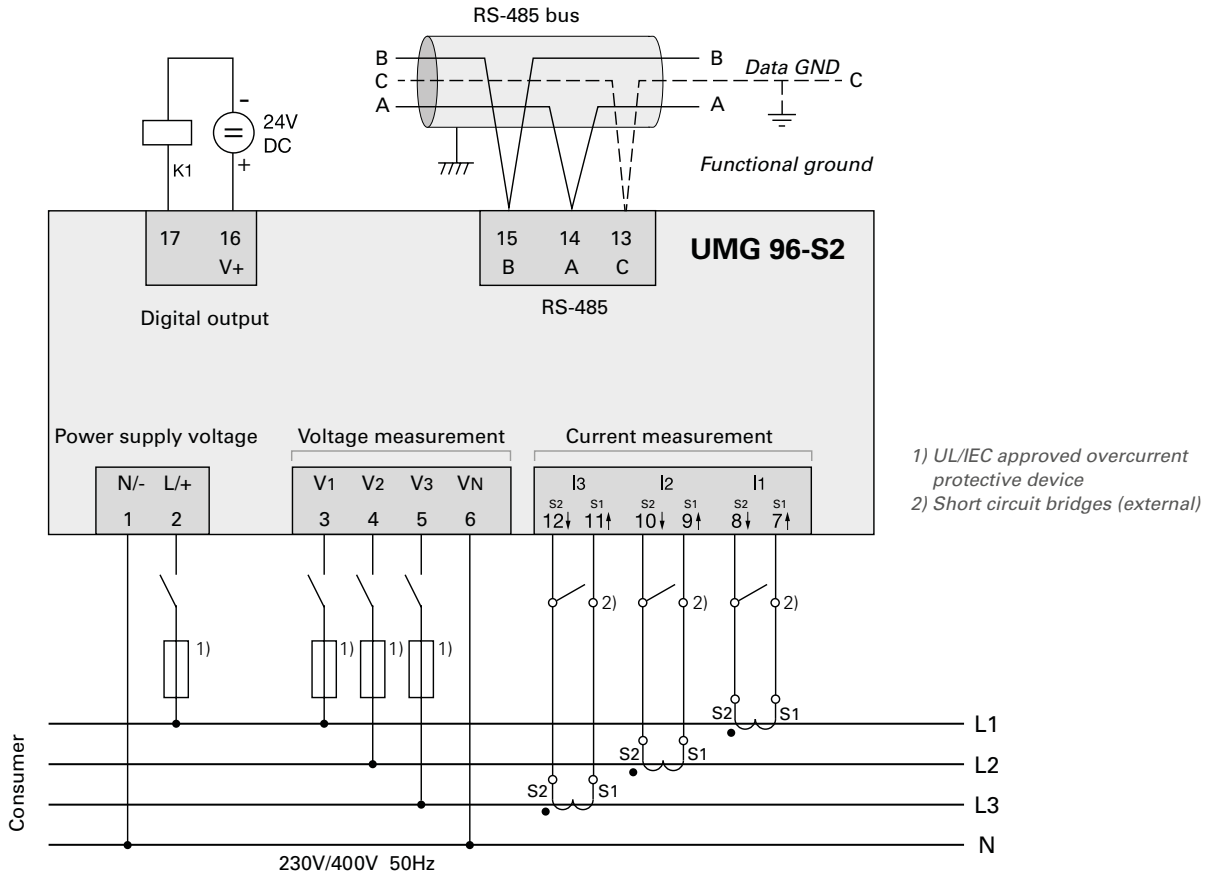

1) UL/IEC approved overcurrent protective device
2) Short circuit bridges (external)

TECHNICAL DATA

UMG 96-S2	
ITEM NO.	**5234002**
GENERAL	
Net weight (with attached connectors)	approx. 250 g (0.55 lb)
Package weight (including accessories)	approx. 500 g (1.10 lb)
Impact resistance	IK07 according to IEC 62262
TRANSPORT AND STORAGE The following information applies to devices which are transported and stored in the original packaging.	
Free fall	1 m (39.37 in)
Temperature	K55, –25 °C to +70 °C (–13 °F to 158 °F)
Relative humidity	0 to 90 % RH
AMBIENT CONDITIONS DURING OPERATION	
Use the UMG 96-S2 in a weather-protected, stationary application. Protection class II in accordance with IEC 60536 (VDE 0106, Part 1).	
Operating temperature range	K55, –10° C to +55° C (14 °F to 131 °F)
Relative humidity	0 to 75 % RH
Operating altitude	0 to 2000 m (1.24 mi) above sea level
Degree of pollution	2
Installation position	discretionary
Ventilation	no external ventilation required
Protection against foreign bodies and water – Front – Rear – Front side with sealing	 IP40 i.a.w. EN60529 IP20 i.a.w. EN60529 IP54 i.a.w. EN60529
SUPPLY VOLTAGE	
Nominal range	AC 90 V–265 V (50/60 Hz) or DC 90 V–250 V, 300 V CAT III
Operating range	±10 % of nominal range
Power consumption	max. 1.5 VA / 0.5 W
Internal fuse, not replaceable	Type T1A / 250 VDC / 277 VAC according to IEC 60127
Recommended overcurrent protective device for line protection	6–16 A, (Char. B, IEC-/UL approval)
VOLTAGE MEASUREMENT	
Three-phase 4-conductor systems with rated voltages up to	230 V/400 V (±10 %) according to IEC
Overvoltage category	300 V CAT III
Rated surge voltage	4 kV
Protection of the voltage measurement	1–10 A (with IEC/UL approval)
Measuring range L-N	0[1] to 300 V_{rms} (max. overvoltage 400 V_{rms})
Measuring range L-L	0[1] to 425 V_{rms} (max. overvoltage 620 V_{rms})
Overrange L-N	U_{L-N} > 300 V_{rms}
Resolution	0.01 V
Crest factor	1.9 (related to the measurement range)
Impedance	3 MΩ/phase
Power consumption	approx. 0.1 VA
Sampling frequency	8 kHz
Frequency of fundamental oscillation – resolution	45 Hz to 65 Hz – 0.01 Hz

CURRENT MEASUREMENT	
Rated current	x/1 and x/5 A
Measuring range	0.005 to 6 Arms
Measurement range exceedanc	I > 7 Arms
Crest factor (relative to the nominal current)	2
Resolution	1 mA (display 0.01 A) at …./5 A 1/4 mA at …./1 A
Overvoltage category	300 V CAT II
Measurement voltage surge	2 kV
Power consumption	approx. 0.2 VA (Ri = 5 mΩ)
Overload for 1 s	60 A (sinusoidal)
Sampling frequency	8 kHz

SERIAL INTERFACE	
RS-485 - Modbus RTU/Slave	9.6 kbps, 19.2 kbps, 38.4 kbps

DIGITAL OUTPUT (1 digital output, semiconductor relays, not short-circuit proof)	
Switching voltage	max. 60 V DC
Switching current	max. 50 mA_{eff} DC
Digital output (energy pulse)	max. 12.5 Hz

TERMINAL CONNECTION CAPACITY (SUPPLY VOLTAGE) Connectable conductor (connect only one conductor per terminal!)	
Single core, multi-core, fine-stranded	0.2–4 mm², AWG 28-12
Wire ferrules (non-insulated)	0.2–4 mm², AWG 26-12
Wire ferrules (insulated)	0.2–2.5 mm², AWG 26-14
Tightening torque	0.4–0.5 Nm (3.54-4.43 lbf in)
Stripping length	7 mm (0.2756 in)

TERMINAL CONNECTION CAPACITY (VOLTAGE MEASUREMENT) Connectable conductor (connect only one conductor per terminal!)	
Single core, multi-core, fine-stranded	0.2–4 mm², AWG 28-12
Wire ferrules (non-insulated)	0.2–2.5 mm², AWG 26-14
Wire ferrules (insulated)	0.2–2.5 mm², AWG 26-14
Tightening torque	0.4–0.5 Nm (3.54–4.43 lbf in)
Stripping length	7 mm (0.2756 in)

TERMINAL CONNECTION CAPACITY (CURRENT MEASUREMENT) Connectable conductor (connect only one conductor per terminal!)	
Single core, multi-core, fine-stranded	0.2–4 mm², AWG 28-12
Wire ferrules (non-insulated)	0.2–2.5 mm², AWG 26-12
Wire ferrules (insulated)	0.2–2.5 mm², AWG 26-14
Tightening torque	0.4–0.5 Nm (3.54–4.43 lbf in)
Stripping length	7 mm (0.2756 in)

TERMINAL CONNECTION CAPACITY (DIGITAL INTERFACE)	
Single core, multi-core, fine-stranded	0.2–1.5 mm², AWG 28-16
Wire ferrules (non-insulated)	0.2–1.5 mm², AWG 26-12
Wire ferrules (insulated)	0.2–1.5 mm², AWG 26-16
Tightening torque	0.2–0.25 Nm (1.77–2.21 lbf in)
Strip length	7 mm (0.2756 in)

TERMINAL CONNECTION CAPACITY (SERIAL INTERFACE)	
Single core, multi-core, fine-stranded	0.2–1.5 mm², AWG 28-16
Wire ferrules (non-insulated)	0.2–1.5 mm², AWG 26-16
Wire ferrules (insulated)	0.2–1.5 mm², AWG 26-16
Tightening torque	0.2–0.25 Nm (1.77–2.21 lbf in)
Strip length	7 mm (0.2756 in)

1) The device only determines measured values if voltage L1-N is greater than 20 V_{eff} (4-conductor measurement) or voltage L1-L2 is greater than 34 V_{eff} (3-conductor measurement) on voltage measurement input V1.

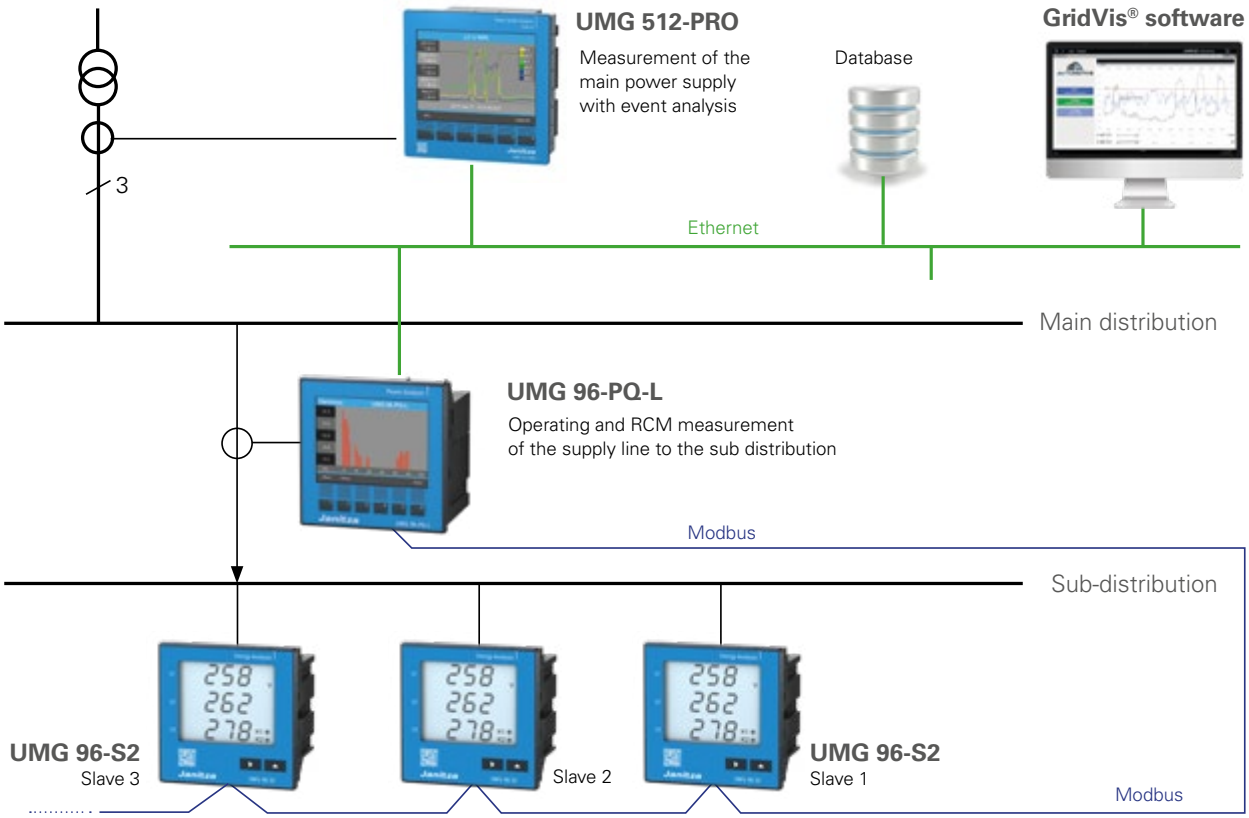

Fig.: Master slave principle

UMG 96-EL

ENERGY ANALYZER WITH ETHERNET

ALARM MANAGEMENT
- Integrated comparators

COMMUNICATION
- Ethernet via Modbus TCP/IP
- No gateway necessary

POWER QUALITY
- Harmonics up to the 40th harmonic
- Distortion factor THD-I / THD-U
- Rotary field components

PERIPHERY
- 3 current measurement channels

MEASURING ACCURACY
- Class 0.5 S
- Current 0.2 %
- Voltage 0.2 %

UMG 96-EL



COMMUNICATION

Direct Ethernet connection with Modbus TCP/IP

ENERGY MANAGEMENT

Extensive energy measurement data, high accuracy: 0.5S active energy

PRICE

Affordable energy analyser for the entry level

DIMENSIONED DRAWING

All dimensions in mm

Bottom view

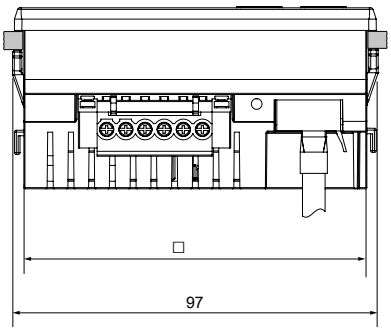

Side view

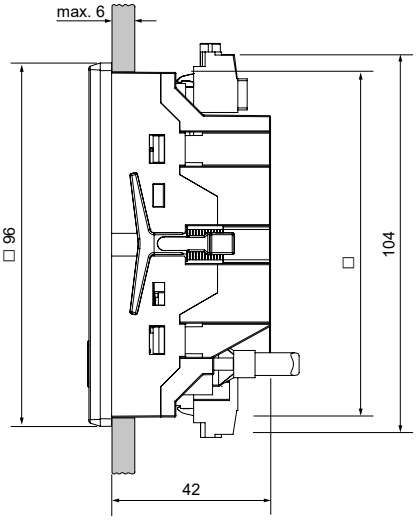

Cut-out size:: $92^{+0,8}$ x $92^{+0,8}$ mm

CONNECTION EXAMPLE

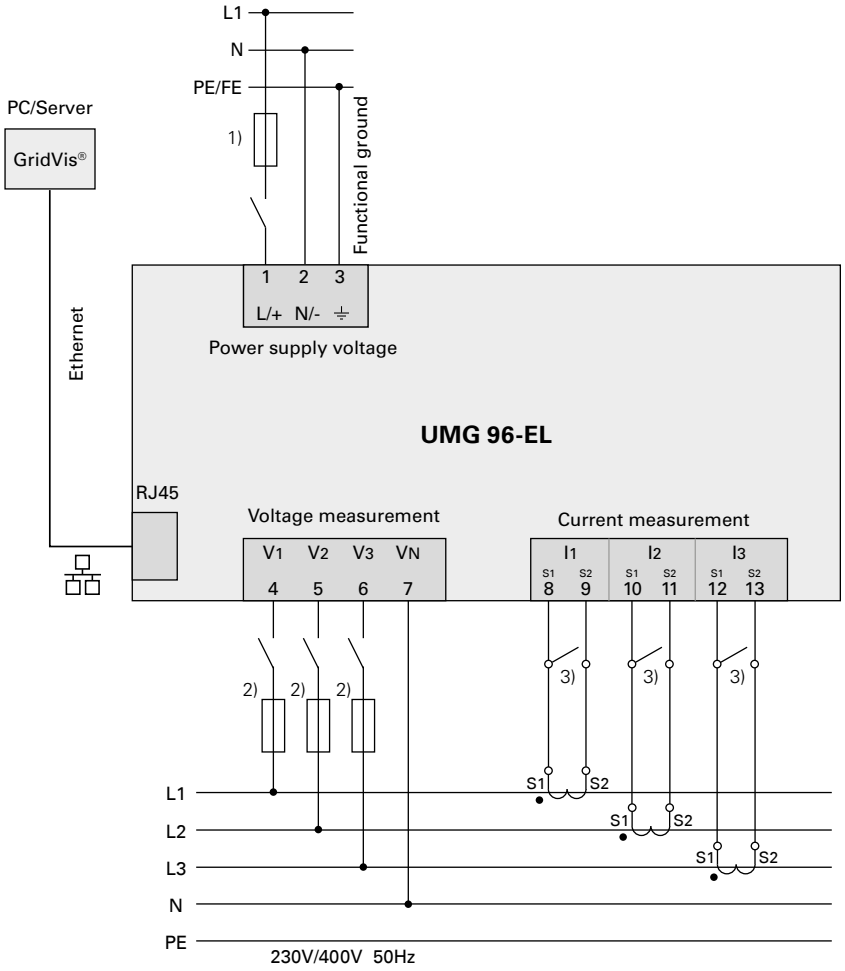

1) UL/IEC approved overcurrent protective device

2) UL/IEC approved overcurrent protective device

3) Short-circuit bridges (external)

TECHNICAL DATA

UMG 96-EL		
ITEM NO. (90–277 VAC/90–250 VDC)		**5235001**
ITEM NO. (24–90 VAC/24–90 VDC)		**5235002**
GENERAL		
Net weight (with attached plug-in connectors)		approx. 300 g (0.66 lbs)
Package weight (incl. accessories)		approx. 600 g (1.32 lbs)
Data memory		8 MB
Backlight service life		40,000 h (backlighting reduces to approx. 50 % over this period)
Battery		None
Impact resistance		6.8 joules according to UL 61010-1
Cleaning the front panel		Wipe with a dry cloth, if necessary moistened with LCD cleaner, no other solvents
TRANSPORT AND STORAGE The following information applies to devices that are transported or stored in their original packaging.		
Free fall		1 m (39.37 in)
Temperature		–25 to +70° C (–13 to +158 °F)
Relative humidity		0 to 90 % non-condensing
ENVIRONMENTAL CONDITIONS DURING OPERATION		
The UMG 96-EL – is intended for use in weather-protected, stationary use. – Protection class II according to IEC 60563 (VDE 0106, Part 1).		
Rated temperature range		–10 to +55° C (+14 to 131° F)
Relative air humidity as a function of the ambient temperature		Descending linearity: at 31° C (88° F) max. 80 % at 40° C (104 °F) max. 50 % (no condensation)
Operating elevation		0 to 2000 m (6562 ft) above sea level
Pollution degree		2
Mounting orientation		As desired
Ventilation		No forced ventilation required
Foreign body and water protection – Front – Back – Front with seal		 IP40 according to EN60529 IP20 according to EN60529 IP54 according to EN60529
SUPPLY VOLTAGE		
Option 230 V	Nominal range	AC 90 V–277 V (50/60 Hz) or DC 90 V–250 V, 300 V Overvoltage category III
	Power consumption	max. 4.0 VA / 1.5 W
Option 24 V	Nominal range	AC 24 V–90 V (50/60 Hz) or DC 24 V–90 V, 150 V Overvoltage category III
	Power consumption	max. 2.5 VA / 1.5 W
Operating range		±10 % of nominal range
Internal fuse, not replaceable		Typ T1A / 250 VDC / 277 VAC in accordance with IEC 60127
Recommended overcurrent protection device for line protection (IEC/UL approval)		6–16 A, characteristic B

Recommendation for the maximum number of devices on a line circuit breaker:
Option 230 V: Line circuit breaker B 6 A: max. 5 devices / Line circuit breaker B 16 A: max. 13 devices
Option 24 V: Line circuit breaker B 6 A: max. 3 devices / Line circuit breaker B 16 A: max. 10 devices

VOLTAGE MEASUREMENT

Three-phase 4-conductor systems with rated voltages up to	277 V / 480 V (+10 %) (TN/TT)
Three-phase 3-conductor systems, grounded or non-grounded, with rated voltages up to	IT 480 V (±10 %) (TN/TT, IT)
Measurement category	300 V CAT III
Rated surge voltage	4 kV
Protection of the voltage measurement	1–10 A tripping characteristic B (with IEC/UL approval)
Measuring range L-N	0[1]–300 V_{eff} (max. overvoltage 520 V_{eff})
Measuring range L-L	0[1]–510 V_{eff} (max. overvoltage 900 V_{eff})
Resolution	0.01 V
Crest faktor	2.45 (related to the measuring range)
Impedance	3 MΩ/phase
Power consumption	approx. 0.1 VA
Sampling frequency (per measurement channel)	21.33 kHz (50 Hz), 25.6 kHz (60 Hz)
Frequency of the fundamental oscillation Resolution	45 Hz–65 Hz 0.01 Hz
Fourier analysis	1st–40th harmonic

1) The UMG 96-EL can only determine measured values if a voltage L1-N of greater than 20 V_{eff} (4-wire measurement) or a voltage L1-L2 greater than 34 V_{eff} (3-wire measurement) is present at voltage measurement input V1.

CURRENT MEASUREMENT

Nominal current	5 A
Measuring range	0.005–6 A_{eff}
Crest faktor	1.98
Resolution	0.1 mA (display 0,01 A)
Measurment category	300 V CAT II
Rated surge voltage	2 kV
Power consumption	approx. 0.2 VA (Ri = 5 mΩ)
Overload for 1 s	120 A (sinusoidal)
Sampling frequency (per measurement channel)	21.33 kHz (50 Hz), 25.6 kHz (60 Hz)
Fourier analysis	1st–40th Harmonics

TERMINAL CONNECTION CAPACITY (SUPPLY VOLTAGE)

Connectible conductors. Only one conductor may be connected per contact point!

Single core, multi-core, fine-stranded	0.2–4 mm², AWG 24-12
Terminal pins, wire ferrules	0.2–2.5 mm²
Tightening torque	0.4–0.5 Nm (3.54–4.43 lbf in)
Strip length	7 mm (0.276 in)

CONNECTION CAPACITY OF THE TERMINALS (CURRENT MEASUREMENT)

Connectible conductors. Only one conductor may be connected per contact point!

Single core, multi-core, fine-stranded	0.2–4 mm², AWG 24-12
Wire ferrules without collar	0.2–4 mm²
Wire ferrules with plastic collar	0.2–2.5 mm²
Tightening torque	0.4–0.5 Nm (3.54–4.43 lbf in)
Strip length	7 mm (0.276 in)

CONNECTION CAPACITY OF THE TERMINALS (VOLTAGE MEASUREMENT)

Connectible conductors. Only one conductor may be connected per contact point!

Single core, multi-core, fine-stranded	0.2–4 mm², AWG 24-12
Wire ferrules without collar	0.2–2.5 mm²
Wire ferrules with plastic collar	0.2–2.5 mm²
Tightening torque	0.4–0.5 Nm (3.54–4.43 lbf in)
Strip length	7 mm (0.276 in)

ETHERNET INTERFACE

Connection	RJ45
Protocols and services	TCP/IPv4, ICMP, DHCP client (BootP), Modbus/TCP (port 502), Identity port (port 1111), MQTT as of firmware 1.1.0 (port configurable)

POTENTIAL ISOLATION AND ELECTRICAL SAFETY OF THE INTERFACES

The Ethernet interface has double insulation to the voltage and current measurement inputs and to the supply voltage.
The interfaces of the connected devices require double or reinforced insulation to mains voltages (according to IEC 61010-1).

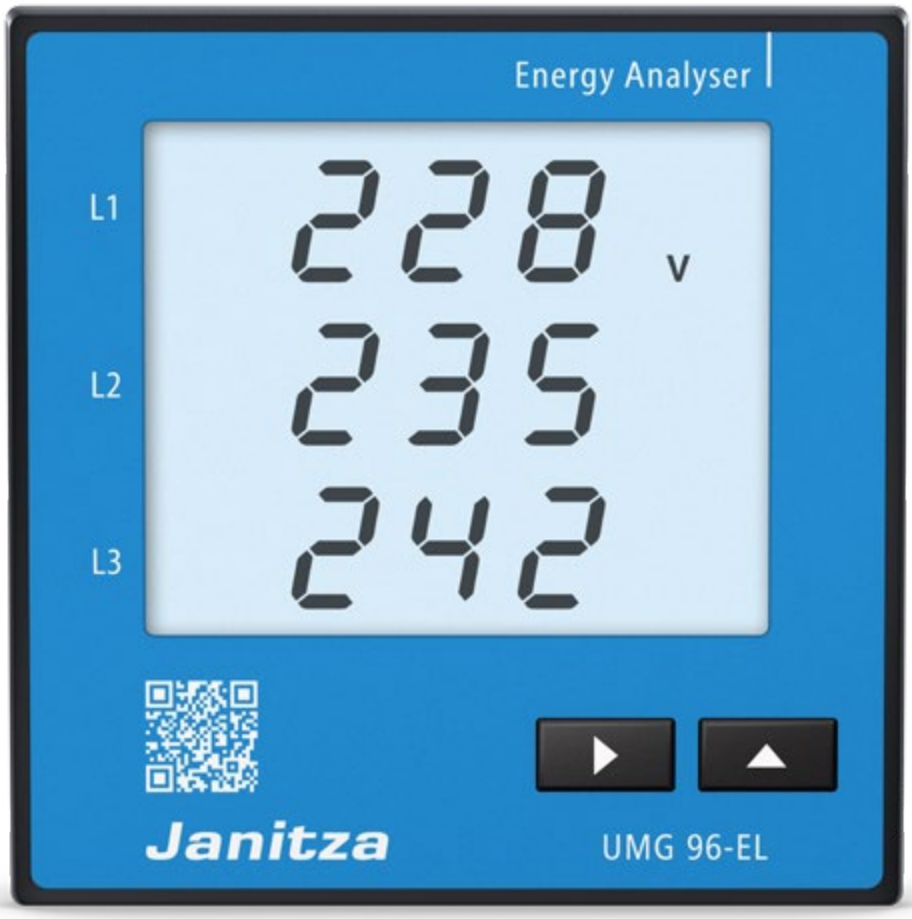

UMG 96RM Series

MULTIFUNCTIONAL ENERGY ANALYZER

INTERFACES (DEVICE SPECIFIC)
- RS-485
- Profibus
- Profinet
- M-Bus
- USB

COMMUNICATION (DEVICE SPECIFIC)
- Modbus RTU
- Profibus DP Vo
- Profinet
- TCP/IP
- M-Bus

POWER QUALITY
- Harmonics up to the 40th harmonic
- Rotating field components
- Distortion factor THD-U / THD-I

ENERGY MANAGEMENT
- Load profiles
- 8 tariffs

MEASURING ACCURACY
- Class 0.2S
- Current 0.2%
- Voltage 0.2%

UP TO 6 DIGITAL OUTPUTS
- Pulse output
- Switch output
- Limit value output
- Logic output
- Remote via Modbus/Profibus

UP TO 4 DIGITAL INPUTS
- Pulse input
- Logic input
- State monitoring

UMG 96RM Series



ENERGY MANAGEMENT

Extensive energy measurement data, high accuracy: 0.5S active energy

COMMUNICATION

RS-485, Modbus RTU onboard in basic device, various interfaces

DISPLAY

Simple 2-button operation/ LED backlight

UMG 96RM – DIMENSIONED DRAWING

All dimensions in mm

Side view, UMG 96RM

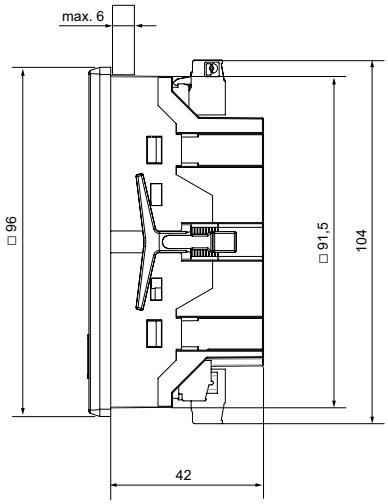

Rear view, UMG 96RM (basic device)

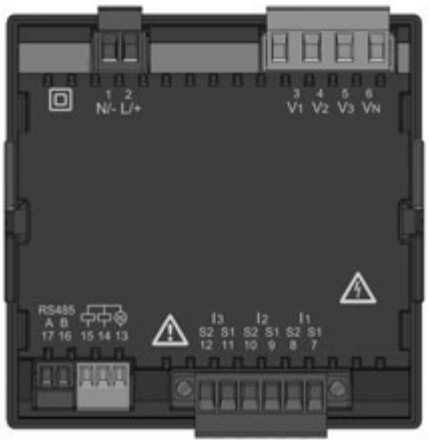

Cutout dimensions: $92^{+0.8}$ x $92^{+0.8}$ mm

The illustrations shown here are examples. Further dimensional and connection diagrams can be requested or viewed on our homepage.

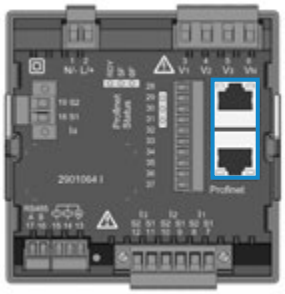

Rear view UMG 96RM-PN
Profinet variant

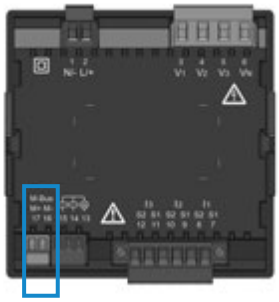

Rear view UMG 96RM-M
M-Bus variant

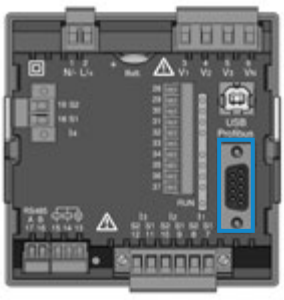

Rear view UMG 96RM-P
Profibus variant

UMG 96RM – CONNECTION EXAMPLE

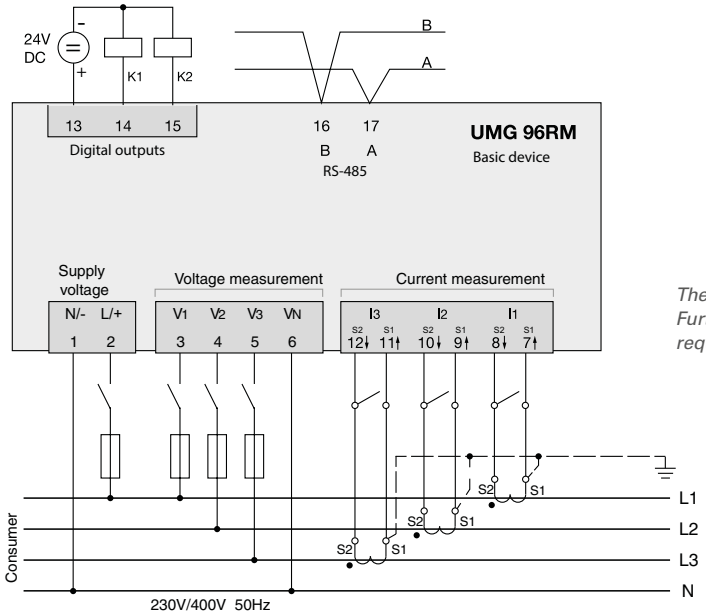

The illustration shown here is an example. Further connection diagrams can be requested or viewed on our homepage.



Fig.: Battery slot on the rear (UMG 96RM-P)



Fig.: UMG 96RM-PN with Profinet interface

TECHNICAL DATA

	UMG 96RM*1	UMG 96RM-M*1	UMG 96RM-P*1	UMG 96RM-PN*1
ITEM NO. (90–277 VAC/90–250 VDC)	**5222061**	**5222069**	**5222064**	**5222090**
ITEM NO. (24–90 VAC/90–250 VDC)	**5222070**	**5222073**	**5222065**	**5222091**
Interfaces	RS-485	M-Bus	RS-485, Profibus, USB	RS-485, Ethernet, Profinet
PROTOCOLS				
Modbus RTU	•	–	•	•
Modbus TCP	–	–	–	•
Profibus DP V0	–	–	•	–
Profinet	–	–	–	•
M-Bus	–	•	–	–
DHCP or DCP	–	–	–	•
ICMP (ping)	–	–	–	•
MEASUREMENT DATA RECORDING				
Current measurement channels	3	3	4	4 (+2)
Memory size / recording duration (according to factory setting)	–	–	256 MB / approx. 2 months	–
Battery	–	–	Type CR2032 3 V, Li-Mn	–
Clock	–	–	•	–
DIGITAL INPUTS AND OUTPUTS				
Digital inputs	–	–	4	3*3
Digital outputs (as switching or pulse output)	2	2	6	2 (+3)*3
MECHANICAL PROPERTIES				
Device dimensions in mm (W x H x D)*2	96 x 96 x approx. 48	96 x 96 x approx. 48	96 x 96 x approx. 78	96 x 96 x approx. 78

Comment: For detailed technical information, please refer to the operating manual and the Modbus address list.

• = included – = not included

**1 UL certification included.*
**2 For exact device dimensions, see operating manual.*
**3 Optional 3 digital inputs or outputs (no pulse output)*

GENERAL

Net weight	265 g (RM) / 300 g (RM-M) / 358 g (RM-P) / 380 g (RM-PN)
Net weight (with attached connectors)	300 g
Device dimensions	approx. l = 42 mm, b = 97 mm, h = 100 mm
Service life of the backlight	40,000 hours (50 % of initial brightness)

TRANSPORT AND STORAGE

The following information applies to devices that are transported or stored in their original packaging.

Free fall	1 m
Temperature	K55 (–25 °C to +70 °C)
Relative humidity	0 to 90 % RH

AMBIENT CONDITIONS DURING OPERATION

The UMG 96RM is intended for weather-protected, stationary use. Protection class II according to IEC 60536 (VDE 0106, Part 1).	
Rated temperature range	K55 (–10 °C to +55 °C)
Relative humidity	0 to 75 % RH
Operating elevation	0 to 2000 m above sea level
Degree of pollution	2
Installation position	vertical
Ventilation	Forced ventilation is not required
Foreign body and water protectio – Front – Rear – Front with seal	 IP40 according to EN60529 IP20 according to EN60529 IP54 according to EN60529

POWER SUPPLY VOLTAGE

Option 230 V: Nominal range Power consumption	 AC 90 V–277 V (50/60 Hz) or DC 90 V–250 V; 300 V CAT III max. 4.5 VA / 2 W (RM-M) max. 7.5 VA / 4 W (RM) max. 7.5 VA / 4 W (RM-P) max. 8.5 VA / 5 W (RM-PN)
Option 24 V: Nominal range Power consumption	 24 V–90 V AC / DC; 150 V CAT III max. 2.5 VA / 2 W (RM-M) max. 3.5 VA / 2 W (RM) max. 6.5 VA / 5 W (RM-P) max. 7 VA / 5 W (RM-PN)
Operating range	±10 % of nominal range
Internal fuse, not replaceable	Type T1A / 250 V/277 V according to IEC 60127
Recommended overcurrent protective device for the line protection (certified under UL)	Option 230 V: 6–16 A Option 24 V: 1–6 A (Char. B)

Recommendation for a maximum number of devices on a circuit breaker:
Option 230 V : Circuit breaker B6A: max. 4 devices / Circuit breaker B16A: max. 11 devices
Option 24 V : Circuit breaker B6A: max. 3 devices / Circuit breaker B16A: max. 9 devices

CONNECTION CAPACITY OF THE TERMINALS (POWER SUPPLY)

Connectable conductor. Only one conductor may be connected per contact point!

Single-wire, multi-wire, finely stranded conductor	0.2–2.5 mm², AWG 26-12
Pin terminals, ferrules	0.2–2.5 mm²
Tightening torque	0.4–0.5 Nm
Stripping length	7 mm

OUTPUTS

2 digital outputs, semi-conductor relay, not short circuit protected.

Switching voltage	max. 33 V AC, 60 V DC
Switching current	max. 50 mA_{eff} AC/DC
Reaction time	10/12 periods + 10 ms*
Pulse output (energy pulses)	max. 50 Hz

** Reaction time at 50 Hz, for example: 200 ms + 10 ms = 210 ms*

CONNECTION CAPACITY OF THE TERMINALS (OUTPUTS)

Rigid/flexible	0.14–1.5 mm^2 , AWG 28-16
Flexible with ferrules without plastic sleeve	0,20–1,5mm^2
Flexible with ferrules with plastic sleeve	0,20–1,5mm^2
Tightening torque	0,20–0,25 Nm
Stripping length	7 mm

VOLTAGE METERING

Three-phase, 4-wire systems with nominal voltages up to	277 V/480 V (±10 %)
Three-phase, 3-wire systems, unearthed, with nominal voltages up to	IT 480 V (±10 %)
Overvoltage category	300V CAT III
Rated surge voltage	4 kV
Measuring range L-N	0[1] to 300 V_{rms} (max. overvoltage 520 V_{rms})
Measuring range L-L	0[1] to 520 V_{rms} (max. overvoltage 900 V_{rms})
Resolution	0.01 V
Crest factor	2.45 (related to the measuring range)
Impedance	3 MΩ/phase
Power consumption	approx. 0.1 VA
Sampling rate	21.33 kHz (50 Hz), 25.6 kHz (60 Hz) per measuring channel
Mains frequency Resolution	45 Hz to 65 Hz 0.01 Hz

1) The UMG 96RM can only detect measurements when a voltage L1-N greater than 20 V_{eff} (4-wire measurement) at voltage input V1 or a voltage L1-L2 greater than 34 V_{eff} (3-wire measurement) is applied.

CURRENT MEASUREMENT

Ratedl current	5 A
Metering range	0 to 6 Arms
Crest factor	1.98
Resolution	0.1 mA (display 0.01 A)
Overvoltage category	300 V CAT II
Rated surge voltage	2 kV
Power consumption	approx. 0.2 VA (Ri = 5 mΩ)
Overload for 1 s	120 A (sinusoidal)
Sampling rate	21.33 kHz (50 Hz), 25.6 kHz (60 Hz) per measuring channel

CONNECTION CAPACITY OF THE TERMINALS (VOLTAGE AND CURRENT MEASUREMENT)

Connectable conductor. Only one conductor may be connected per terminal!

	Current	**Voltage**
Single core, multi-core, finely stranded conductor	0.2–2.5 mm^2, AWG 26-12	0.08–4 mm^2, AWG 28-12
Terminal pins, wire ferrules	0.2–2.5 mm^2	0.2–2.5 mm^2
Tightening torque	0.4–0.5 Nm	0.4–0.5 Nm
Stripping length	7 mm	7 mm

SERIAL INTERFACE	
RS485 - Modbus RTU/slave	9.6 kbps, 19.2 kbps, 38.4 kbps, 57.6 kbps, 115.2 kbps
Stripping length	7 mm

CONNECTION CAPACITY OF THE TERMINALS (SERIAL INTERFACE) Connectible conductors. Only one conductor may be connected per terminal!	
Single-wire, multi-wire, finely stranded conductor	0.2–1.5 mm²
Pin terminals, ferrules	0.2–1.5 mm²
Tightening torque	0.2–0.25 Nm (1.77 - 2.21 lbf in)
Stripping length	7 mm (0.2756 in)

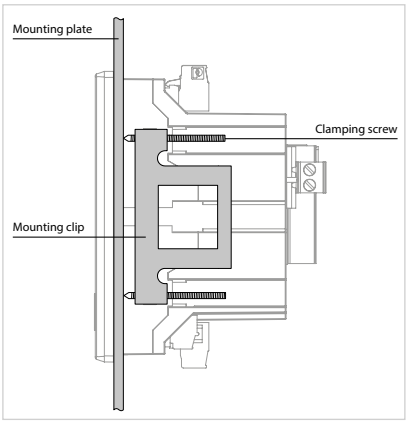

Fig.: The mounting into a switchboard is done via the lateral fastening clips (UMG 96RM-P)

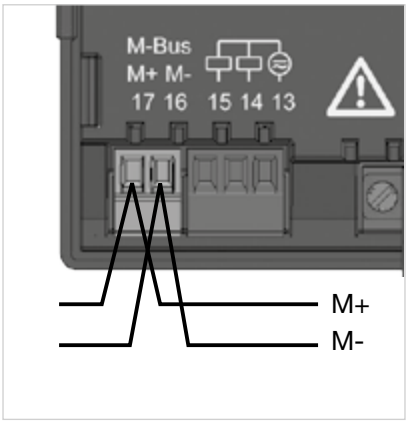

Fig.: M-Bus interface with 2-pole plug contact



Fig.: 2-pole plug contact with cable connection (cable type: 2 x 0.75 mm²) via twin wire ferrules

MODULARLY EXPANDABLE NETWORK ANALYZER



MODULAR
- Plug-on module
- Temperature measurement
- 4th current input
- 2 residual current inputs
- Ethernet interface

INTERFACES
- RS-485

OVERVOLTAGE CATEGORY
- 600 V CAT III

MEASUREMENT DATA MEMORY
- 8 MB/approx. 3 months; MID+ meter reading cycle: approx. 24 months (according to factory setting)

MEASURING ACCURACY
- Class 0.2S
- Current: 0.2 %
- Voltage: 0.2 %

POWER QUALITY
- Harmonics current up to the 40th harmonic
- Distortion factor THD-U/THD-I

PERIPHERALS
- 3 digital inputs and outputs
- 1 analog output

COLOR GRAPHIC DISPLAY
- 6-button operation
- Measured values numerically, as diagram or graph
- Intuitive operation

UMG 96-PA



MODULAR

Future-proof thanks to retrofittable modules

DISPLAY

Device configuration via color graphic display & 6-button operation

SAFETY

High dielectric strength of 600 V CAT III

DIMENSIONED DRAWING

All dimensions in mm

Side view

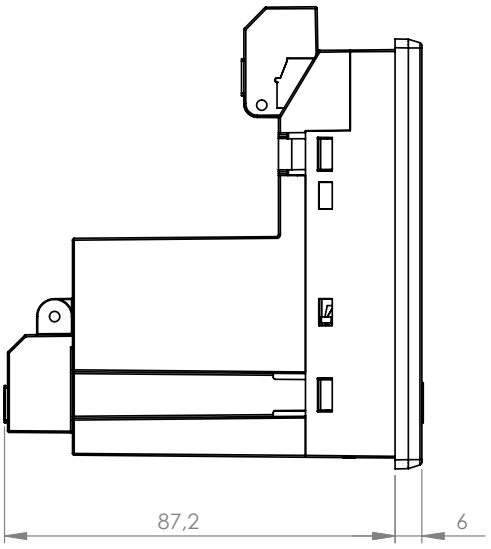

Bottom view

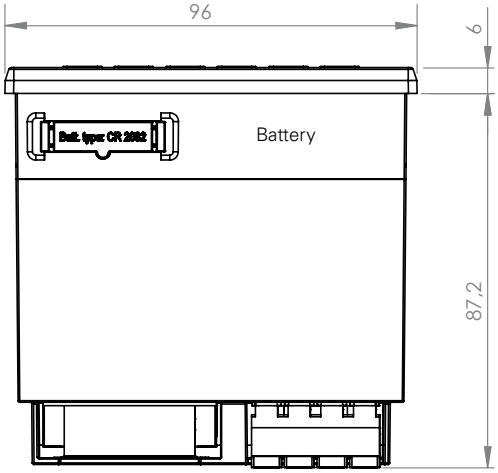

Cutout dimensions: $92^{+0.8}$ x $92^{+0.8}$ mm

CONNECTION EXAMPLE

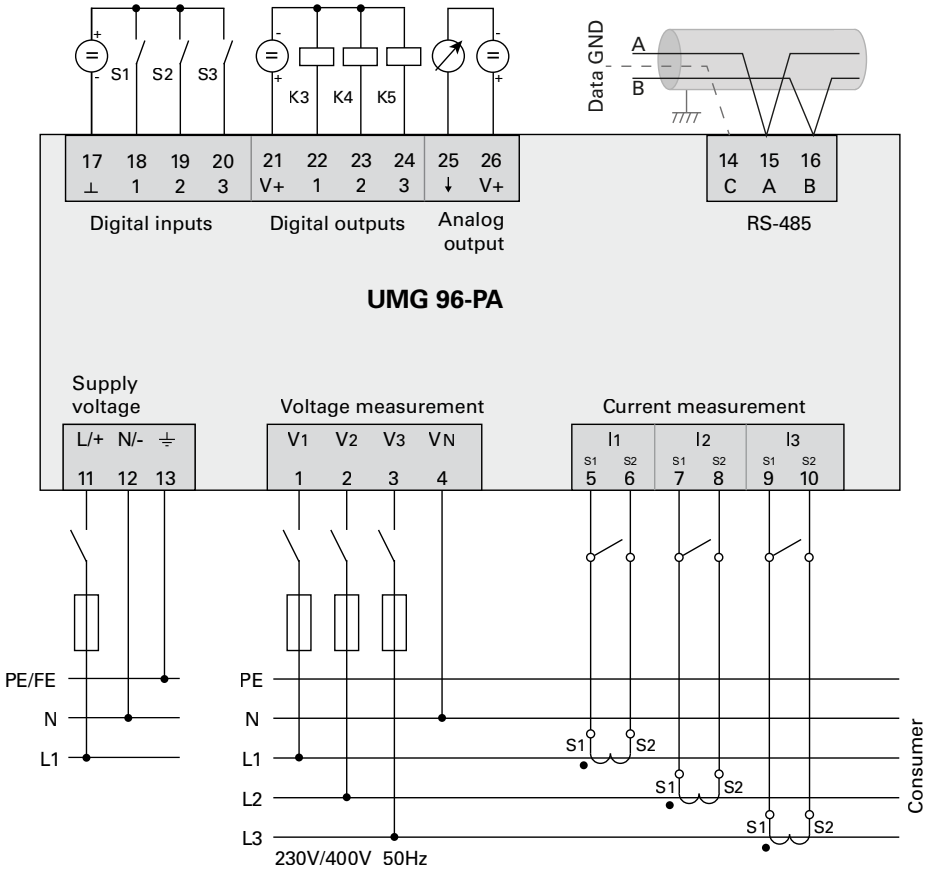

TECHNICAL DATA

UMG 96-PA (basic device without MID)	
ITEM NO. (90–277 VAC / 90–250 VDC)	**5232001**
ITEM NO. (24–90 VAC / 24–90 VDC)	**5232002**
GENERAL	
Net weight (with attached plug-in connectors)	approx. 250 g (0.55 lbs)
Package weight (incl. accessories)	approx. 500 g (1.1 lbs)
Battery	Type Lithium CR2032, 3 V, (UL 1642 approved)
Backlight service life	40000 h (backlight reduces to approx. 50 % over this period)
Impact resistance	IK07 according to IEC 62262
TRANSPORT AND STORAGE The following information applies to devices that are transported or stored in their original packaging.	
Free fall	1 m (39.37 in)
Temperature	–25 °C to +70 °C (–13 °F to 158 °F)
Relative air humidity (non-condensing)	0 to 90 % RH
ENVIRONMENTAL CONDITIONS DURING OPERATION	
Install the device in a weather-protected and stationary location. Protection class II according to IEC 60536 (VDE 0106, Part 1).	
Rated temperature range	–10 °C to +55 °C (14 °F to 131 °F)
Relative air humidity (non-condensing)	0 to 75 % RH
Operating elevation	0 to 2000 m (6562 ft) above sea level
Pollution degree	2
Mounting orientation	As desired
Ventilation	No forced ventilation required
Protection against foreign matter and water – Front – Rear – Front with seal	 IP40 according to EN60529 IP20 according to EN60529 IP54 according to EN60529
SUPPLY VOLTAGE	
Option 230 V: Nominal range Power consumption	 AC 90 V–277 V (50/60 Hz) or DC 90 V–250 V, 300 V CAT III max. 4.5 VA / 2 W
Option 24 V* Nominal range Power consumption	 AC 24 V–90 V (50/60 Hz) or DC 24 V–90 V, 150 V CAT III max. 4.5 VA / 2 W
Operating range	±10 % of nominal range
Internal fuse, not replaceable	Type T1A / 250 V DC / 277 V AC according to IEC 60127
Recommended overcurrent protective device for the line protection (UL approval)	Option 230 V: 6–16 A (Char. B) Option 24 V*: 1–6 A (Char. B)

*** The 24 V option only applies to the UMG 96-PA!**

Recommendation for the maximum number of devices on a line circuit breaker:
Option 230 V: Line circuit breaker B6A: max. 4 devices / line circuit breaker B16A: max. 11 devices
Option 24 V: Line circuit breaker B6A: max. 3 devices / line circuit breaker B16A: max. 9 devices

VOLTAGE MEASUREMENT

3-phase 4-conductor systems with rated voltages up to	417 V / 720 V (±10 %) according to IEC 347 V / 600 V (±10 %) according to UL
Single-phase 2-conductor system with rated voltages up to	480 V (±10 %)
Overvoltage category	600 V CAT III
Rated surge voltage	6 kV
Protection of the voltage measurement	1–10 A (with IEC/UL approval)
Measuring range L-N	0[1] to 600 V_{rms} (max. overvoltage 800 V_{rms})
Measuring range L-L	0[1] to 1040 V_{rms} (max. overvoltage 1350 V_{rms})
Resolution	0.01 V
Crest factor	2.45 (related to the measuring range)
Impedance	3 MΩ/phase
Power consumption	approx. 0.1 VA
Sampling frequency	8.33 kHz
Frequency of the fundamental oscillation - Resolution	45 Hz to 65 Hz 0.01 Hz
Fourier analysis	1st–40th harmonic

1) The device only determines measured values if a voltage L1-N of greater than 20 V_{eff} (4-conductor measurement) or a voltage L1-L2 of greater than 34 V_{eff} (3-conductor measurement) is applied to voltage measurement input V1.

CURRENT MEASUREMENT

Nominal current	5 A
Measurement range	0.005 to 6 A_{rms}
Crest factor	2 (relative to 6 A_{rms})
Overvoltage category	300 V CAT II
Rated surge voltage	2 kV
Power consumption	approx. 0.2 VA (Ri = 5 mΩ)
Overload for 1 s	60 A (sinusoidal)
Resolution	0.1 mA (display 0.01 A)
Sampling frequency	8.33 kHz
Fourier analysis	1st–40th harmonics

SERIAL INTERFACE

RS-485 - Modbus RTU/Slave	9.6 kbps, 19.2 kbps, 38.4 kbps, 57.6 kbps, 115.2 kbps

DIGITAL OUTPUTS

3 digital outputs, solid state relays, not short-circuit proof.

Switching voltage	max. 33 V AC, 40 V DC
Switching current	max. 50 mA_{eff} AC/DC
Response time	approx. 200 ms
Pulse output	max. 50 Hz (energy pulses)

Digital output 1 (terminal 21/22) of the UMG 96-PA-MID provides the active energy (applied/delivered) measured value!

DIGITAL INPUTS

3 digital inputs, solid state relays, not short-circuit proof.

Maximum counter frequency	20 Hz
Input signal applied	18 V to 28 V DC (typically 4 mA)
Input signal not applied	0 to 5 V DC, current less than 0.5 mA

CABLE LENGTH (DIGITAL INPUTS/OUTPUTS)

Up to 30 m (32.81 yd)	Unshielded
Greater than 30 m (32.81 yd)	Shielded

ANALOG OUTPUTS	
External power supply	max. 33 V
Current	0 to 20 mA
Update time	1 s
Load	max. 300 Ω
Resolution	10 bit

CONNECTION CAPACITY OF THE TERMINALS (SUPPLY VOLTAGE) Connectible conductors. Only connect one conductor per terminal!	
Single core, multi-core, fine-stranded	0.2–4.0 mm², AWG 28-12
Wire ferrules (non-insulated)	0.2–2.5 mm², AWG 26-14
Wire ferrules (insulated)	0.2–2.5 mm², AWG 26-14
Tightening torque	0.4–0.5 Nm (3.54–4.43 lbf in)
Strip length	7 mm (0.2756 in)

CONNECTION CAPACITY OF THE TERMINALS (VOLTAGE MEASUREMENT) Connectible conductors. Only connect one conductor per terminal!	
Single core, multi-core, fine-stranded	0.2–4.0 mm², AWG 28-12
Wire ferrules (non-insulated)	0.2–2.5 mm², AWG 26-14
Wire ferrules (insulated)	0.2–2.5 mm², AWG 26-14
Tightening torque	0.4–0.5 Nm (3.54–4.43 lbf in)
Strip length	7 mm (0.2756 in)

CONNECTION CAPACITY OF THE TERMINALS (CURRENT MEASUREMENT) Connectible conductors. Only connect one conductor per terminal!	
Single core, multi-core, fine-stranded	0.2–4 mm², AWG 28-12
Wire ferrules (non-insulated)	0.2–4 mm², AWG 26-12
Wire ferrules (insulated)	0.2–2.5 mm², AWG 26-14
Tightening torque	0.4–0.5 Nm (3.54–4.43 lbf in)
Strip length	7 mm (0.2756 in)

TERMINAL CONNECTION CAPACITY (SERIAL INTERFACE) Connectible conductors. Only connect one conductor per terminal!	
Single core, multi-core, fine-stranded	0.2–1.5 mm², AWG 28-16
Wire ferrules (non-insulated)	0.2–1.5 mm², AWG 26-16
Wire ferrules (insulated)	0.2–1.5 mm², AWG 26-16
Tightening torque	0.2–0.25 Nm (1.77–2.21 lbf in)
Strip length	7 mm (0.2756 in)

CONNECTION CAPACITY OF THE TERMINALS (DIGITAL INPUTS / OUTPUTS, ANALOG OUTPUT) Connectible conductors. Only connect one conductor per terminal!	
Single core, multi-core, fine-stranded	0.2–1.5 mm², AWG 28-16
Wire ferrules (non-insulated)	0.2–1.5 mm², AWG 26-16
Wire ferrules (insulated)	0.2–1.5 mm², AWG 26-16
Tightening torque	0.2–0.25 Nm (1.77–2.21 lbf in)
Strip length	7 mm (0.2756 in)

96-RCM-E Module

MODULAR EXPANSION FOR THE UMG 96-PA METER

Module 96-RCM-E*

- Ethernet interface
- 2 residual current inputs
- Temperature measurement
- 4th current input
- DC measurement



MODULE CONNECTIONS

Front view

Rear view

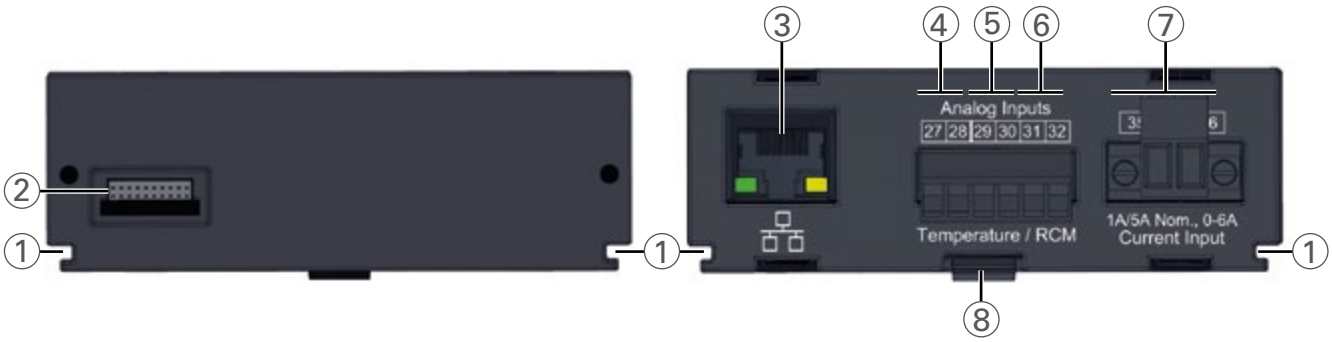

NO.	DESIGNATION	DESCRIPTION
1	Groove	Guide groove for the mounting/dismantling of the module
2	Module connector	Interface to basic device
3	RJ45	Only module 96-RCM-E: Ethernet interface (10/100Base-T)
4	Analog inputs - terminals 27 / 28	Temperature measurement
5	Analog inputs - terminals 29 / 30	Residual current measurement I5
6	Analog inputs - terminals 31 / 32	Residual current measurement I6 or voltage measurement U6 for the DC power
7	Current measurement input - terminals 35 / 36	Current measurement I4
8	Snapping mechanism	For mounting/removal of the module (snap in/snap out).

** With firmware version 3.00, the 96-PA-RCM-EL module is renamed the 96-RCM-E module.*

CONNECTION EXAMPLE

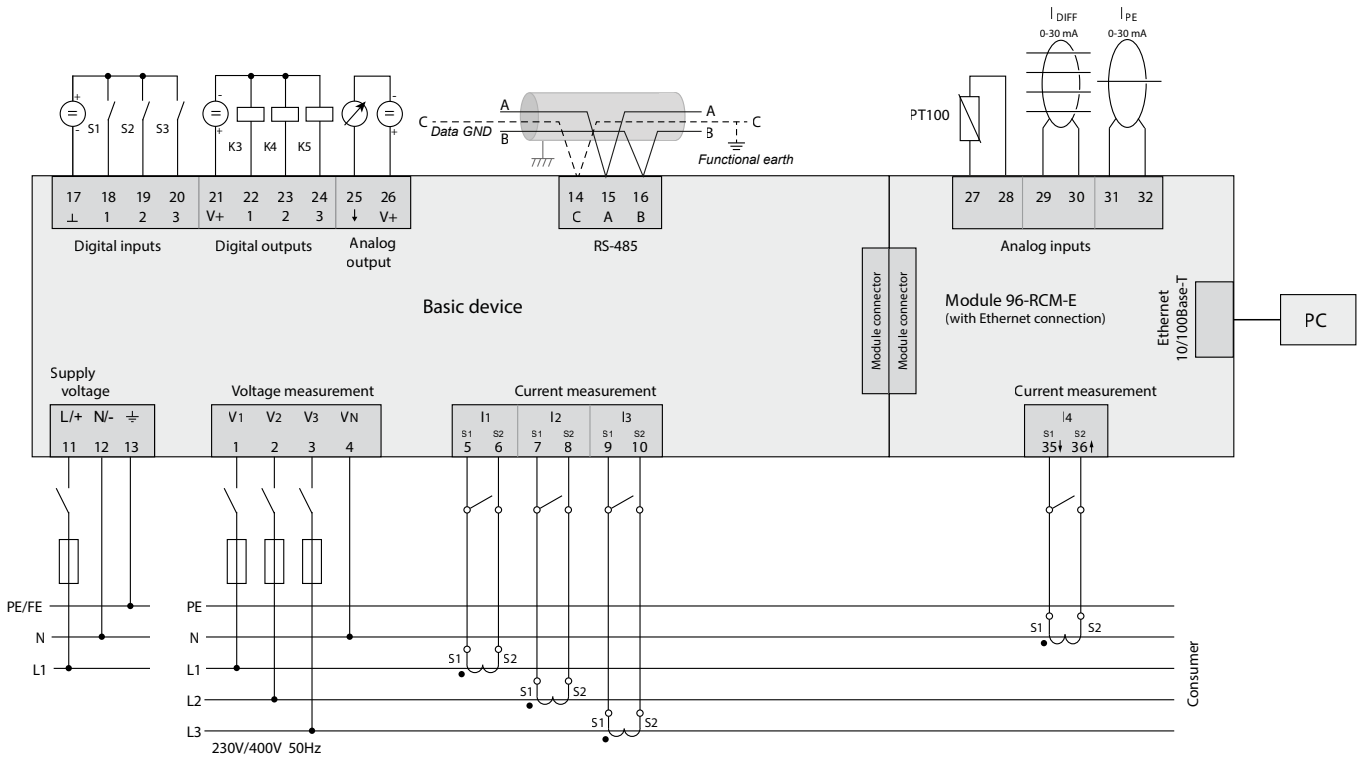

Fig.: Connection example "Basic device with module 96-RCM-E"
Information on overcurrent devices can be found in the user manual of your basic device

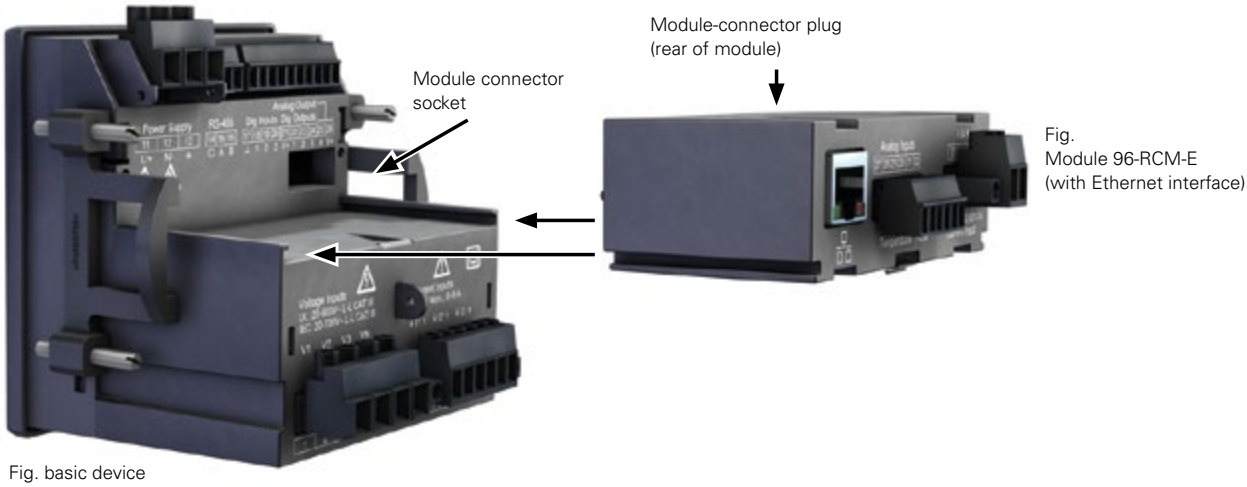

Fig.
Module 96-RCM-E
(with Ethernet interface)

Fig. basic device

TECHNICAL DATA

MODULE 96-RCM-E WITH ETHERNET CONNECTION	
ITEM NO.	**5232010**
GENERAL	
Net weight of module (with attached plug-in connectors)	78 g (0.17 lbs)
Impact resistance	IK07 according to IEC 62262
TRANSPORT AND STORAGE	
The following specifications apply for devices transported and stored in the original packaging.	
Free fall	1 m (39.37 in)
Temperature	K55 –25 °C to +70 °C (–13 °F to 158 °F)
Relative air humidity (non-condensing)	0 to 90 % RH
Environmental conditions during operation, see the usage information for your basic device.	
ANALOG INPUTS	
Differential or current signals	2x
Temperature measurement	1x
RESIDUAL CURRENT INPUT	
Nominal current	30 mA_{rms} | 0 to 20 mA | 4 to 20 mA
Measuring range	0 to 30 mA_{rms}
Operating current	50 µA
Resolution	1 µA
Cable break detection (failure monitoring)	Can be activated
Crest factor	1.414 (relative to 30 mA)
Load	4 Ω
Overload for 1 s	1 A
Constant overloaded	200 mA
Measurement of residual currents	According to IEC/TR 60755 (2008-01): Type A Type B and B+[1)]
1) B+ means extended frequency range, residual current transformers of the B+ type required.	
TEMPERATURE MEASUREMENT	
Update time	200 ms
Suitable thermal sensor	PT100, PT1000, KTY83, KTY84
Total burden (thermal sensor and lead)	max. 4 kΩ

THERMAL SENSOR TYPE	TEMPERATURE RANGE	RESISTANCE RANGE	MEASUREMENT UNCERTAINTY
PT100	–99 °C (–146.2 °F) to +500 °C (932 °F)	60 Ω to 180 Ω	±1.5 % rng
PT1000	–99 °C (–146.2 °F) to +500 °C (932 °F)	600 Ω to 1.8 kΩ	±1.5 % rng
KTY83	–55 °C (–67 °F) to +175 °C (347 °F)	500 Ω to 2.6 kΩ	±1.5 % rng
KTY84	–40 °C (–40 °F) to +300 °C (572 °F)	350 Ω to 2.6 kΩ	±1.5 % rng

96-PTS-60 Module

MODULAR EXPANSION FOR THE UMG 96-PA METER

Module 96-PTS-60

- Buffers the operating voltage in the event of a power failure



MODULE 96-PTS-60 – DIMENSIONED DRAWING

All dimensions in mm

Top view

Side view

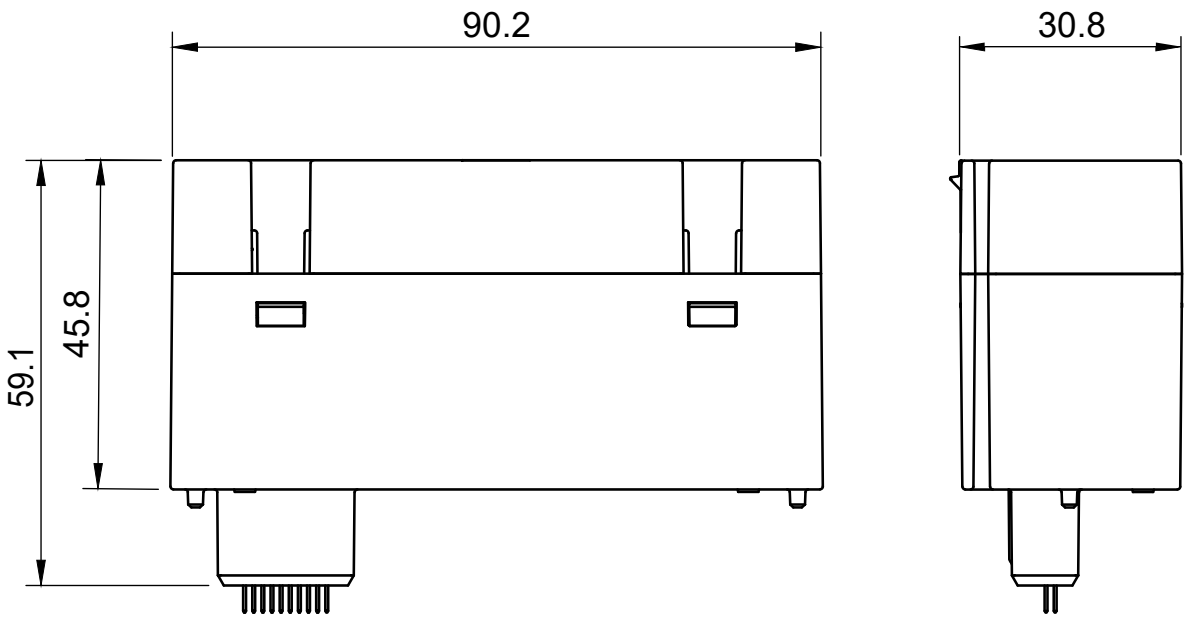

CONNECTION EXAMPLE

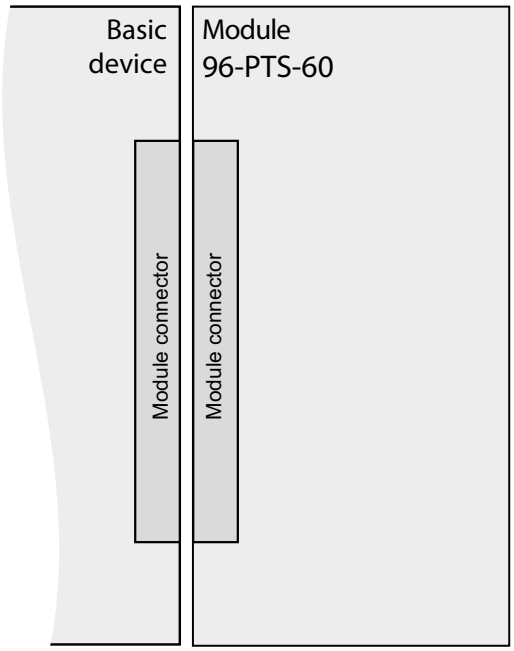

Fig.: Connection example "Basic device with module 96-PTS-60"

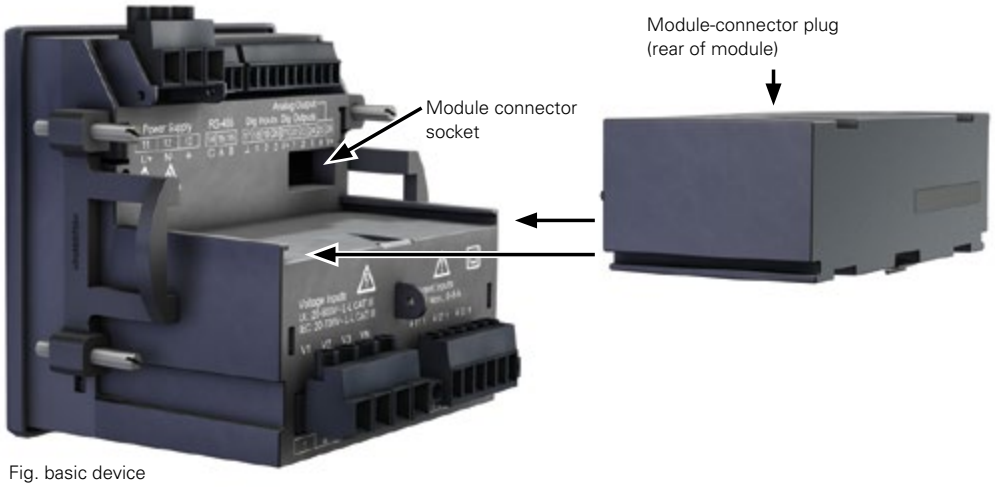

Fig. basic device

Fig.
Module 96-PTS-60

TECHNICAL DATA

MODUL 96-PTS-60	
ITEM NO.	**5232015**
GENERAL	
Net weight	approx. 76 g (0.17 lb)
Package weight (incl. accessories)	approx. 260 g (0.57 lb)
Device dimensions (W x H x D)	approx. 90.2 mm x 30.8 mm x 59.1 mm/45.8 mm (3,55 in x 1.21 in x 2.33 in / 1.8 in)
Device compatibility with	PA series, PQ-L series
Energy in buffer mode (typical)	65 J
Charging	Charging time, approx. 2.5 hrs.
ENVIRONMENTAL CONDITIONS	
Operating temperature	–25 °C to +70 °C (–13 °F to +158 °F)
Storage temperature	–25 °C to +70 °C (–13 °F to +158 °F)
Rel. Humidity	≤ 75 % non-condensing
IP protection class	Front: IP40 Rear: IP20
Pollution degree	2
Service life at 40 °C	approx. 15 years

At the end of the service life, a discharge time of typically at least 60 seconds is still ensured at 50 % backlight brightness.

DURATION OF POWER SUPPLY	
At a display brightness of 100 %	approx. 90 s
At a display brightness of 20 %	approx. 180 s

From firmware 3.44: If the supply of power is interrupted, the display brightness is automatically reduced to 20 %.
A power supply duration of approx. 180 s is ensured.

MAINS OPERATION	
Max. own consumption	600 mW
Average own consumption in idle mode	60 mW

UMG 96-PA[MID+]

MODULARLY EXPANDABLE NETWORK ANALYZER

(MID, METER READING CYCLE)



CERTIFICATION
- MID-compliant and tamper-proof
- Meter reading cycle to PTB-A 50.7
- Updateable according to MID wguidelines (software separation)

EEG
- Legally valid billing & acquisition
- Self-supplier & users of the BesAR

INTERFACES
- RS-485

MODULAR
- Plug-on module
- Temperature measurement
- 4th current input
- 2 residual current inputs
- Ethernet interface

OVERVOLTAGE CATEGORY
- 600 V CAT III

MEASURING ACCURACY
- Class 0.2S
- Current: 0.2 %
- Voltage: 0.2 %

POWER QUALITY
- Harmonics current up to the 40th harmonic
- Distortion factor THD-U/THD-I

PERIPHERALS
- 3 digital inputs and outputs
- 1 analog output

MEASUREMENT DATA MEMORY
- 8 MB/400,000 measured values and two years of meter reading cycle values

UMG 96-PA[MID+]



CERTIFICATION

VDE-tested meter reading cycle measurement according to PTB-A 50.7

MODULAR

Future-proof thanks to retrofittable modules and firmware

ENERGY MANAGEMENT

Standard compliance for secure reimbursement of the EEG apportionment

DIMENSIONED DRAWING

All dimensions in mm

Side view

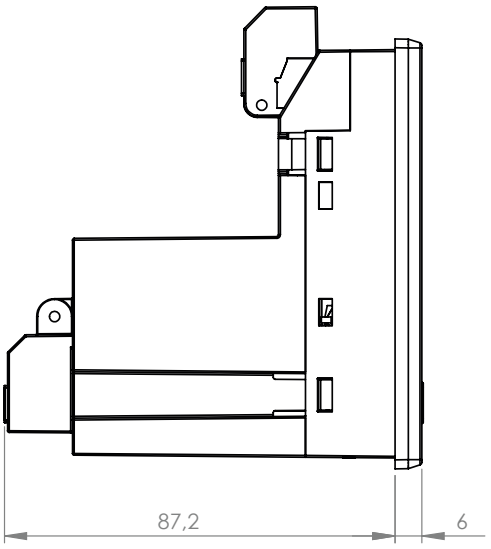

Bottom view

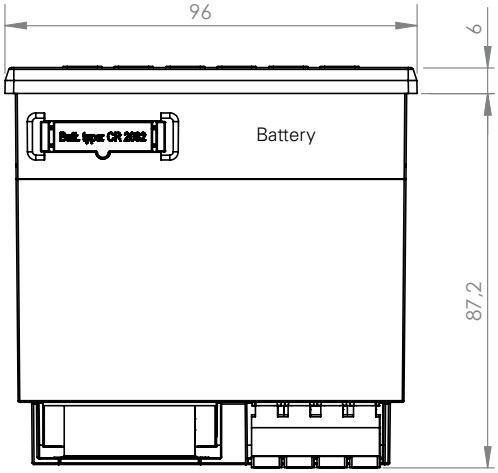

Cutout dimensions: $92^{+0.8}$ x $92^{+0.8}$ mm

CONNECTION EXAMPLE

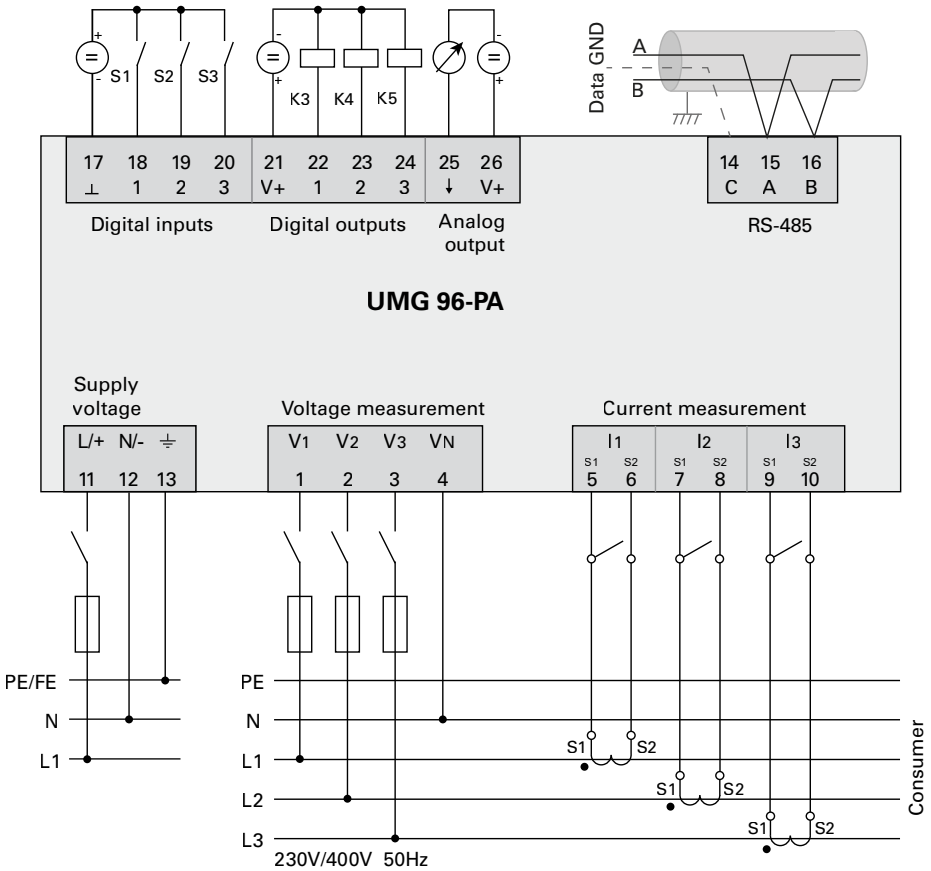

TECHNICAL DATA

UMG 96-PA-MID+ (basic device with MID and meter reading cycle)	
ITEM NO. (90–277 VAC / 90–250 VDC)	**5232004**
GENERAL	
Net weight (with attached plug-in connectors)	approx. 250 g (0.55 lbs)
Package weight (incl. accessories)	approx. 500 g (1.1 lbs)
Battery	Type Lithium CR2032, 3 V, (UL 1642 approved)
Backlight service life	40000 h (backlight reduces to approx. 50 % over this period)
Impact resistance	IK07 according to IEC 62262
TRANSPORT AND STORAGE The following information applies to devices that are transported or stored in their original packaging.	
Free fall	1 m (39.37 in)
Temperature	–25 °C to +70 °C (–13 °F to 158 °F)
Relative air humidity (non-condensing)	0 to 90 % RH
ENVIRONMENTAL CONDITIONS DURING OPERATION	
Install the device in a weather-protected and stationary location. Protection class II according to IEC 60536 (VDE 0106, Part 1).	
Rated temperature range	–10 °C to +55 °C (14 °F to 131 °F)
Relative air humidity (non-condensing)	0 to 75 % RH
Operating elevation	0 to 2000 m (6562 ft) above sea level
Pollution degree	2
Mounting orientation	As desired
Ventilation	No forced ventilation required
Protection against foreign matter and water – Front – Rear – Front with seal	 IP40 according to EN60529 IP20 according to EN60529 IP54 according to EN60529
SUPPLY VOLTAGE	
Option 230 V: Nominal range Power consumption	 AC 90 V–277 V (50/60 Hz) or DC 90 V–250 V, 300 V CAT III max. 4.5 VA / 2 W
Operating range	±10 % of nominal range
Internal fuse, not replaceable	Type T1A / 250 V DC / 277 V AC according to IEC 60127
Recommended overcurrent protective device for the line protection (UL approval)	Option 230 V: 6 – 16 A (Char. B)

Recommendation for the maximum number of devices on a line circuit breaker:
Option 230 V: Line circuit breaker B6A: max. 4 devices / line circuit breaker B16A: max. 11 devices

VOLTAGE MEASUREMENT

3-phase 4-conductor systems with rated voltages up to	417 V / 720 V (±10 %) according to IEC 347 V / 600 V (±10 %) according to UL MID: see table „Technical data for the MID+ certified meter"
Single-phase 2-conductor system with rated voltages up to	480 V (±10 %)
Overvoltage category	600 V CAT III
Rated surge voltage	6 kV
Protection of the voltage measurement	1–10 A (with IEC/UL approval)
Measuring range L-N	0[1] to 600 V_{rms} (max. overvoltage 800 V_{rms})
Measuring range L-L	0[1] to 1040 V_{rms} (max. overvoltage 1350 V_{rms})
Resolution	0.01 V
Crest factor	2.45 (related to the measuring range)
Impedance	3 MΩ/phase
Power consumption	approx. 0.1 VA
Sampling frequency	8.33 kHz
Frequency of the fundamental oscillation - Resolution	45 Hz to 65 Hz 0.01 Hz
Fourier analysis	1st–40th harmonics

1) The device only determines measured values if a voltage L1-N of greater than 20 V_{eff} (4-conductor measurement) or a voltage L1-L2 of greater than ≈34 V_{eff} (3-conductor measurement) is applied to voltage measurement input V1.

CURRENT MEASUREMENT

Nominal current	5 A
Measuring range	0.005 to 6 Arms
Crest factor	2 (relative to 6 A_{rms})
Overvoltage category	300 V CAT II
Rated surge voltage	2.5 kV
Power consumption	approx. 0.2 VA (Ri = 5 mΩ)
Overload for 1 s	60 A (sinusoidal)
Resolution	0.1 mA (display 0.01 A)
Sampling frequency	8.33 kHz
Fourier analysis	1st–40th harmonic

SERIAL INTERFACE

RS-485 - Modbus RTU/Slave	9.6 kbps, 19.2 kbps, 38.4 kbps, 57.6 kbps, 115.2 kbps

DIGITAL OUTPUTS (3 digital outputs, solid state relays, not short-circuit proof)

Switching voltage	max. 33 V AC, 40 V DC
Switching current	max. 50 mA_{eff} AC/DC
Response time	approx. 200 ms
Pulse output	max. 50 Hz (energy pulses)

Digital output 1 (terminal 21/22) of the UMG 96-PA-MID provides the active energy (applied/delivered) measured value!

DIGITAL INPUTS (3 digital inputs, solid state relays, not short-circuit proof)

Maximum counter frequency	20 Hz
Input signal applied	18 V to 28 V DC (typically 4 mA)
Input signal not applied	0 to 5 V DC, current less than 0.5 mA

CABLE LENGTH (DIGITAL INPUTS/OUTPUTS)

Up to 30 m (32.81 yd)	Unshielded
Greater than 30 m (32.81 yd)	Shielded

ANALOG OUTPUTS

External power supply	max. 33 V
Current	0 to 20 mA
Update time	1 s
Load	max. 300 Ω
Resolution	10 bit

CONNECTION CAPACITY OF THE TERMINALS (SUPPLY VOLTAGE)
Connectible conductors. Only connect one conductor per terminal!

Single core, multi-core, fine-stranded	0.2–4.0 mm², AWG 28-12
Wire ferrules (non-insulated)	0.2–2.5 mm², AWG 26-14
Wire ferrules (insulated)	0.2–2.5 mm², AWG 26-14
Tightening torque	0.4–0.5 Nm (3.54–4.43 lbf in)
Strip length	7 mm (0.2756 in)

CONNECTION CAPACITY OF THE TERMINALS (VOLTAGE MEASUREMENT)
Connectible conductors. Only connect one conductor per terminal!

Single core, multi-core, fine-stranded	0.2–4.0 mm², AWG 28-12
Wire ferrules (non-insulated)	0.2–2.5 mm², AWG 26-14
Wire ferrules (insulated)	0.2–2.5 mm², AWG 26-14
Tightening torque	0.4–0.5 Nm (3.54–4.43 lbf in)
Strip length	7 mm (0.2756 in)

CONNECTION CAPACITY OF THE TERMINALS (CURRENT MEASUREMENT)
Connectible conductors. Only connect one conductor per terminal!

Single core, multi-core, fine-stranded	0.2–4 mm², AWG 28-12
Wire ferrules (non-insulated)	0.2–4 mm², AWG 26-12
Wire ferrules (insulated)	0.2–2.5 mm², AWG 26-14
Tightening torque	0.4–0.5 Nm (3.54–4.43 lbf in)
Strip length	7 mm (0.2756 in)

TERMINAL CONNECTION CAPACITY (SERIAL INTERFACE)
Connectible conductors. Only connect one conductor per terminal!

Single core, multi-core, fine-stranded	0.2–1.5 mm², AWG 28-16
Wire ferrules (non-insulated)	0.2–1.5 mm², AWG 26-16
Wire ferrules (insulated)	0.2–1.5 mm², AWG 26-16
Tightening torque	0.2–0.25 Nm (1.77–2.21 lbf in)
Strip length	7 mm (0.2756 in)

CONNECTION CAPACITY OF THE TERMINALS (DIGITAL INPUTS/OUTPUTS, ANALOG OUTPUT)
Connectible conductors. Only connect one conductor per terminal!

Single core, multi-core, fine-stranded	0.2–1.5 mm², AWG 28-16
Wire ferrules (non-insulated)	0.2–1.5 mm², AWG 26-16
Wire ferrules (insulated)	0.2–1.5 mm², AWG 26-16
Tightening torque	0.2–0.25 Nm (1.77–2.21 lbf in)
Strip length	7 mm (0.2756 in)

TECHNICAL DATA FOR THE MID+ CERTIFIED METER

Voltage measurement Three-phase 4-conductor systems with nominal voltages up to	3 x 57.7/100 V ... 3 x 289/500 V[1)]
Current measurement (measuring range)	0.002 to 6 A
Frequency range	45–65 Hz
Reference frequency	50 Hz
Accuracy class	B
Pulse valency S0 (pulse constant)	10,000 pulses/kWh[2)]
Electromagnetic environmental conditions	Class E2 (MID 2014/32/EU)
Mechanical environmental conditions	Class M1 (MID 2014/32/EU)

1) The following applies for the UMG 96-PA-MID+ when measuring voltage using voltage transformers:
Use calibrated/permissible voltage transformers for MID-compliant measurement (secondary: 3 x 57.7/100 V – 3 x 230/400 V).
2) The pulse valency S0 is automatically adapted to the voltage transformer ratio that has been set.
The current pulsce valency S0 appears in the measuring display Active energy.

96-RCM-E Module

MODULAR EXPANSION FOR THE UMG 96-PA-MID+ METER

Module 96-RCM-E*

- Ethernet interface
- 2 residual current inputs
- Temperature measurement
- 4th current input
- DC measurement



MODULE CONNECTIONS

Front view

Rear view

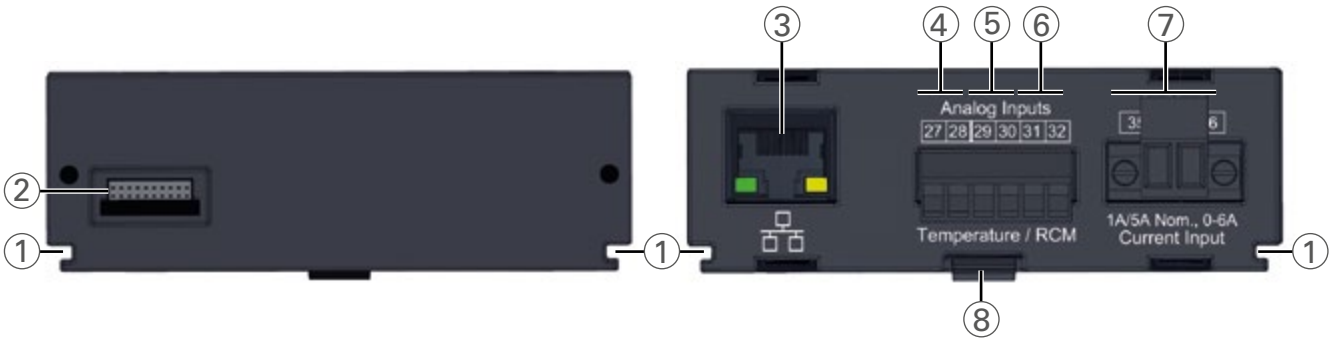

NO.	DESIGNATION	DESCRIPTION
1	Groove	Guide groove for the mounting/dismantling of the module
2	Module connector	Interface to basic device
3	RJ45	Only module 96-RCM-E: Ethernet interface (10/100Base-T)
4	Analog inputs - terminals 27 / 28	Temperature measurement
5	Analog inputs - terminals 29 / 30	Residual current measurement I5
6	Analog inputs - terminals 31 / 32	Residual current measurement I6 or voltage measurement U6 for the DC power
7	Current measurement input - terminals 35 / 36	Current measurement I4
8	Snapping mechanism	For mounting / removal of the module (snap in/snap out).

** With firmware version 3.00, the 96-PA-RCM-EL module is renamed the 96-RCM-E module.*

CONNECTION EXAMPLE

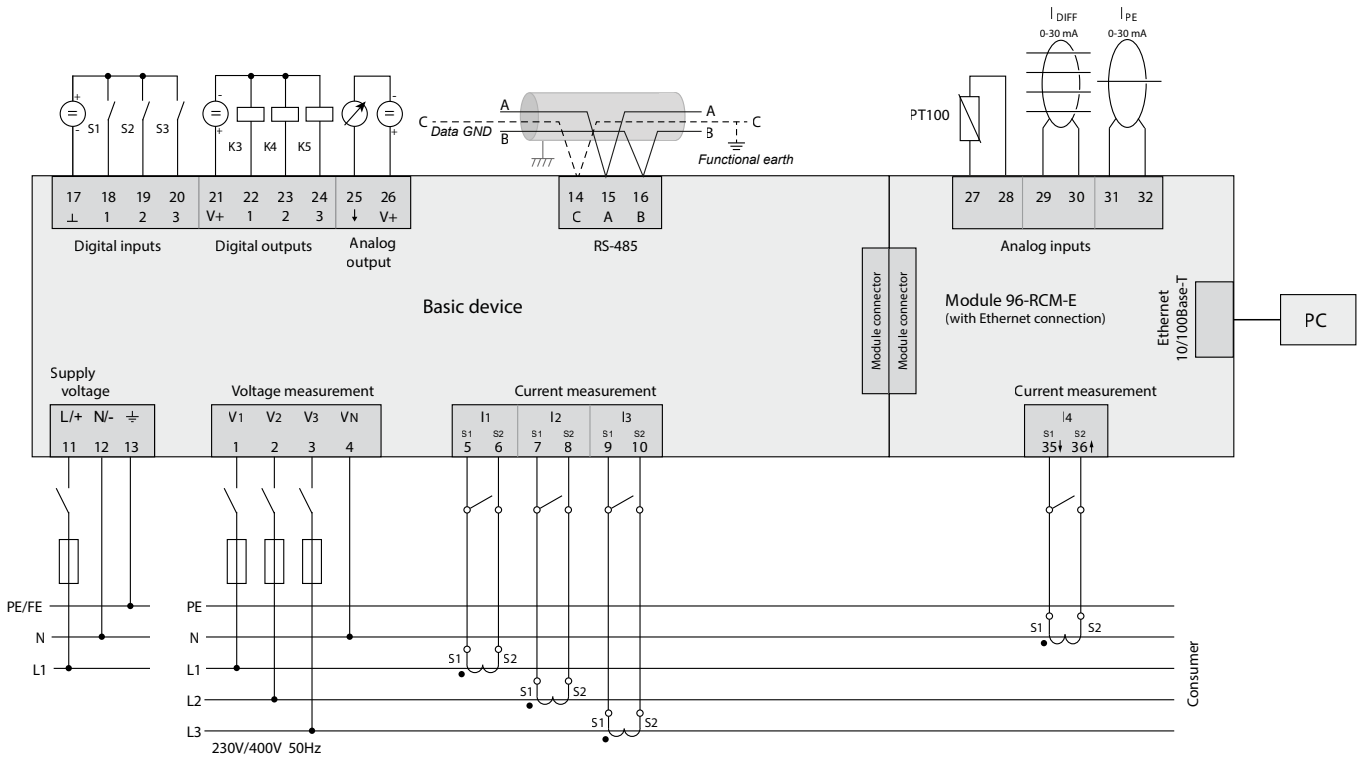

Fig.: Connection example "Basic device with module 96-RCM-E"
Information on overcurrent devices can be found in the user manual of your basic device

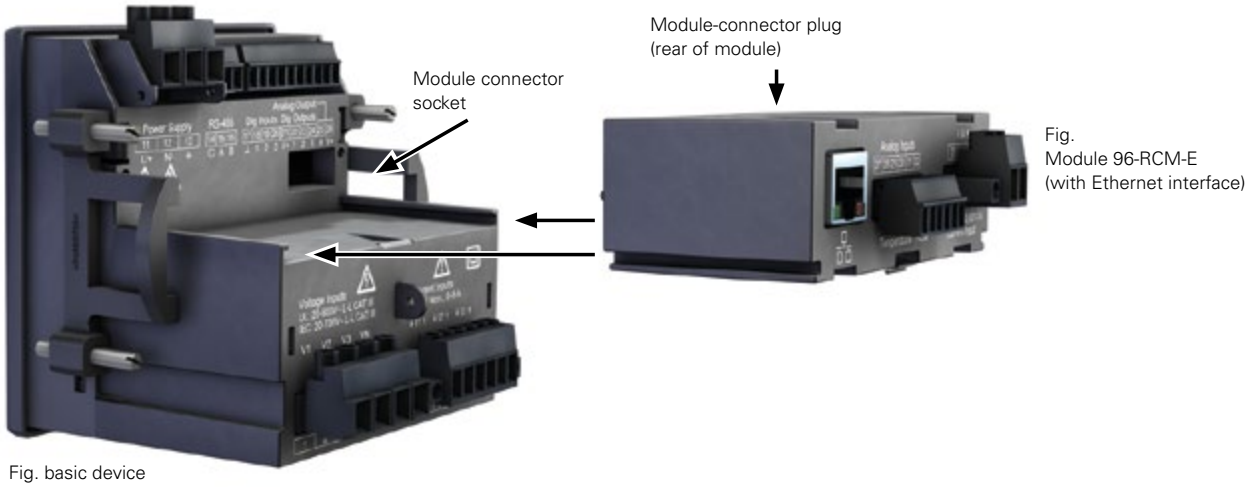

Fig.
Module 96-RCM-E
(with Ethernet interface)

Fig. basic device

TECHNICAL DATA

MODULE 96-RCM-E WITH ETHERNET CONNECTION	
ITEM NO.	**5232010**
GENERAL	
Net weight of module (with attached plug-in connectors)	78 g (0.17 lbs)
Impact resistance	IK07 according to IEC 62262
TRANSPORT AND STORAGE	
The following specifications apply for devices transported and stored in the original packaging.	
Free fall	1 m (39.37 in)
Temperature	K55 –25 °C to +70 °C (–13 °F to 158 °F)
Relative air humidity (non-condensing)	0 to 90 % RH
Environmental conditions during operation, see the usage information for your basic device.	
ANALOG INPUTS	
Differential or current signals	2x
Temperature measurement	1x
RESIDUAL CURRENT INPUT	
Nominal current	30 mA_{rms} | 0 to 20 mA | 4 to 20 mA
Measuring range	0 to 30 mA_{rms}
Operating current	50 µA
Resolution	1 µA
Cable break detection (failure monitoring)	Can be activated
Crest factor	1.414 (relative to 30 mA)
Load	4 Ω
Overload for 1 s	1 A
Constant overloaded	200 mA
Measurement of residual currents	According to IEC/TR 60755 (2008-01): Type A Type B and B+[1)]
1) B+ means extended frequency range, residual current transformers of the B+ type required.	
TEMPERATURE MEASUREMENT	
Update time	200 ms
Suitable thermal sensor	PT100, PT1000, KTY83, KTY84
Total burden (thermal sensor and lead)	max. 4 kΩ

THERMAL SENSOR TYPE	TEMPERATURE RANGE	RESISTANCE RANGE	MEASUREMENT UNCERTAINTY
PT100	–99 °C (–146.2 °F) to +500 °C (932 °F)	60 Ω to 180 Ω	±1.5 % rng
PT1000	–99 °C (–146.2 °F) to +500 °C (932 °F)	600 Ω to 1.8 kΩ	±1.5 % rng
KTY83	–55 °C (–67 °F) to +175 °C (347 °F)	500 Ω to 2.6 kΩ	±1.5 % rng
KTY84	–40 °C (–40 °F) to +300 °C (572 °F)	350 Ω to 2.6 kΩ	±1.5 % rng

96-PTS-60 Module

MODULAR EXPANSION FOR THE UMG 96-PA METER

Module 96-PTS-60

- Buffers the operating voltage in the event of a power failure



MODULE 96-PTS-60 – DIMENSIONED DRAWING

All dimensions in mm

Top view

Side view

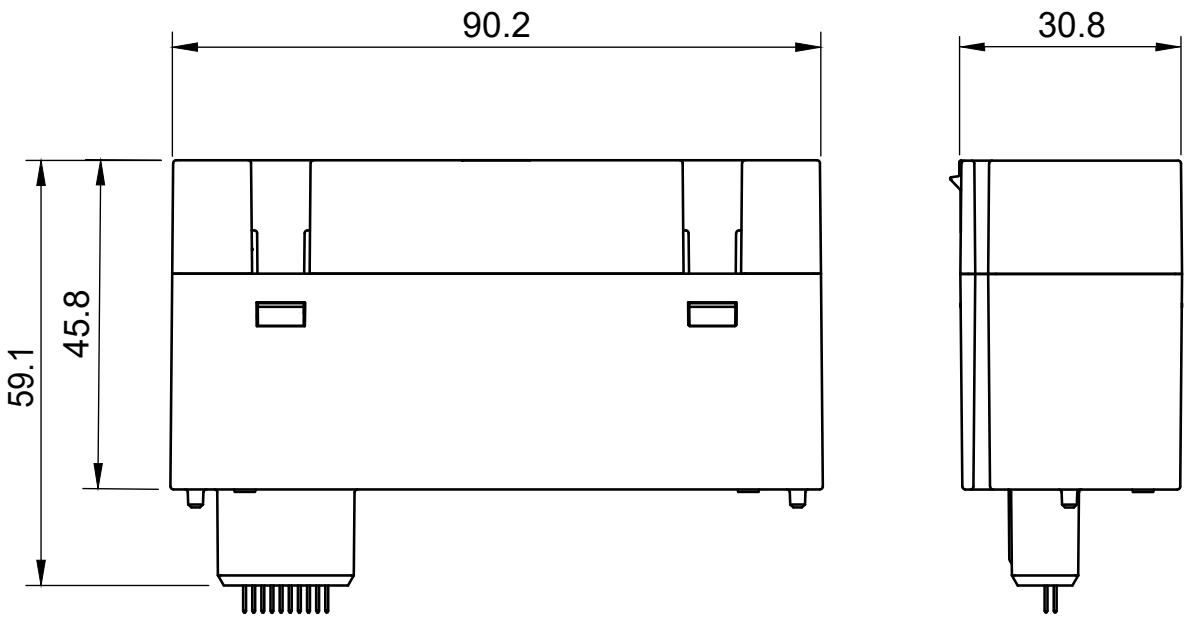

CONNECTION EXAMPLE

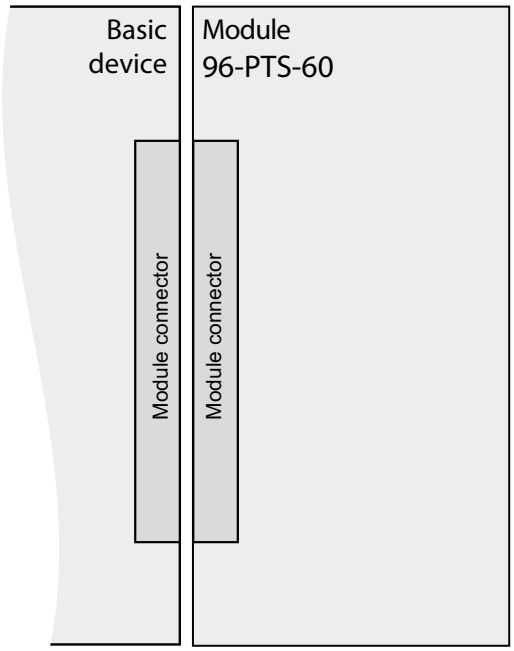

Fig.: Connection example "Basic device with module 96-PTS-60"

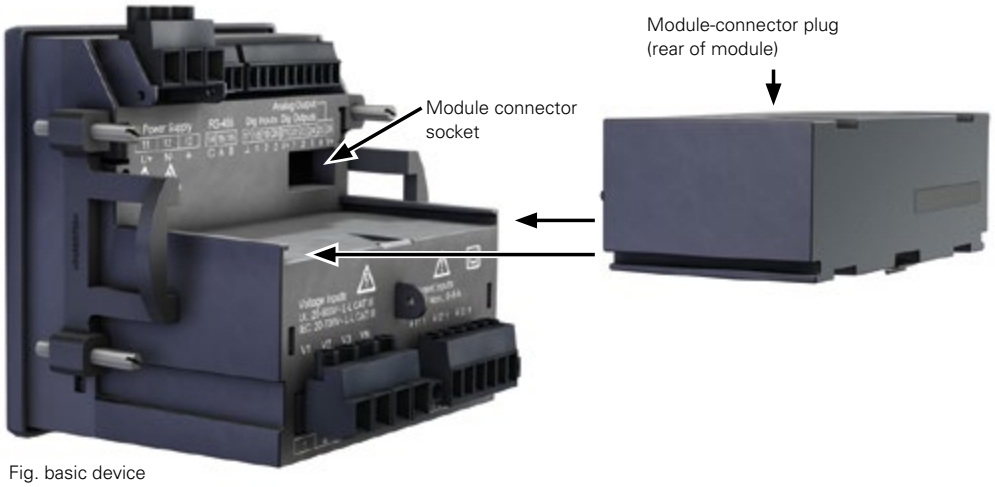

Fig. basic device

Fig.
Module 96-PTS-60

TECHNICAL DATA

MODUL 96-PTS-60	
ITEM NO.	**5232015**
GENERAL	
Net weight	approx. 76 g (0.17 lb)
Package weight (incl. accessories)	approx. 260 g (0.57 lb)
Device dimensions (W x H x D)	approx. 90.2 mm x 30.8 mm x 59.1 mm/45.8 mm (3,55 in x 1.21 in x 2.33 in / 1.8 in)
Device compatibility with	PA series, PQ-L series
Energy in buffer mode (typical)	65 J
Charging	Charging time, approx. 2.5 hrs.
ENVIRONMENTAL CONDITIONS	
Operating temperature	–25 °C to +70 °C (–13 °F to +158 °F)
Storage temperature	–25 °C to +70 °C (–13 °F to +158 °F)
Rel. Humidity	≤ 75 % non-condensing
IP protection class	Front: IP40 Rear: IP20
Pollution degree	2
Service life at 40 °C	approx. 15 years

At the end of the service life, a discharge time of typically at least 60 seconds is still ensured at 50 % backlight brightness.

DURATION OF POWER SUPPLY	
At a display brightness of 100 %	approx. 90 s
At a display brightness of 20 %	approx. 180 s

From firmware 3.44: If the supply of power is interrupted, the display brightness is automatically reduced to 20 %.
A power supply duration of approx. 180 s is ensured.

MAINS OPERATION	
Max. own consumption	600 mW
Average own consumption in idle mode	60 mW

UMG 96RM-E

MULTIFUNCTIONAL POWER ANALYZER

(WITH ETHERNET AND RCM)

RESIDUAL CURRENT MONITORING

- Continuous monitoring of residual currents
- Alternative for insulation measurement in TN-S systems

INTERFACES

- RS-485
- Ethernet

POWER QUALITY

- Harmonics up to the 40th harmonic
- Rotating field components
- Distortion factor THD-U/THD-I

COMMUNICATION

- Modbus RTU, TCP, Gateway
- TCP/IP
- HTTP
- FTP
- SNMP
- NTP time synchronization
- SMTP
- DHCP
- SNTP
- TFTP
- BACnet (optional)

MEASURING ACCURACY

- Class 0.5S
- Current 0.2 %
- Voltage 0.2 %

MEASUREMENT DATA MEMORY

- 256 MB/partition A: approx. 106 months, partition B: approx. 26 months (according to factory setting)

PERIPHERALS

- 2 digital outputs
- 2 analog inputs
- 3 digital inputs or outputs (selectable)
- Temperature measurement input

UMG 96RM-E



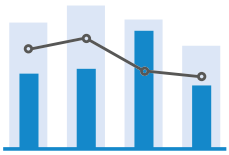

ENERGY MANAGEMENT

Extensive energy measurement data, high accuracy: 0.5S active energy

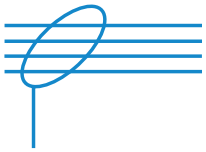

RCM

Integrated residual current measurement with dynamic limit value definition

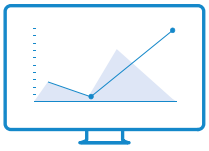

DISPLAY

Simple 2-button operation, LED backlight

DIMENSIONED DRAWING

All dimensions in mm

Side view

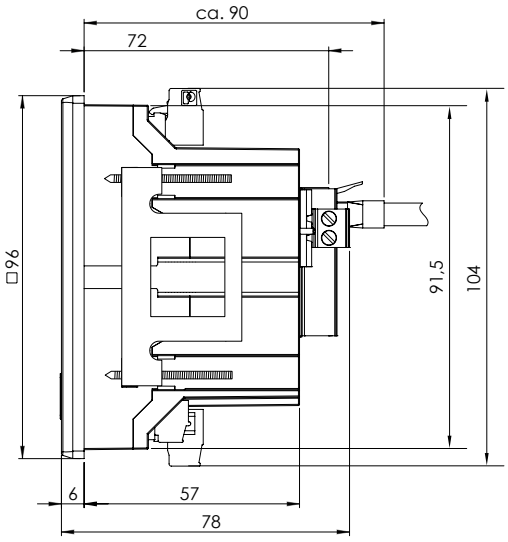

Rear view

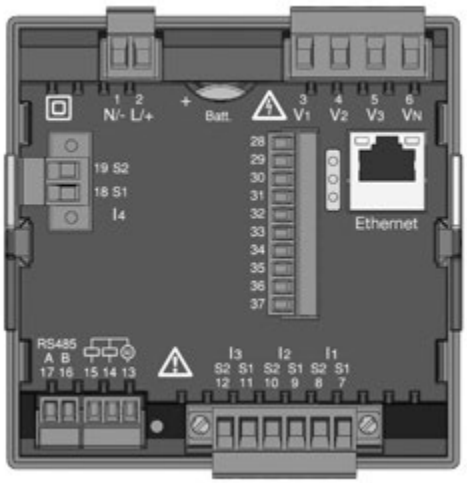

Cutout dimensions: $92^{+0.8}$ x $92^{+0.8}$ mm

CONNECTION EXAMPLE

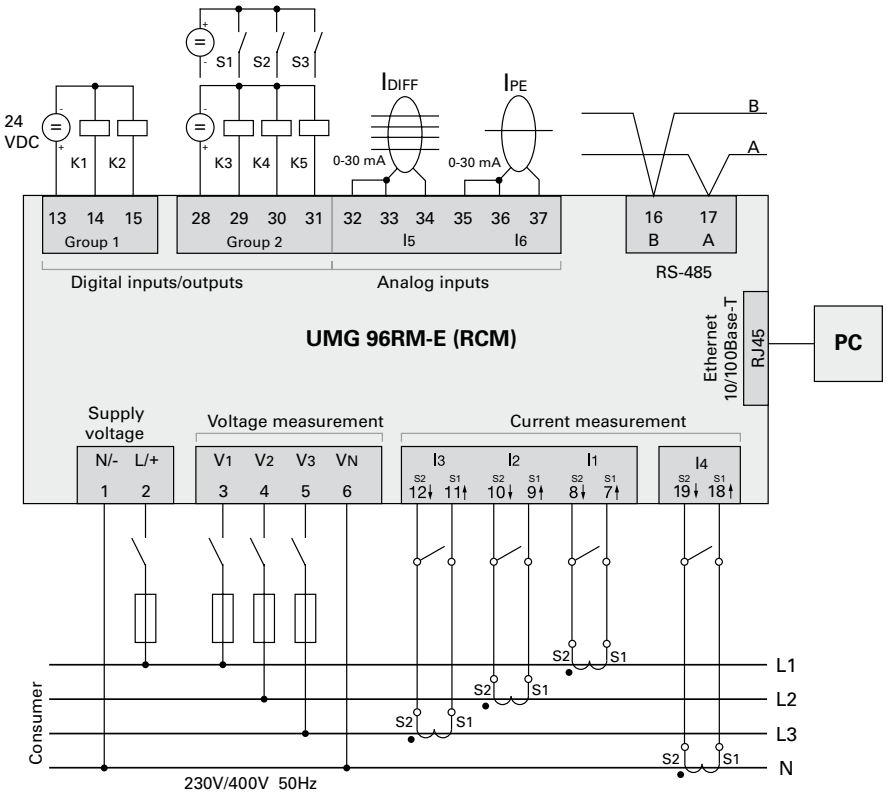

Fig.: Connection example with temperature and residual current measurement

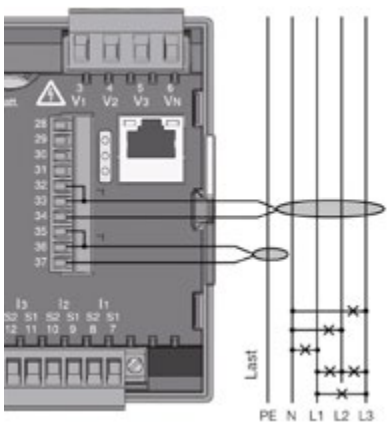

Fig.: Connection example for residual current measurement and PE monitoring

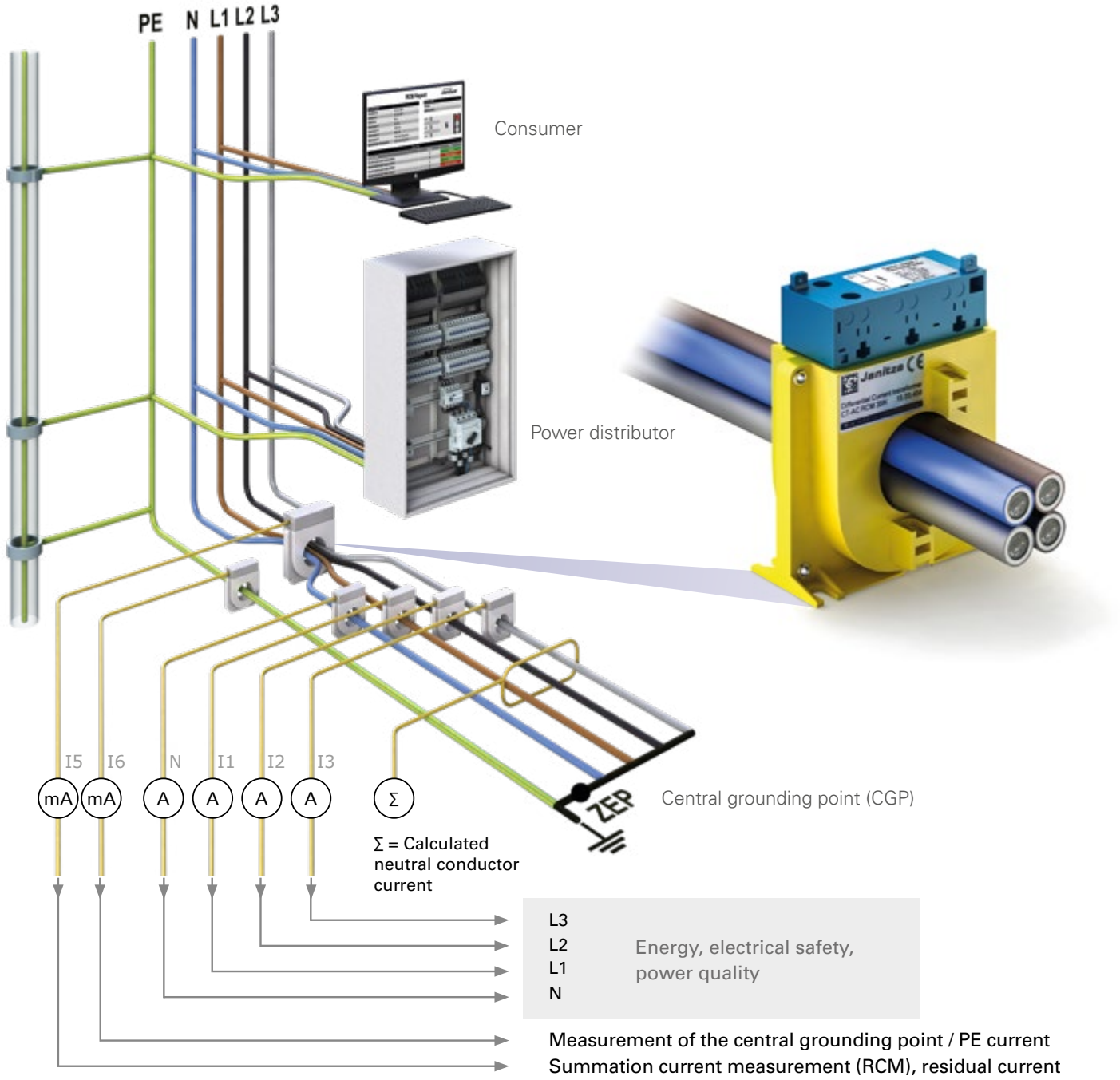

Residual and operating current monitoring: Can be implemented with the UMG 512-PRO / UMG 509-PRO / UMG 96RM-E and UMG 96-PA network analyzers (with RCM module). The RCM device used should be easy to handle, automatically point out problems and at the same time provide valuable assistance to the service technician.

TECHNICAL DATA

	UMG 96RM-E
ITEM NO. (90–277 VAC / 90–250 VDC)	**5222062**
ITEM NO. (24–90 VAC / 24–90 VDC)	**5222063**
BACNET COMMUNICATION	**5222081**

GENERAL

Net weight (with attached connectors)	approx. 370 g
Package weight (incl. accessories)	approx. 950 g
Battery	Lithium battery CR2032, 3 V (approval i.a.w. UL 1642)
Backlight service life	40000 h (after this period of time the background lighting efficiency will reduce by approx. 50 %)

TRANSPORT AND STORAGE

The following information applies to devices that are transported or stored in their original packaging.

Free fall	1 m
Temperature	K55 (–25 °C to +70 °C)
Relative humidity	0 to 90 % RH

AMBIENT CONDITIONS DURING OPERATION

The UMG 96RM is intended for weather-protected, stationary use. Protection class II according to IEC 60536 (VDE 0106, Part 1).	
Operating temperature range	K55 (–10 °C to +55 °C)
Relative humidity	0 to 75 % RH
Operating altitude	0 to 2000 m above sea level
Degree of polution	2
Mounting position	vertical
Ventilation	forced ventilation is not required
Protection against ingress of solid foreign bodies and water – Front side – Rear side – Front with seal	 IP40 i.a.w. EN60529 IP20 i.a.w. EN60529 IP54 i.a.w. EN60529

POWER SUPPLY VOLTAGE

Option 230 V Nominal range Power consumption	 AC 90 V–277 V (50/60 Hz) or DC 90 V–250 V; 300 V CAT III max. 7.5 VA / 4 W
Option 24 V Nominal range Power consumption	 24 V–90 V AC / DC; 150 V CAT III max. 7.5 VA / 5 W
Operating range	±10 % of nominal range
Internal fuse, not replaceable	Type T1A / 250 V/277 V according to IEC 60127
Recommended overcurrent protection device for line protection (certified under UL)	Option 230 V: 6–16 A Option 24 V: 1–6 A (Char. B)

Recommendation for the maximum number of devices on a line circuit breaker:
Option 230 V: Line circuit breaker B6A: max. 4 devices / line circuit breaker B16A: max. 11 devices
Option 24 V: Line circuit breaker B6A: max. 3 devices / line circuit breaker B16A: max. 9 devices

DIGITAL OUTPUTS

2 and 3 optional outputs, semiconductor relay, not short-circuit proof.

Switching voltage	max. 33 VAC, 60 VDC
Switching current	max. 50 mA_{eff} AC/DC
Response time	10/12 periods + 10 ms*
Pulse output (energy pulse)	max. 50 Hz

** Response time e.g. at 50 Hz: 200 ms + 10 ms = 210 ms*

DIGITAL INPUTS
3 optional digital inputs, semiconductor relays, not short-circuit proof.

Maximum counter frequency	20 Hz
Input signal present	18 V to 28 V DC (typically 4 mA)
Input signal not present	0 to 5 V DC, current less than 0.5 mA

TEMPERATURE MEASUREMENT INPUT
2 optional inputs

Update time	1 second
Connectable sensors	PT100, PT1000, KTY83, KTY84
Total burden (sensor and cable)	max. 4 kΩ

SENSOR TYPE	TEMPERATURE RANGE	RESISTANCE RANGE	MEASUREMENT UNCERTAINTY
KTY83	–55° C to +175° C (–67 °F to 347 °F)	500 Ohm to 2.6 kOhm	±1.5 % rng
KTY84	–40° C to +300° C (–40 °F to 572 °F)	350 Ohm to 2.6 kOhm	±1.5 % rng
PT100	–99° C to +500° C (–146.2 °F to 932 °F)	60 Ohm to 180 Ohm	±1.5 % rng
PT1000	–99° C to +500° C (–146.2 °F to 932 °F)	600 Ohm to 1.8 kOhm	±1.5 % rng

CABLE LENGTH (DIGITAL INPUTS/OUTPUTS, TEMPERATURE MEASUREMENT INPUT)

Up to 30 m	Unshielded
Greater than 30 m	Shielded

SERIAL INTERFACE

RS-485 – Modbus RTU/Slave	9.6 kbps, 19.2 kbps, 38.4 kbps, 57.6 kbps, 115.2 kbps
Stripping length	7 mm

MEASURING VOLTAGE

Three-phase 4-conductor systems with nominal voltages up to	277 V/480 V (±10 %)
Three-phase 3-conductor systems, non-grounded, with rated voltages up to	IT 480 V (±10 %)
Overvoltage category	300 V CAT III
Measurement surge voltage	4 kV
Measurement range L-N	0[1] to 300 V_{rms} (max. surge voltage 520 V_{rms})
Measurement range L-L	0[1] to 520 V_{rms} (max. surge voltage 900 V_{rms})
Resolution	0.01 V
Crest factor	2.45 (related to the measurement range)
Impedance	3 MΩ/phase
Power consumption	approx. 0.1 VA
Sampling frequency	21.33 kHz (50 Hz), 25.6 kHz (60 Hz) per measurement channel
Frequency range of basic oscillation – Resolution	45 Hz to 65 Hz 0.01 Hz

1) The UMG 96RM-E can only detect measurements when a voltage L1-N greater than 20 V_{eff} (4-wire measurement) at voltage input V1 or a voltage L1-L2 greater than 34 V_{eff} (3-wire measurement) is applied.

CURRENT MEASUREMENTS I1 – I4

Rated current	5 A
Measurement range	0 to 6 Arms
Crest factor	1.98
Resolution	0.1 mA (display 0.01 A)
Overvoltage category	300 V CAT II
Measurement surge voltage	2 kV
Power consumption	approx. 0.2 VA (Ri = 5 mΩ)
Overload for 1 s	120 A (sinusoidal)
Sampling frequency	20 kHz

RESIDUAL CURRENT MEASUREMENT I5 / I6

Rated current	30 mA_{rms}
Measurement range	0 to 40 mA_{rms}
Operating current	50 µA
Resolution	1 µA
Crest factor	1.414 (relative to 40 mA)
Burden	4 Ohm
Overload for 1 sec.	5 A
Sustained overload	1 A
Overload 20 ms	50 A
Residual current measurement	i.a.w. IEC/TR 60755 (2008-01): Type A  Type B 

ETHERNET CONNECTION

Connection	RJ45
Functions	Modbus gateway, embedded web server (HTTP)
Protocols	TCP/IP, DHCP-Client (BootP), Modbus/TCP (Port 502), ICMP (Ping), NTP, Modbus RTU over Ethernet (Port 8000), FTP, SNMP

TERMINAL CONNECTION CAPACITY (POWER SUPPLY VOLTAGE)

Conductors to be connected. Only one conductor can be connected per terminal!

Single core, multi-core, fine-stranded	0.2–2.5 mm^2, AWG 26-12
Terminal pins, wire ferrules	0.2–2.5 mm^2
Tightening torque	0.4–0.5 Nm
Stripping length	7 mm

TERMINAL CONNECTION CAPACITY (VOLTAGE AND CURRENT MEASUREMENT)

Conductors to be connected. Only one conductor can be connected per terminal!

	Current	**Voltage**
Single core, multi-core, fine-stranded	0.2–2.5 mm^2, AWG 26-12	0.08–4.0 mm^2, AWG 28-12
Terminal pins, core end sheath	0.2–2.5 mm^2	0.2–2.5 mm^2
Tightening torque	0.4–0.5 Nm	0.4–0.5 Nm
Stripping length	7 mm	7 mm

TERMINAL CONNECTION CAPACITY

(Residual current or temperature measurement inputs and digital inputs/outputs)

Rigid/flexible	0.14–1.5 mm^2, AWG 28-16
Flexible with core end sheath without plastic sleeve	0.20–1.5 mm^2
Flexible with core end sheath with plastic sleeve	0.20–1.5 mm^2
Tightening torque	0.20–0.25 Nm
Stripping length	7 mm

TERMINAL CONNECTION CAPACITY: SERIAL INTERFACE

Single core, multi-core, fine-stranded	0.20–1.5 mm^2
Terminal pins, core end sheath	0.20–1.5 mm^2
Tightening torque	0.20–0.25 Nm
Stripping length	7 mm

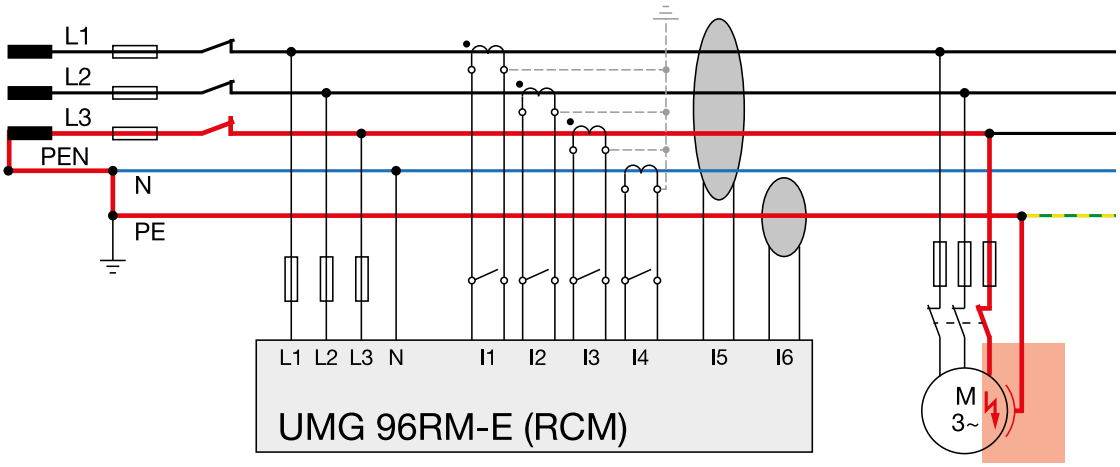

Fig.: UMG 96RM-E with residual current monitoring via measuring inputs I5 / I6

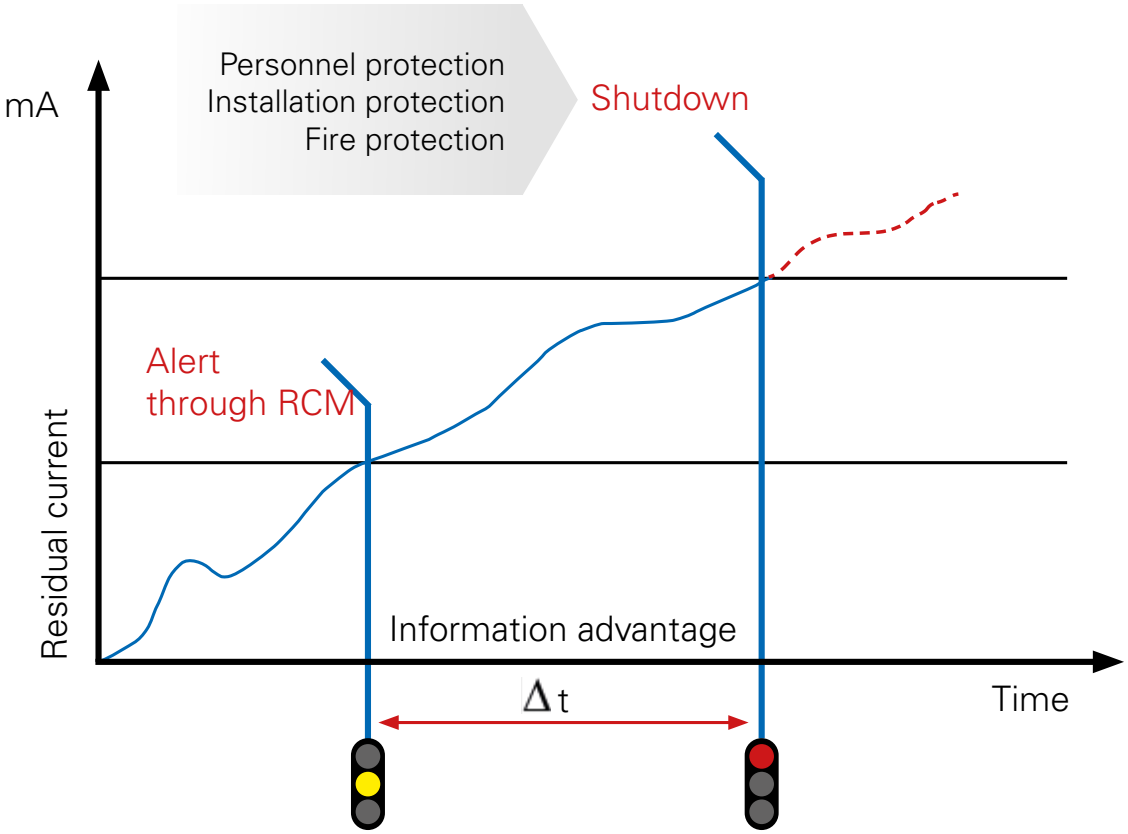

Fig.: Alert before switching off – An objective of residual current monitoring

MODULARLY EXPANDABLE NETWORK ANALYZER



POWER QUALITY
- Harmonics up to the 65th harmonic
- Distortion factor THD-U/THD-I
- Sampling frequency: 13.67 kHz
- Full-wave events
- Analysis option on the display
- Directional drag indicator
- 20 ms RMS value memory

MODULARITY
- Temperature measurement with monitoring via integrated comparator
- Ethernet interface with Modbus TCP and gateway function
- 2 residual current inputs
- Neutral conductor measurement (I4 – current measurement)

INTERFACES
- RS-485

COMMUNICATION
- Modbus RTU

MEASUREMENT DATA MEMORY
- 64 MB/partition A: approx. 45 months, partition B: approx. 20 months (according to factory setting)

MEASURING ACCURACY
- Class 0,2S/Current 0,2 % (UMG 96-PQ-L)
- Class 0,5S/Current 0,5 % (UMG 96-PQ-L-LP)
- Voltage: 0,2 %

PERIPHERALS
- 3 digital inputs and outputs
- 1 analog output

COLOR GRAPHIC DISPLAY
- 6-button operation
- Measured values numerically, as diagram or graph
- Intuitive operation

SOFTWARE ACTIVATION
- According to IEC 61000-4-30 Class S
- Recording according to EN 50160
- Flicker
- Fast voltage change
- Interharmonics

UMG 96-PQ-L Series



OPERATING CONVENIENCE

Clear presentation of all relevant measured values on the display

POWER QUALITY

Threshold monitoring and measurement up to the 65th harmonic

MODULAR

Future-proof thanks to retrofittable modules and firmware packages

DIMENSIONED DRAWING

All dimensions in mm

Side view

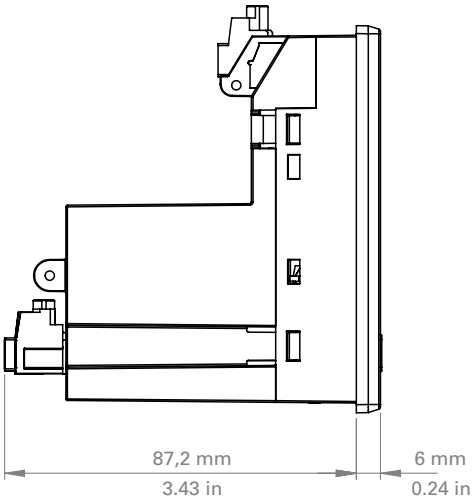

Bottom view

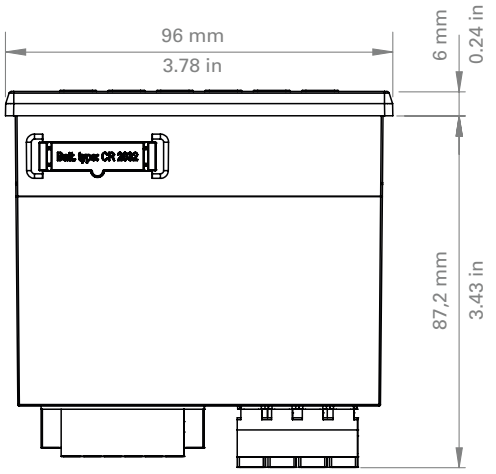

Cutout dimensions: $92^{+0.8}$ x $92^{+0.8}$ mm

CONNECTION EXAMPLE

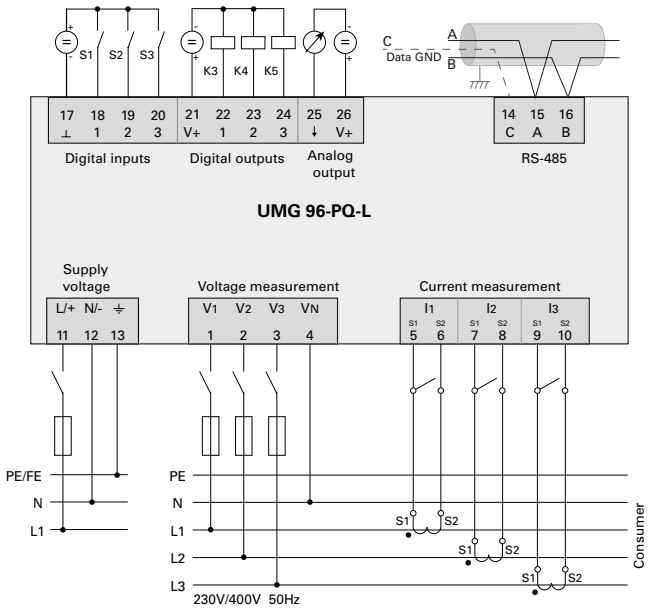

1) UL/IEC approved overcurrent protective device
2) UL/IEC approved overcurrent protective device
3) Short circuit bridges (external)

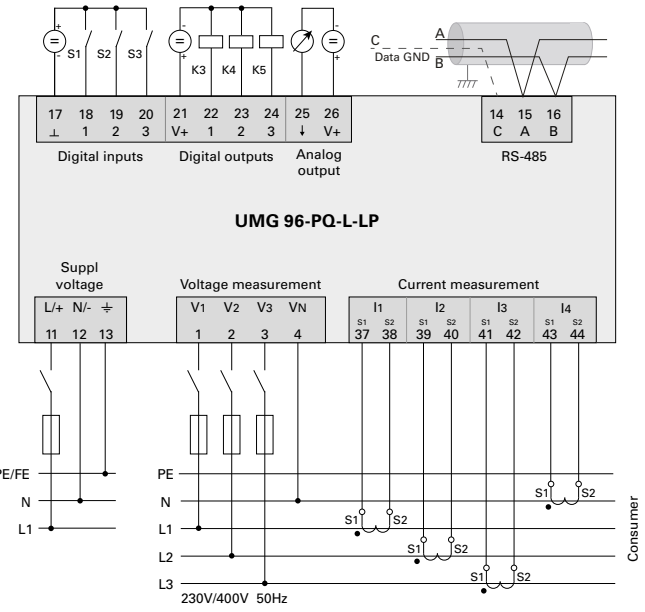

1) UL/IEC approved overcurrent protective device
2) UL/IEC approved overcurrent protective device

TECHNICAL DATA

UMG 96-PQ-L	SUPPLY VOLTAGE	NETWORK CONFIGURATION	IEC 61000-4-30	ITEM NO.
UMG 96-PQ-L	90–277 VAC / 90–250 VDC	TN- AND TT	*	5236001
UMG 96-PQ-L	24–90 VAC / 24–90 VDC	TN- AND TT	*	5236002
UMG 96-PQ-L	90–277 VAC / 90–250 VDC	TN-, TT- AND IT	*	5236005
UMG 96-PQ-L-LP	90–277 VAC / 90–250 VDC	TN- AND TT-	*	5236006
UMG 96-PQ-L-LP	24–90 V AC / 24–90 V DC	TN- AND TT-	*	5236007
UMG 96-PQ-L	90–277 VAC / 90–250 VDC	TN- AND TT	CLASS S	5236021
UMG 96-PQ-L	24–90 VAC / 24–90 VDC	TN- AND TT	CLASS S	5236022
UMG 96-PQ-L	90–277 VAC / 90–250 VDC	TN-, TT- AND IT	CLASS S	5236025
UMG 96-PQ-L-LP	90–277 V AC / 90–250 V DC	TN- AND TT-	–	5236026
UMG 96-PQ-L-LP	24–90 V AC / 24–90 V DC	TN- AND TT-	–	5236027
* SOFTWARE ACTIVATION (ON IEC 61000-4-30 CLASS S) FOR ITEM NO. 5236001, 5236002, 5236005, 5236006, 5236007				5236020
BASIC PACKAGE GridVis® EDITION EXPERT				5100699

A single GridVis® Expert item package can be purchased for this product (item no.: 5100699). This package contains 1 item with an update period of one year. You can extend this at any time for a further year (item no.: 5100739).

GENERAL

Net weight (with attached plug-in connectors)	approx. 250 g (0.55 lbs)
Package weight (incl. accessories)	approx. 500 g (1.1 lbs)
Battery	Type Lithium CR2032, 3 V, (UL 1642 approved)
Data memory	64 MB
Backlight service life	40000 h (backlight reduces to approx. 50 % over this period)
Impact resistance	IK07 according to IEC 62262

TRANSPORT AND STORAGE

The following information applies to devices that are transported or stored in their original packaging.

Free fall	1 m (39.37 in)
Temperature	–25 °C to +70 °C (–13 °F to 158 °F)
Relative air humidity (non-condensing)	0 to 90 % RH

ENVIRONMENTAL CONDITIONS DURING OPERATION

Install the device in a weather-protected and stationary location. Protection class II according to IEC 60536 (VDE 0106, Part 1).	
Rated temperature range	–10 °C +55 °C (14 °F to 131 °F)
Relative air humidity (non-condensing)	0 to 75 % RH
Operating elevation	0 to 2000 m (6562 ft) above sea level
Pollution degree	2
Mounting orientation	As desired
Ventilation	No forced ventilation required
Protection against foreign matter and water – Front – Rear – Front with seal	 IP40 according to EN60529 IP20 according to EN60529 IP54 according to EN60529

SUPPLY VOLTAGE

Option 230 V: Nominal range Power consumption	 AC 90 V–277 V (50/60 Hz) or DC 90 V–250 V, 300 V CAT III max. 4.5 VA / 2 W
Option 24 V: Nominal range Power consumption	 AC 24 V–90 V (50/60Hz) or DC 24 V–90 V, 150 V CAT III max. 4.5 VA / 2 W
Operating range	±10 % of nominal range
Internal fuse, not replaceable	Type T1A / 250 V DC / 277 V AC according to IEC 60127
Recommended overcurrent protective device for the line protection (UL approval)	Option 230 V: 6–16 A (Char. B) Option 24 V: 1–6 A (Char. B)

VOLTAGE MEASUREMENT	
Three-phase 4-conductor systems with rated voltages up to	417 V / 720 V (±10 %) according to IEC; 347 V / 600 V (±10 %) according to UL
Three-phase 3-conductor systems with rated voltages up to	600 V (±10 %)
Single-phase 2-conductor system with rated voltages up to	480 V (±10 %)
Overvoltage category	600 V CAT III, 300 V CAT IV
Rated surge voltage	6 kV
Protection of the voltage measurement	1–10 A tripping characteristic B (with IEC/UL approval)
Measuring range L-N	0[1)] to 600 V_{rms} (max. overvoltage 800 V_{rms})
Measuring range L-L	0[1)] to 1040 V_{rms} (max. overvoltage 1350 V_{rms})
Resolution	0.01 V
Crest factor	2.45 (related to the measuring range)
Impedance	3 MΩ/phase
Power consumption	approx. 0.1 VA
Sampling frequency	13.67 kHz
Sampling frequency (IT variant)	13.98 kHz
Frequency of the fundamental oscillation – Resolution	45 Hz to 65 Hz – 0.01 Hz
Fourier analysis	1st–65th harmonics

1) The device only determines measured values if a voltage L1-N of greater than 20 V_{eff} (4-conductor measurement) or a voltage L1-L2 of greater than 34 V_{eff} (3-conductor measurement) is applied to voltage measurement input V1.

CURRENT MEASUREMENT	UMG 96-PQ-L-LP
Measuring range: Setting: Low-power (LP current transformers, active Rogowski coils) Setting: Rogowski coils (passive Rogowski coils)	 0.3 to 400 mV RMS 1 to 800 mV RMS
Channels	4
Input impedance per channe	47 kΩ
Crest factor	2
Overload for 1 second	3 V
Resolution	0.1 V
Sampling frequency	13.67 kHz
Fourier analysis	1st–65th Harmonics (I1 ... U3) / 1st–40th Harmonice (I4)

CURRENT MEASUREMENT	UMG 96-PQ-L
Nominal current	5 A
Measuring range	0,005 to 6 A_{rms}
Crest factor	2 (relative to 6 A_{rms})
Overvoltage category	300 V CAT II
Rated surge voltage	2 kV
Power consumption	approx. 0,2 VA (Ri = 5 mΩ)
Overload for 1 s	60 A (sinusoidal)
Resolution	0,1 mA (display 0,01 A)
Sampling frequency	13,67 kHz
Sampling frequency (IT variant)	13,98 kHz
Fourier analysis	1st–65th Harmonics

SERIAL INTERFACE	
RS-485 – Modbus RTU/client device	9.6 kbps, 19.2 kbps, 38.4 kbps, 57.6 kbps, 115.2 kbps

DIGITAL OUTPUTS 3 digital outputs, solid state relays, not short-circuit proof.

Switching voltage	max. 33 V AC, 40 V DC
Switching current	max. 50 mA_{eff} AC/DC
Response time	approx. 200 ms
Pulse output	max. 50 Hz (energy pulses)

DIGITAL INPUTS 3 digital inputs, solid state relays, not short-circuit proof.

Maximum counter frequency	20 Hz
Input signal applied	18 V to 28 V DC (typically 4 mA)
Input signal not applied	0 to 5 V DC, current less than 0.5 mA

CABLE LENGTH (DIGITAL INPUTS/OUTPUTS)	
Up to 30 m (32.81 yd)	Unshielded
Greater than 30 m (32.81 yd)	Shielded

ANALOG OUTPUTS	
External power supply	max. 33 V
Current	0 to 20 mA
Update time	1 s
Load	max. 300 Ω
Resolution	10 bit

CONNECTION CAPACITY OF THE TERMINALS (SUPPLY VOLTAGE) Connectible conductors. Only connect one conductor per terminal!	
Single core, multi-core, fine-stranded	0.2–4.0 mm², AWG 28-12
Wire ferrules (non-insulated)	0.2–2.5 mm², AWG 26-14
Wire ferrules (insulated)	0.2–2.5 mm², AWG 26-14
Tightening torque	0.4–0.5 Nm (3.54–4.43 lbf in)
Strip length	7 mm (0.2756 in)

CONNECTION CAPACITY OF THE TERMINALS (VOLTAGE MEASUREMENT) Connectible conductors. Only connect one conductor per terminal!	
Single core, multi-core, fine-stranded	0.2–4.0 mm², AWG 28-12
Wire ferrules (non-insulated)	0.2–2.5 mm², AWG 26-14
Wire ferrules (insulated)	0.2–2.5 mm², AWG 26-14
Tightening torque	0.4–0.5 Nm (3.54–4.43 lbf in)
Strip length	7 mm (0.2756 in)

CONNECTION CAPACITY OF THE TERMINALS (LOW POWER CURRENT MEASUREMENT) Connectible conductors. Only connect one conductor per terminal!	UMG 96-PQ-L-LP
Single core, multi-core, fine-stranded	0.2–1.5 mm², AWG 28-16
Wire ferrules (non-insulated)	0.2–1.5 mm², AWG 26-16
Wire ferrules (insulated)	0.2–1.5 mm², AWG 26-16
Tightening torque	0.2–0.25 Nm (1.77–2.21 lbf in)
Strip length	7 mm (0.2756 in)

CONNECTING CAPACITY OF THE TERMINALS (CURRENT MEASUREMENT) Connectible conductors. Only connect one conductor per terminal!	UMG 96-PQ-L
Single core, multi-core, fine-stranded	0,2–4 mm², AWG 28-12
Wire ferrules (non-insulated)	0,2–2,5 mm², AWG 26-14
Wire ferrules (insulated)	0,2–2,5 mm², AWG 26-14
Tightening torque	0,4–0,5 Nm (3.54–4.43 lbf in)
Strip length	7 mm (0.2756 in)

CONNECTION CAPACITY OF THE TERMINALS (SERIAL INTERFACE) Connectible conductors. Only connect one conductor per terminal!	
Single core, multi-core, fine-stranded	0.2–1.5 mm², AWG 28-16
Wire ferrules (non-insulated)	0.2–1.5 mm², AWG 26-16
Wire ferrules (insulated)	0.2–1.5 mm², AWG 26-16
Tightening torque	0.2–0.25 Nm (1.77–2.21 lbf in)
Strip length	7 mm (0.2756 in)

CONNECTION CAPACITY OF THE TERMINALS (DIGITAL INPUTS/OUTPUTS, ANALOG OUTPUT) Connectible conductors. Only connect one conductor per terminal!	
Single core, multi-core, fine-stranded	0.2–1.5 mm², AWG 28-16
Wire ferrules (non-insulated)	0.2–1.5 mm², AWG 26-16
Wire ferrules (insulated)	0.2–1.5 mm², AWG 26-16
Tightening torque	0.2–0.25 Nm (1.77–2.21 lbf in)
Strip length	7 mm (0.2756 in)

96-RCM-E Module

MODULAR EXPANSION FOR THE UMG 96-PQ-L METER

Module 96-RCM-E*

- Ethernet interface
- 2 residual current inputs
- Temperature measurement
- 4th current input
- DC measurement



MODULE CONNECTIONS

Front view

Rear view

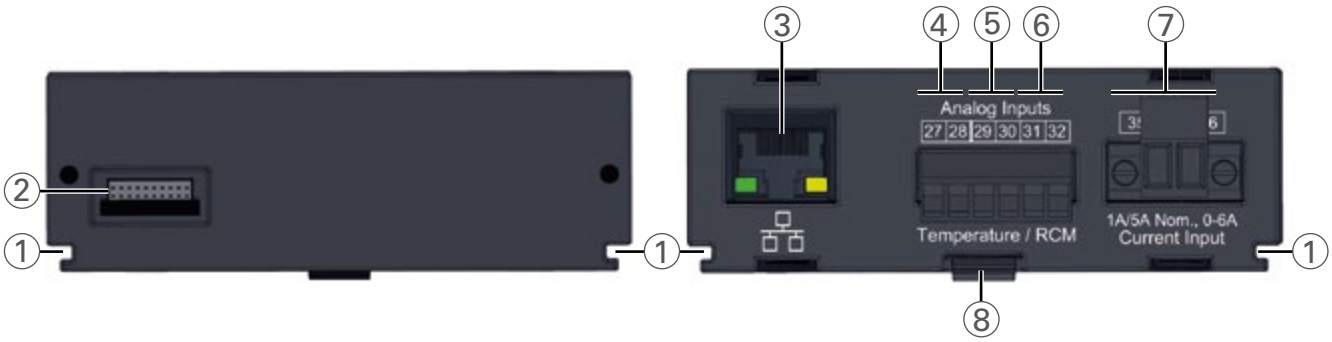

NO.	DESIGNATION	DESCRIPTION
1	Groove	Guide groove for the mounting/dismantling of the module
2	Module connector	Interface to basic device
3	RJ45	Only module 96-RCM-E: Ethernet interface (10/100Base-T)
4	Analog inputs - terminals 27/28	Temperature measurement
5	Analog inputs - terminals 29/30	Residual current measurement I5
6	Analog inputs - terminals 31/32	Residual current measurement I6 or voltage measurement U6 for the DC power
7	Current measurement input - terminals 35/36	Current measurement I4
8	Snapping mechanism	For mounting/removal of the module (snap in/snap out).

** With firmware version 3.00, the 96-PA-RCM-EL module is renamed the 96-RCM-E module.*

CONNECTION EXAMPLE

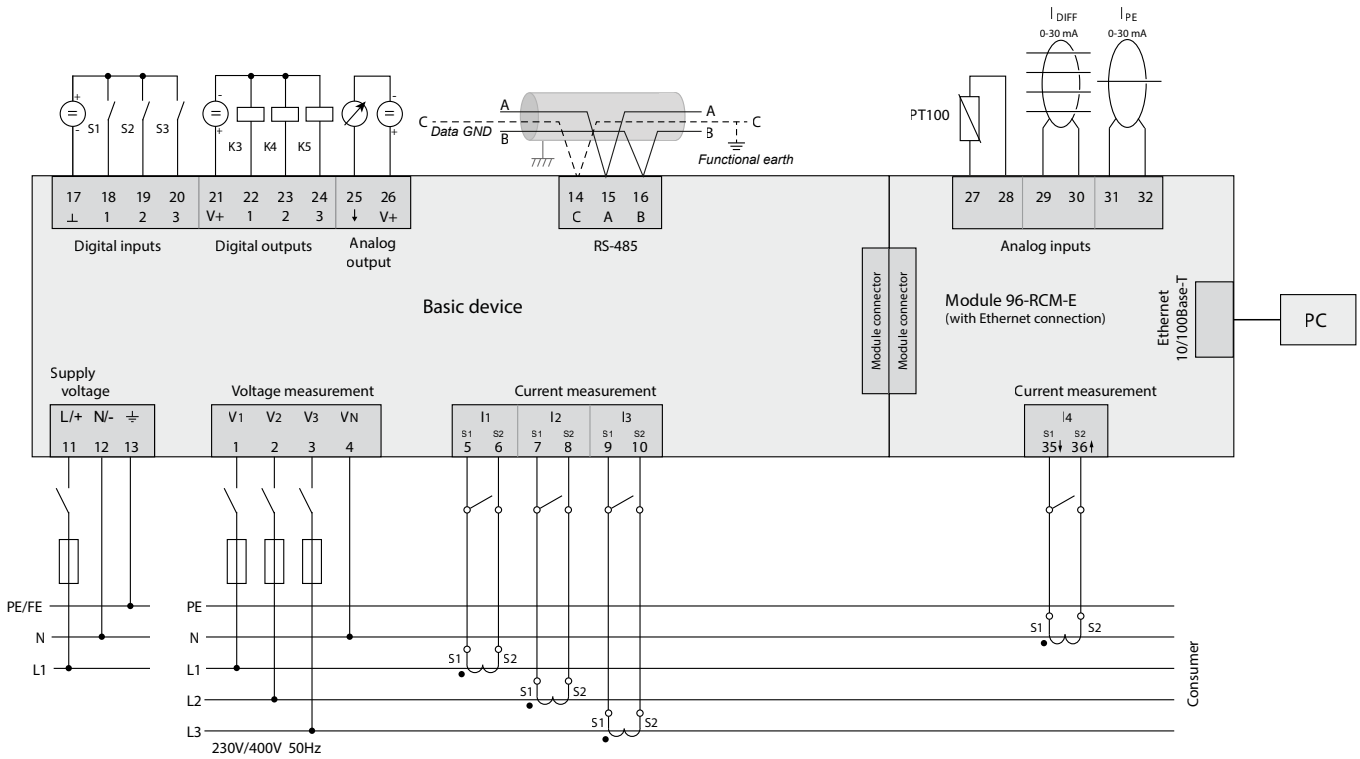

Fig.: Connection example "Basic device with module 96-RCM-E"
Information on overcurrent devices can be found in the user manual of your basic device

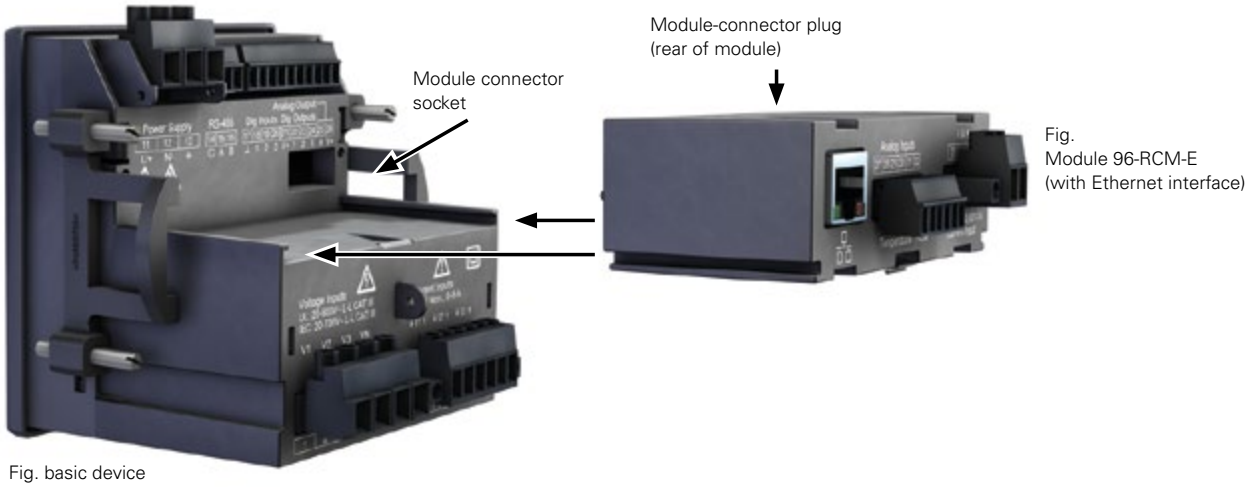

Fig.
Module 96-RCM-E
(with Ethernet interface)

Fig. basic device

TECHNICAL DATA

MODULE 96-RCM-E WITH ETHERNET CONNECTION	
ITEM NO.	**5232010**
GENERAL	
Net weight of module (with attached plug-in connectors)	78 g (0.17 lbs)
Impact resistance	IK07 according to IEC 62262
TRANSPORT AND STORAGE	
The following specifications apply for devices transported and stored in the original packaging.	
Free fall	1 m (39.37 in)
Temperature	K55 –25 °C to +70 °C (–13 °F to 158 °F)
Relative air humidity (non-condensing)	0 to 90 % RH
Environmental conditions during operation, see the usage information for your basic device.	
ANALOG INPUTS	
Differential or current signals	2x
Temperature measurement	1x
RESIDUAL CURRENT INPUT	
Nominal current	30 mA_{rms} | 0 to 20 mA | 4 to 20 mA
Measuring range	0 to 30 mA_{rms}
Operating current	50 µA
Resolution	1 µA
Cable break detection (failure monitoring)	Can be activated
Crest factor	1.414 (relative to 30 mA)
Load	4 Ω
Overload for 1 s	1 A
Constant overloaded	200 mA
Measurement of residual currents	According to IEC/TR 60755 (2008-01): Type A  Type B and B+[1)] 
1) B+ means extended frequency range, residual current transformers of the B+ type required.	
TEMPERATURE MEASUREMENT	
Update time	200 ms
Suitable thermal sensor	PT100, PT1000, KTY83, KTY84
Total burden (thermal sensor and lead)	max. 4 kΩ

THERMAL SENSOR TYPE	TEMPERATURE RANGE	RESISTANCE RANGE	MEASUREMENT UNCERTAINTY
PT100	–99 °C (–146.2 °F) to +500 °C (932 °F)	60 Ω to 180 Ω	±1.5 % rng
PT1000	–99 °C (–146.2 °F) to +500 °C (932 °F)	600 Ω to 1.8 kΩ	±1.5 % rng
KTY83	–55 °C (–67 °F) to +175 °C (347 °F)	500 Ω to 2.6 kΩ	±1.5 % rng
KTY84	–40 °C (–40 °F) to +300 °C (572 °F)	350 Ω to 2.6 kΩ	±1.5 % rng

96-PTS-60 Module

MODULAR EXPANSION FOR THE UMG 96-PQ-L METER

Module 96-PTS-60

- Buffers the operating voltage in the event of a power failure



MODULE 96-PTS-60 – DIMENSIONED DRAWING

All dimensions in mm

Top view

Side view

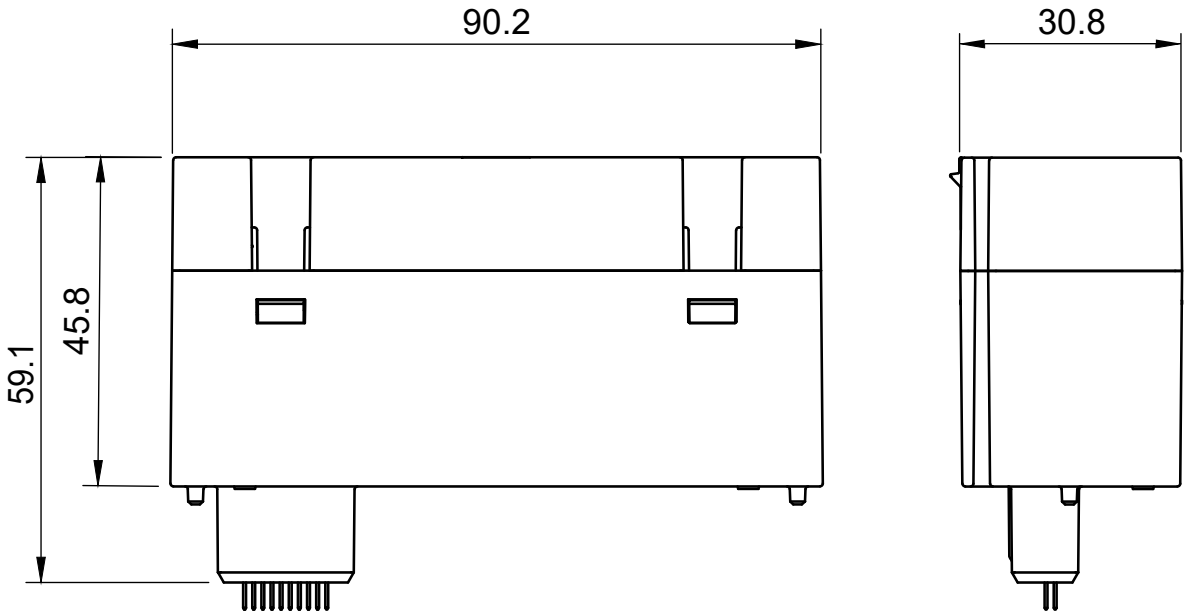

CONNECTION EXAMPLE

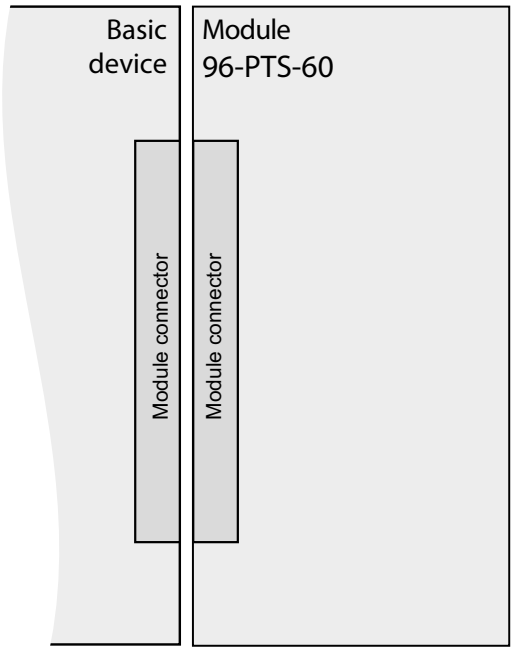

Fig.: Connection example "Basic device with module 96-PTS-60"

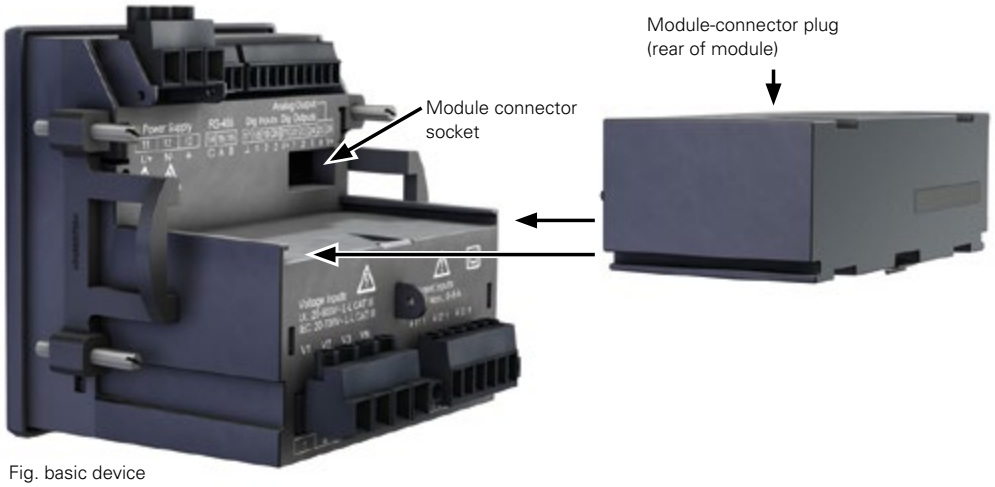

Fig. basic device

Fig.
Module 96-PTS-60

TECHNICAL DATA

MODUL 96-PTS-60	
ITEM NO.	**5232015**
GENERAL	
Net weight	approx. 76 g (0.17 lb)
Package weight (incl. accessories)	approx. 260 g (0.57 lb)
Device dimensions (W x H x D)	approx. 90.2 mm x 30.8 mm x 59.1 mm/45.8 mm (3,55 in x 1.21 in x 2.33 in / 1.8 in)
Device compatibility with	PA series, PQ-L series
Energy in buffer mode (typical)	65 J
Charging	Charging time, approx. 2.5 hrs.
ENVIRONMENTAL CONDITIONS	
Operating temperature	–25 °C to +70 °C (–13 °F to +158 °F)
Storage temperature	–25 °C to +70 °C (–13 °F to +158 °F)
Rel. Humidity	≤ 75 % non-condensing
IP protection class	Front: IP40 Rear: IP20
Pollution degree	2
Service life at 40 °C	approx. 15 years

At the end of the service life, a discharge time of typically at least 60 seconds is still ensured at 50 % backlight brightness.

DURATION OF POWER SUPPLY	
At a display brightness of 100 %	approx. 90 s
At a display brightness of 20 %	approx. 180 s

From firmware 3.44: If the supply of power is interrupted, the display brightness is automatically reduced to 20 %.
A power supply duration of approx. 180 s is ensured.

MAINS OPERATION	
Max. own consumption	600 mW
Average own consumption in idle mode	60 mW

UMG 509-PRO

MULTIFUNCTIONAL POWER QUALITY ANALYZER



MEASURING ACCURACY
- Class 0.2S
- Current: 0.2 %
- Voltage: 0.1 %

POWER QUALITY
- Harmonics current up to the 63rd harmonic
- Power quality analysis onboard
- Events and transients
- Unbalance

INTERFACES
- Ethernet
- Profibus (DSUB-9)
- RS-485 Modbus

RESIDUAL CURRENT MONITORING
- Continuous residual current measurement
- Ideal for CGP
- Definition of a digital input for an exceedance

PROGRAMMABLE
- PLC functionality
- Graphic programming
- Jasic®

ALARM MANAGEMENT
- Individual forwarding via different channels, e.g. digital outputs
- Programmable
- Watchdog APPs

MEASUREMENT DATA MEMORY
- 256 MB/approx. 95.95 months (according to factory setting)
- Memory range up to 2 years
- User-defined memory segmentation

PERIPHERALS
- Digital inputs and outputs e.g. pulse or logic input
- Temperature measurement input

UMG 509-PRO

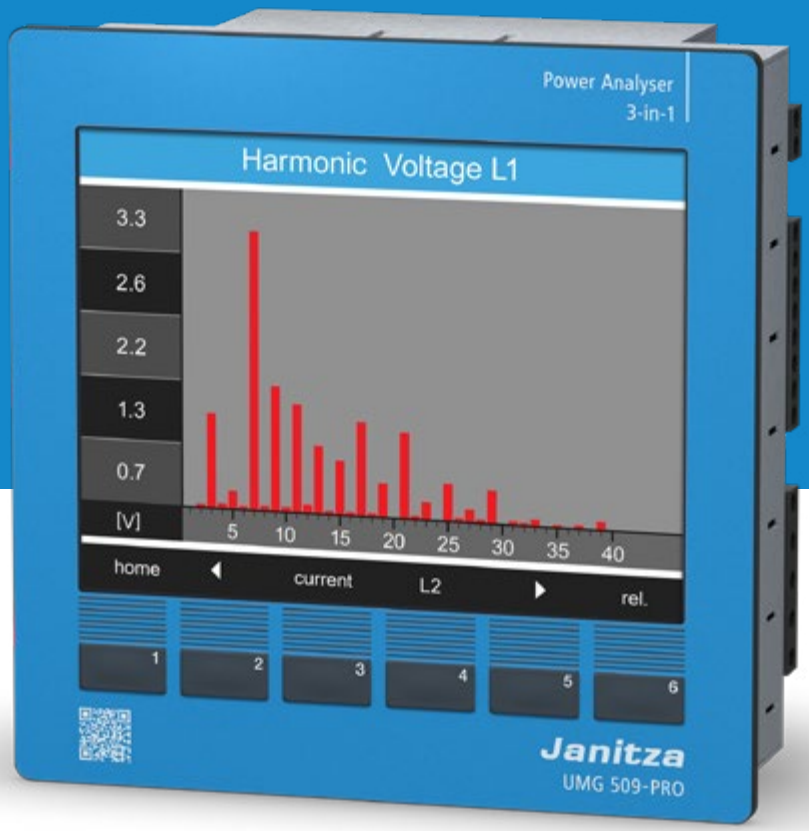

POWER QUALITY

Verification of the delivered power quality in the feeder

ENERGY MANAGEMENT

Additional features for energy data collection

RCM

Detect central grounding point and other leakage currents

DIMENSIONED DRAWING

All dimensions in mm

Side view

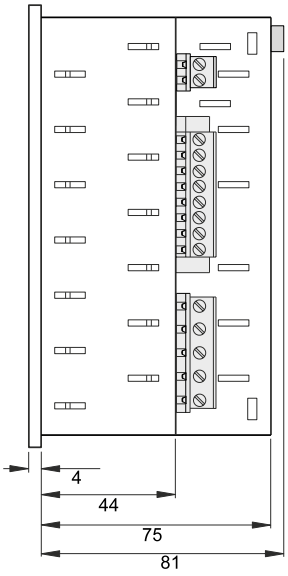

Bottom view

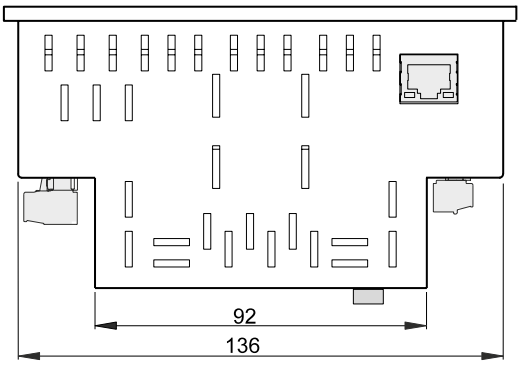

Cutout dimensions: 138$^{+0.8}$ x 138$^{+0.8}$ mm

CONNECTION EXAMPLE

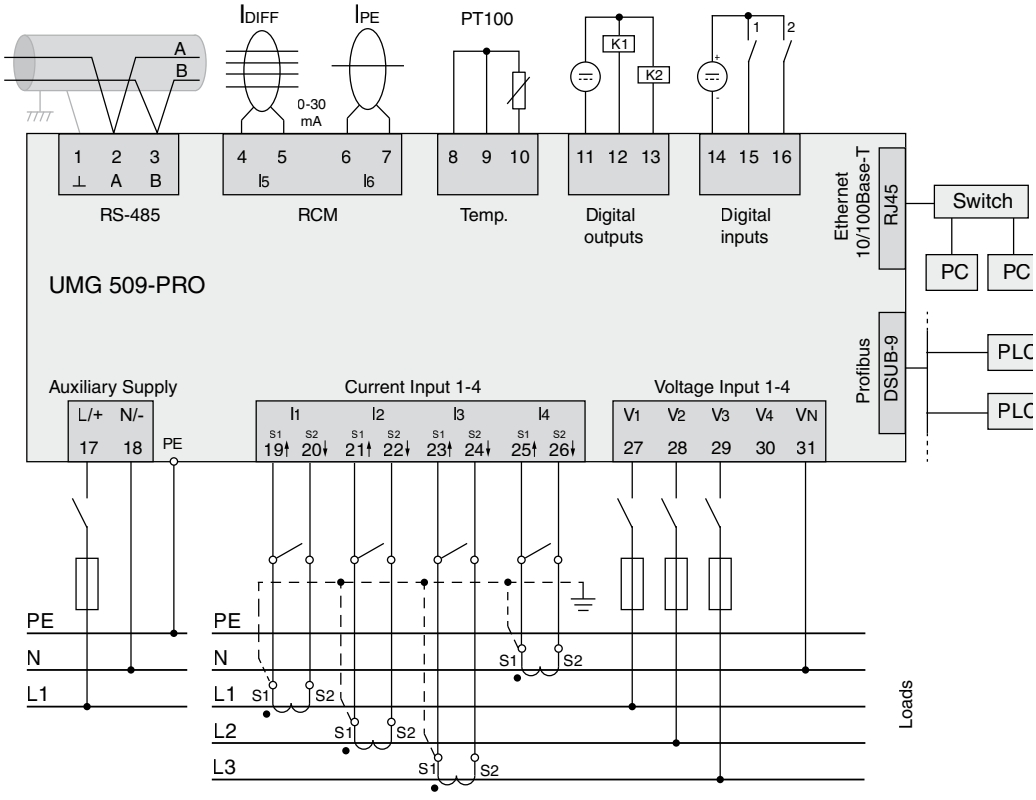

TECHNICAL DATA

	UMG 509-PRO	
ITEM NO.	**5226001**	**5226003**
Supply voltage, AC	95 …. 240 VAC	48 …. 110 V AC
Supply voltage, DC	80 … 300 VDC	24 …. 150 V DC
DEVICE OPTIONS		
BACnet communication	**5226081**	**5226081**
Basic package GridVis® edition Expert	**5100699**	**5100699**

A single GridVis® Expert item package can be purchased for this product (item no.: 5100699). This package contains 1 item with an update period of one year. You can extend this at any time for a further year (item no.: 5100739).

GENERAL	
Net weight (with attached plug-in connectors)	approx. 1080 g (2.38 lbs)
Device dimensions (W x H x D)	approx. 144 x 144 x 75 mm (5.67 x 5.67 x 2.95 in)
Battery	Type Li-Mn CR2450, 3V (UL 1642 approval)
Clock (in the temperature range from –40 °C to 85 °C)	±5 ppm (equivalent to 3 minutes per year)

TRANSPORT AND STORAGE The following information applies to devices that are transported or stored in their original packaging.	
Free fall	1 m
Temperature	–25 °C to +70 °C

ENVIRONMENTAL CONDITIONS DURING OPERATION	
The device is intended for weather-protected, stationary use. The device's ground wire connection must be connected! Protection class I according to IEC 60536 (VDE 0106, part 1).	
Working temperature range	–10 °C to +55 °C
Relative humidity	5 to 95 % (at 25 °C/77 °F), without condensation
Operating elevation	0 to 2000 m above sea level
Pollution degree	2
Mounting orientation	vertical
Ventilation	forced ventilation is not required
Protection against foreign matter and water Front Rear	 IP40 according to EN60529 IP20 according to EN60529

SUPPLY VOLTAGE	
Installation overvoltage category	300 V CAT III
Fuse protection of the supply voltage (fuse)	6 A, type B (approved according to UL/IEC)
Option 230 V: – Nominal range – Operating range – Power consumption	 95 V to 240 V (50/60 Hz) / DC 80 V to 300 V ±10 % of nominal range max. 7 W / 14 VA
Option 24 V: Nominal range Operating range Power consumption	 48 V to 110 V (50/60 Hz) or DC 24 to 150 V ±10 % of nominal range max. 9 W / 13 VA

CONNECTION CAPACITY OF THE TERMINALS (SUPPLY VOLTAGE) Connectible conductors. Only one conductor may be connected per terminal!	
Single core, multi-core, fine-stranded	0.2–2.5 mm², AWG 24-12
Terminal pins, wire ferrules	0.25–2.5 mm²
Tightening torque	0.5–0.6 Nm
Strip length	7 mm

CURRENT MEASUREMENT

Nominal current	5 A
Resolution	0.1 mA
Measuring range	0.005 to 7 Arms
Overrange (overload)	from 7.5 Arms
Crest factor	2.4
Overvoltage category	Option 230 V: 300 V CAT III Option 24 V: 300 V CAT II
Rated surge voltage	4 kV
Power consumption	approx. 0.2 VA (Ri = 5 mΩ)
Overload for 1 s	120 A (sinusoidal)
Sampling frequency	20 kHz/phase

VOLTAGE MEASUREMENT

The voltage measurement inputs are suitable for measurement in the following power supply systems:	
Three-phase 4-conductor systems with rated voltages up to	417 V / 720 V 347 V / 600 V UL listed
Three-phase 3-conductor systems with rated voltages up to	600 V
The voltage measurement inputs are designed as follows in terms of safety and reliability:	
Overvoltage category	600 V CAT III
Rated surge voltage	6 kV
Protection of the voltage measurement	1–10 A
Measuring range L-N	0[1] to 600 V_{rms}
Measuring range L-L	0[1] to 1000 V_{rms}
Resolution	0.01 V
Crest factor	1.6 (referred to 600 V_{rms})
Impedance	4 MΩ/phase
Power consumption	approx. 0.1 VA
Sampling frequency	20 kHz/phase
Transients	> 50 µs
Frequency of the fundamental oscillation – Resolution	40 Hz to 70 Hz 0.001 Hz

[1] The device can only determine measured values if a voltage L-N of greater than 10 V_{rms} or a voltage L-L of greater than 18 V_{rms} is present at at least one voltage measurement input.

PHASE ANGLE MEASURING ACCURACY 0.075°

CONNECTION CAPACITY OF THE TERMINALS (VOLTAGE AND CURRENT MEASUREMENT)

Connectible conductors. Only one conductor may be connected per terminal!

Single core, multi-core, fine-stranded	0.2–2.5 mm², AWG 24-12
Terminal pins, wire ferrules	0.25–2.5 mm²
Tightening torque	0.5–0.6 Nm
Strip length	7 mm

RESIDUAL CURRENT MEASUREMENT (RCM)

Nominal current	30 mA_{rms}
Measuring range	0 to 40 mA_{rms}
Operating current	100 µA
Resolution	1 µA
Crest factor	1.414 (relative to 40 mA)
Load	4 Ω
Overload for 1 s	5 A
Constant overloaded	1 A
Overload 20 ms	50 A
Measurement of residual currents	according to IEC/TR 60755 (2008-01), type A
Maximum external load	300 Ω (for cable break detection)

CONNECTION CAPACITY OF THE TERMINAL POINTS (RESIDUAL CURRENT MEASUREMENT)

Connectible conductors. Only one conductor may be connected per terminal!

Rigid/flexible	0.14–1.5 mm², AWG 28-16
Flexible with wire ferrules without plastic sleeve	0.20–1.5 mm²
Flexible with wire ferrules with plastic sleeve	0.20–1.5 mm²
Strip length	7 mm
Tightening torque	0.20–0.25 Nm
Line length	up to 30 m not shielded; greater than 30 m shielded

TEMPERATURE MEASUREMENT INPUT

3-wire measurement

Update time	1 second
Connectible sensors	PT100, PT1000, KTY83, KTY84
Total load (sensor and cable)	max. 4 kΩ
Line length	up to 30 m not shielded; greater than 30 m shielded

SENSOR TYPE	TEMPERATURE RANGE	RESISTANCE RANGE	MEASUREMENT UNCERTAINTY
KTY83	–55° C to +175° C (–67 °F to 347 °F)	500 Ω to 2.6 kΩ	±1.5 % rng
KTY84	–40° C to +300° C (–40 °F to 572 °F)	350 Ω to 2.6 kΩ	±1.5 % rng
PT100	–99° C to +500° C (–146.2 °F to 932 °F)	60 Ω to 180 Ω	±1.5 % rng
PT1000	–99° C to +500° C (–146.2 °F to 932 °F)	600 Ω to 1.8 kΩ	±1.5 % rng

CONNECTION CAPACITY OF THE TERMINAL POINTS (TEMPERATURE MEASUREMENT INPUT)

Connectible conductors. Only one conductor may be connected per terminal!

Single core, multi-core, fine-stranded	0.08–1.5 mm²
Terminal pins, wire end ferrules	1 mm²

DIGITAL INPUTS

2 digital inputs with a common ground

Maximum counter frequency	20 Hz
Response time (Jasic program)	200 ms
Input signal applied	18 V to 28 V DC (typically 4 mA)
Input signal not applied	0 to 5 V DC, current less than 0.5 mA
Cable length	up to 30 m not shielded; greater than 30 m shielded

DIGITAL OUTPUTS

2 digital outputs with a common ground; optocoupler, not short-circuit proof

Operating voltage	20 V–30 V DC (SELV or PELV supply)
Switching voltage	max. 60 VDC, 30 V AC
Switching current	max. 50 mA_{eff} AC/DC
Response time (Jasic program)	200 ms
Output of voltage dips	20 ms
Output of voltage exceedances	20 ms
Switching frequency	max. 20 Hz
Cable length	up to 30 m not shielded; greater than 30 m shielded

CONNECTION CAPACITY OF THE TERMINAL POINTS (DIGITAL INPUTS AND OUTPUTS)

Rigid/flexible	0.14–1.5 mm², AWG 28-16
Flexible with wire ferrules without plastic sleeve	0.25–1.5 mm²
Flexible with wire ferrules with plastic sleeve	0.25–0.5 mm²
Tightening torque	0.22–0.25 Nm
Strip length	7 mm

RS-485 INTERFACE

3-wire connection with GND, A, B

Protocol	Modbus RTU/Slave, Modbus RTU/Master, Modbus RTU/Gateway
Transmission rate	9.6 kbps, 19.2 kbps, 38.4 kbps, 57.6 kbps, 115.2 kbps, 921.6 kbps
Termination resistor	Can be activated via microswitch

PROFIBUS INTERFACE

Connection	SUB D 9-pin
Protocol	Profibus DP/V0 according to EN 50170
Transmission rate	9.6 kBaud to 12 MBaud

ETHERNET INTERFACE

Connection	RJ45
Function	Modbus gateway, embedded web server (HTTP)
Protocols	CP/IP, EMAIL (SMTP), DHCP client (BootP), Modbus/TCP, Modbus RTU over Ethernet, FTP, ICMP (Ping), NTP, TFTP, BACnet (option), SNMP

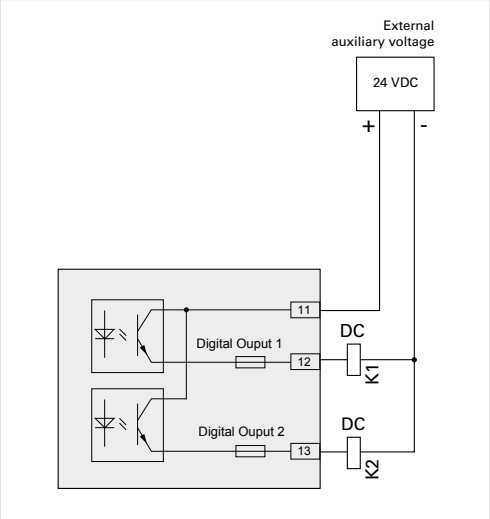

Fig.: Connection example of two electronic relays to the digital outputs

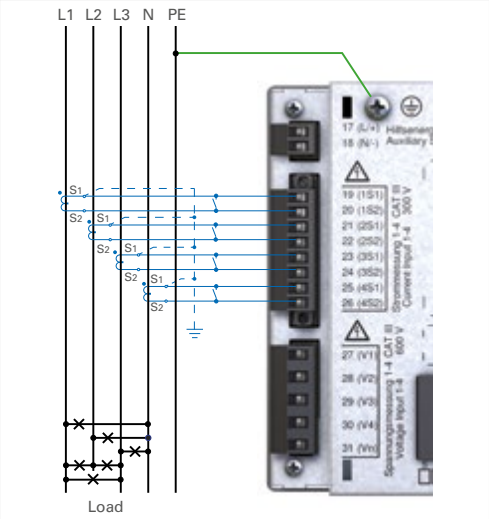

Fig.: Current measurement example

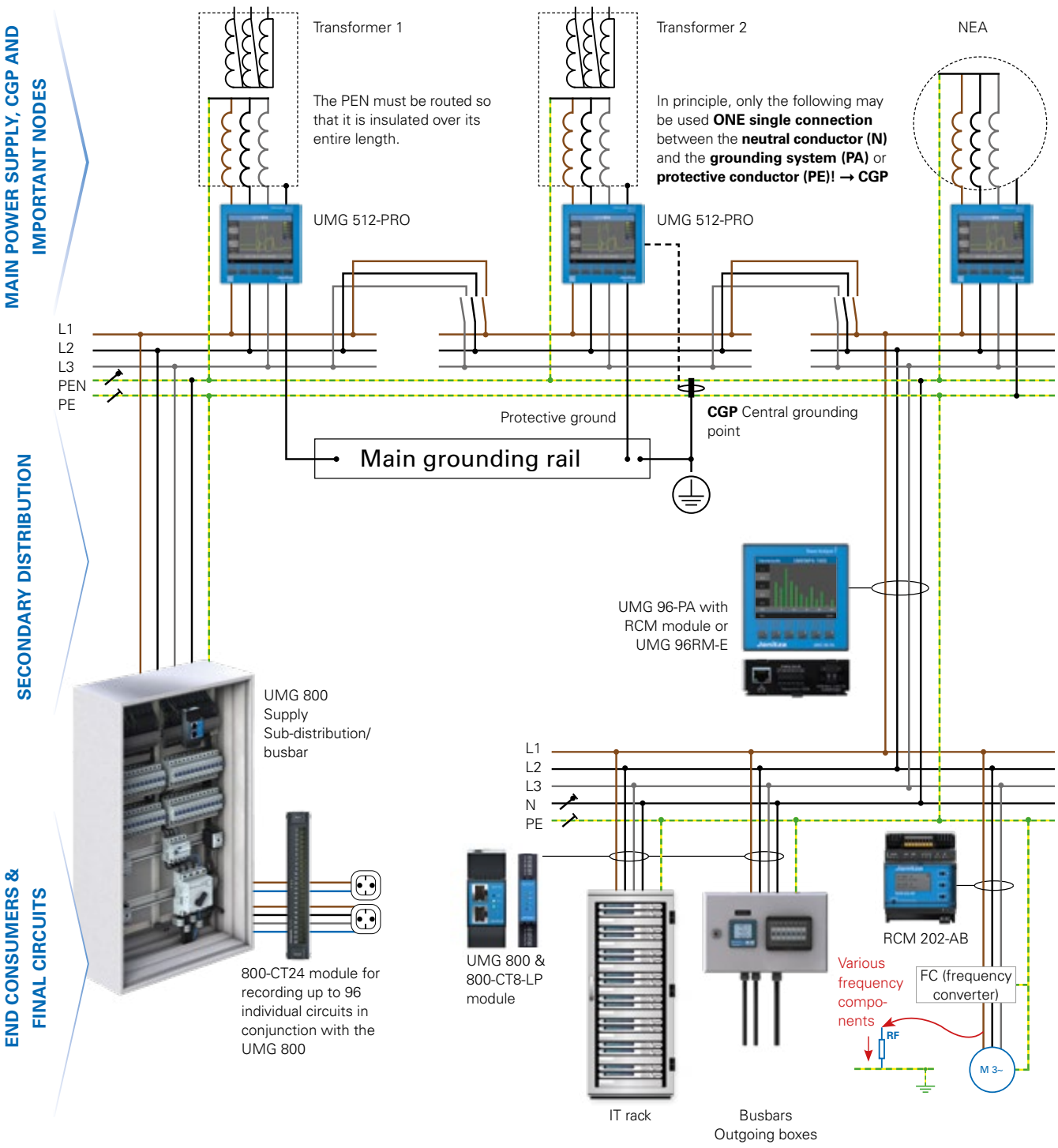

Fig.: Holistic energy & residual current monitoring

UMG 512-PRO

CERTIFIED POWER QUALITY ANALYZER

CLASS A ACCORDING TO IEC 61000-4-30

MEASURING ACCURACY
- Class A certified
- 512 measurement points per period
- Current & voltage: 0.1 %

POWER QUALITY
- Harmonics current up to the 63rd harmonic
- Flicker measurement
- Events and transients
- Power quality analysis onboard
- EN 50160 and EN 61000-2-4

MEASUREMENT DATA MEMORY
- 256 MB/approx. 3.11 months (according to factory setting)
- Memory range up to 2 years
- User-defined memory segmentation

RESIDUAL CURRENT MONITORING
- Continuous residual current measurement
- Ideal for CGP

OPERATION
- Color graphic display & intuitive user guidance
- Graphic display of measured values

INTERFACES
- Ethernet
- Profibus (DSUB-9)
- RS-485 Modbus

PROGRAMMABLE
- PLC functionality
- Graphic programming
- Jasic®

DEVICE HOMEPAGE
- Device has own homepage
- Functional enhancement through APPs
- Remote control of the device display via the homepage
- Online data and historical data

UMG 512-PRO



POWER QUALITY

Power quality analyzer according to IEC 61000-4-30 Class A

CERTIFICATION

Testing and certification by external testing laboratory

COMMUNICATION

Export of power quality data via COMTRADE format

DIMENSIONED DRAWING

All dimensions in mm

Side view

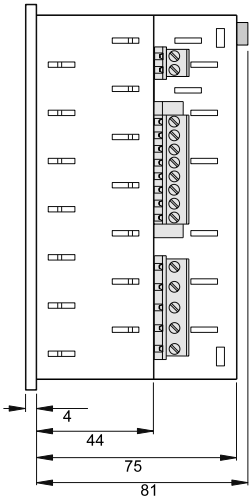

Bottom view

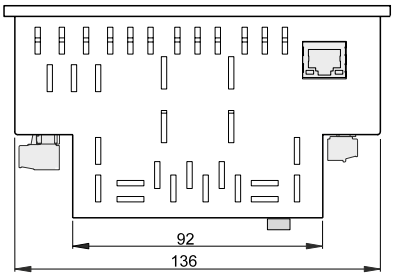

Rear view

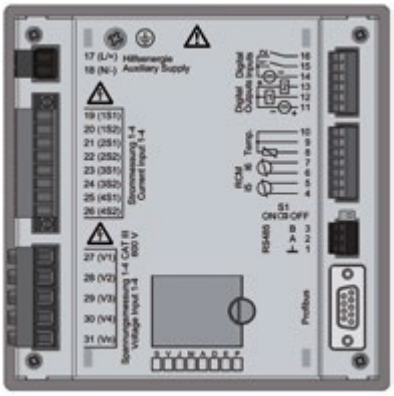

Cutout dimensions: 138$^{+0.8}$ x 138$^{+0.8}$ mm

CONNECTION EXAMPLE

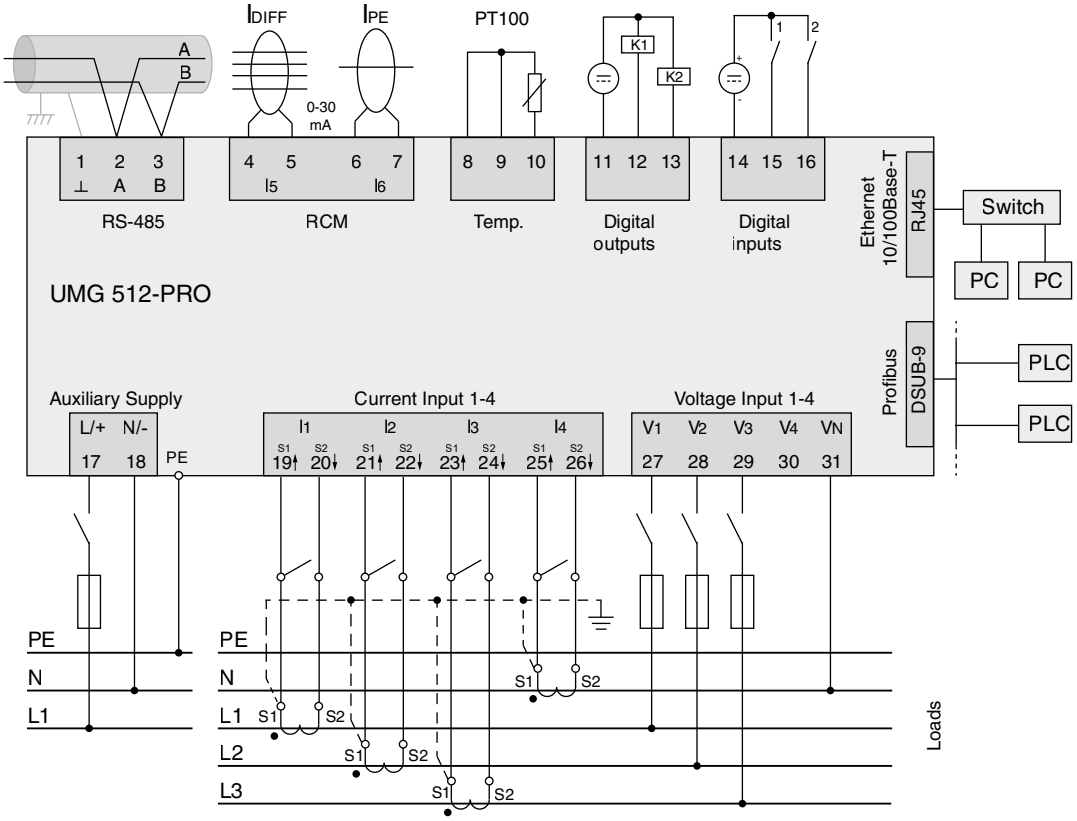

TECHNICAL DATA

	UMG 512-PRO	
ITEM NO.	**5217011**	**5217003**
Supply voltage, AC	95 …. 240 VAC	48 …. 110 V AC
Supply voltage, DC	80 …. 300 VDC	24 …. 150 V DC
DEVICE OPTIONS		
BACnet communication	**5217081**	**5217081**
Basic package GridVis® edition Expert	**5100699**	**5100699**

A single GridVis® Expert item package can be purchased for this product (item no.: 5100699). This package contains 1 item with an update period of one year. You can extend this at any time for a further year (item no.: 5100739).

GENERAL	
Net weight (with connectors)	approx. 1080 g (2.38 lbs)
Device dimensions (W x H x D)	approx. 144 x 144 x 75 mm (5.64 x 5.64 x 2.95 in)
Battery	Type LMO CR2450, 3 V (UL 1642 approved)
Clock (temperature range from –40 °C to +85 °C (–40 °F to 185 °F)	±5 ppm (equivalent to 3 minutes per year)
Impact resistance	IK07 according to IEC 62262

TRANSPORT AND STORAGE
The following information applies to devices that are transported or stored in their original packaging.

Free fall	1 m (39.37 in)
Temperature	–25 °C to +70 °C (–13 °F to 158 °F)

ENVIRONMENTAL CONDITIONS DURING OPERATION	
The device is intended for weather-protected, stationary use and must be connected to the ground wire connection! Protection class I according to IEC 60536 (VDE 0106, Part 1).	
Working temperature range	–10 °C to +55 °C (14 °F to 131 °F)
Relative humidity	5 to 95 % (at 25 °C/77 °F), no condensation
Operating elevation	0 to 2000 m (6562 ft) above sea level
Pollution degree	2
Mounting orientation	vertical
Ventilation	forced ventilation is not required
Protection against foreign matter and water – Front – Rear	 IP40 according to EN60529 IP20 according to EN60529

SUPPLY VOLTAGE	
Installation overvoltage category	300 V CAT III
Fuse protection of the supply voltage (fuse)	6 A, type B (approved according to UL/IEC)
Option 230 V: – Nominal range – Operating range – Power consumption	 95 V to 240 V (50/60 Hz) / DC 80 V to 300 V ±10 % of nominal range max. 7 W / 14 VA
Option 24 V: – Nominal range – Operating range – Power consumption	 48 V to 110 V (50/60 Hz) / DC 24 to 150 V ±10 % of nominal range max. 9 W / 13 VA

CONNECTION CAPACITY OF THE TERMINALS (SUPPLY VOLTAGE)
Connectible conductors. Only one conductor may be connected per terminal!

Single core, multi-core, fine-stranded	0.2–4 mm², AWG 28-12
Wire ferrules (non-insulated)	0.2–2.5 mm², AWG 26-14
Wire ferrules (insulated)	0.2–2.5 mm², AWG 26-14
Tightening torque	0.4–0.5 Nm (3.54–4.43 lbf in)
Strip length	7 mm (0.2756 in)

CURRENT MEASUREMENT	
Nominal current	5 A
Resolution	0.1 mA
Measuring range	0.005 to 7 A_{rms}
Overrange (overload)	from 8.5 A_{rms}
Crest factor	1.41
Overvoltage category	Option 230 V: 300 V CAT III Option 24 V: 300 V CAT II
Rated surge voltage	4 kV
Power consumption	approx. 0.2 VA (Ri = 5 mΩ)
Overload for 1 s	120 A (sinusoidal)
Sampling frequency	25.6 kHz / phase

VOLTAGE MEASUREMENT The voltage measurement inputs are suitable for measurement in the following power supply systems:	
Three-phase 4-conductor systems with rated voltages up to	417 V / 720 V (+10 %) 347 V / 600 V (UL listed)
Three-phase 3-conductor systems with rated voltages up to	600 V (+10 %)
The voltage measurement inputs are designed as follows in terms of safety and reliability:	
Overvoltage category	600 V CAT III
Rated surge voltage	6 kV
Protection of the voltage measurement	1–10 A
Measuring range L-N	0[1] to 600 V_{rms}
Measuring range L-L	0[1] to 1000 V_{rms}
Resolution	0.01 V
Crest factor	1.6 (relative to 600 V_{rms})
Impedance	4 MΩ/phase
Power consumption	approx. 0.1 VA
Sampling frequency	25.6 kHz / phase
Transients	39 µs
Udin[2] according to EN61000-4-30	100 to 250 V
Flicker range (dU/U)	27.5 %
Frequency of the fundamental oscillation – Resolution	15 Hz to 440 Hz 0.001 Hz

[1] The device can only determine measured values if a voltage L-N of greater than 10 V_{rms} or a voltage L-L of greater than 18 V_{rms} is present at at least one voltage measurement input.
[2] Udin = Agreed input voltage according to DIN EN 61000-4-30

MEASURING ACCURACY, PHASE ANGLE	0.075°

CONNECTION CAPACITY OF THE TERMINALS (VOLTAGE MEASUREMENT) Connectible conductors. Only connect one conductor per terminal point!	
Single core, multi-core, fine-stranded	0.2–4 mm², AWG 28-12
Wire ferrules (non-insulated)	0.2–2.5 mm², AWG 26-14
Wire ferrules (insulated)	0.2–2.5 mm², AWG 26-14
Tightening torque	0.4–0.5 Nm (3.54–4.43 lbf in)
Strip length	7 mm (0.2756 in)

CONNECTION CAPACITY OF THE TERMINALS (CURRENT MEASUREMENT) Connectible conductors. Only connect one conductor per terminal point!	
Single core, multi-core, fine-stranded	0.2–4 mm², AWG 28-12
Wire ferrules (non-insulated)	0.2–4 mm², AWG 26-12
Wire ferrules (insulated)	0.2–2.5 mm², AWG 26-14
Tightening torque	0.4–0.5 Nm (3.54–4.43 lbf in)
Strip length	7 mm (0.2756 in)

RESIDUAL CURRENT MEASUREMENT (RCM)

Nominal current	30 mA_{rms}
Measuring range	0 to 40 mA_{rms}
Operating current	100 µA
Resolution	1 µA
Crest factor	1.414 (relative to 40 mA)
Load	4 Ω
Overload for 1 s	5 A
Constant overloaded	1 A
Overload 20 ms	50 A
Measurement of residual currents	according to IEC/TR 60755 (2008-01), Type A
Maximum external load	300 Ω (for cable break detection)

TERMINAL CONNECTION CAPACITY (RESIDUAL CURRENT MEASUREMENT)

Connectible conductors. Only connect one conductor per terminal point!

Single core, multi-core, fine-stranded	0.2–1.5 mm^2, AWG 28-16
Wire ferrules (non-insulated)	0.2–1.5 mm^2, AWG 26-16
Wire ferrules (insulated)	0.2–1.5 mm^2, AWG 26-16
Tightening torque	0.2–0.25 Nm (1.77–2.21 lbf in)
Stripping length 7 mm	7 mm (0.2756 in)
Line length	Up to 30 m (32.81 yd) not shielded; Greater than 30 m (32.81 yd) shielded

POTENTIAL ISOLATION AND ELECTRICAL SAFETY OF THE RESIDUAL CURRENT MEASUREMENT INPUTS

– The RCM measurement inputs are double-insulated from the current and voltage measurement inputs and the supply voltage.
– There is no isolation to the temperature measurement input.
– There is only functional isolation to the Ethernet, Profibus, RS-485 and digital I/O interfaces.
– The connected residual current transformers and the lines to be measured must each have at least one additional or basic insulation in accordance with IEC61010-1:2010 for the mains voltage that is applied.

TEMPERATURE MEASUREMENT INPUT

3-wire measurement

Update time	1 second
Connectible sensors	PT100, PT1000, KTY83, KTY84
Total load (sensor and cable)	max. 4 kΩ
Line length	Up to 30 m (32.81 yd) not shielded; greater than 30 m (32.81 yd) shielded

SENSOR TYPE	TEMPERATURE RANGE	RESISTANCE RANGE	MEASUREMENT UNCERTAINTY
KTY83	–55° C to +175° C (–67 °F to 347 °F)	500 Ω to 2.6 kΩ	±1.5 % rng
KTY84	–40° C to +300° C (–40 °F to 572 °F)	350 Ω to 2.6 kΩ	±1.5 % rng
PT100	–99° C to +500° C (–146.2 °F to 932 °F)	60 Ω to 180 Ω	±1.5 % rng
PT1000	–99° C to +500° C (–146.2 °F to 932 °F)	600 Ω to 1.8 kΩ	±1.5 % rng

TERMINAL CONNECTION CAPACITY (TEMPERATURE MEASUREMENT INPUT)

Connectible conductors. Only connect one conductor per terminal point!

Single core, multi-core, fine-stranded	0.2–1.5 mm^2, AWG 28-16
Wire ferrules (non-insulated)	0.2–1.5 mm^2, AWG 26-16
Wire ferrules (insulated)	0.2–1.5 mm^2, AWG 26-16
Tightening torque	0.2–0.25 Nm (1.77–2.21 lbf in)
Strip length	7 mm (0.2756 in)

POTENTIAL ISOLATION AND ELECTRICAL SAFETY OF THE TEMPERATURE MEASUREMENT INPUTS

– The temperature measurement input is double-insulated from the current and voltage measurement inputs and the supply voltage.
– There is no isolation from the RCM measuring input.
– There is only functional isolation to the Ethernet, Profibus, RS-485 and digital I/O interfaces.
– The external temperature sensor must be double insulated relative to system components with dangerous contact voltage (according to IEC61010-1:2010).

DIGITAL INPUTS
2 digital inputs with a common ground

Maximum counter frequency	20 Hz
Response time (Jasic program)	200 ms
Input signal applied	18 V to 28 V DC (typically 4 mA) (SELV or PELV supply)
Input signal not applied	0 to 5 V DC, current less than 0.5 mA
Line length	Up to 30 m (32.81 yd) unshielded; greater than 30 m (32.81 yd) shielded

DIGITAL OUTPUTS
2 digital outputs with a common ground; optocoupler, not short-circuit proof

Operating voltage	20 V–30 V DC (SELV or PELV supply)
Switching voltage	Max. 60 V DC
Switching current	max. 50 mA_{eff} AC/DC
Response time (Jasic program)	200 ms
Switching frequency	max. 20 Hz
Line length	Up to 30 m (32.81 yd) not shielded; Greater than 30 m (32.81 yd) shielded

TERMINAL CONNECTION CAPACITY (DIGITAL INPUTS AND OUTPUTS)
Connectible conductors. Only connect one conductor per terminal point!

Single core, multi-core, fine-stranded	0.2–1.5 mm^2, AWG 28-16
Wire ferrules (non-insulated)	0.2–1.5 mm^2, AWG 26-16
Wire ferrules (insulated)	0.2–1.5 mm^2, AWG 26-16
Tightening torque	0.2–0.25 Nm (1.77–2.21 lbf in)
Strip length	7 mm (0.2756 in)

POTENTIAL ISOLATION AND ELECTRICAL SAFETY OF THE DIGITAL INPUTS AND OUTPUTS

– The digital inputs and outputs are double-insulated from the current and voltage measurement inputs and the supply voltage.
– Relative to each other and to the Ethernet, Profibus, RS-485 and digital I/O interfaces there is only functional isolation.
– The auxiliary voltage to be connected externally must be implemented with SELV or PELV.

RS-485 INTERFACE
3-wire connection with GND, A, B

Protocol	Modbus RTU/slave, Modbus RTU/master, Modbus RTU/gateway
Transmission rate	9.6 kbps, 19.2 kbps, 38.4 kbps, 57.6 kbps, 115.2 kbps, 921.6 kbps
Termination resistor	Can be activated via microswitch

TERMINAL CONNECTION CAPACITY (SERIAL INTERFACE – RS-485)
Connectible conductors. Only connect one conductor per terminal point!

Single core, multi-core, fine-stranded	0.2–1.5 mm^2, AWG 28-16
Wire ferrules (non-insulated)	0.2–1.5 mm^2, AWG 26-16
Wire ferrules (insulated)	0.2–1.5 mm^2, AWG 26-16
Tightening torque	0.2–0.25 Nm (1.77–2.21 lbf in)
Strip length	7 mm (0.2756 in)

PROFIBUS INTERFACE

Connection	SUB D 9-pin
Protocol	Profibus DP/V0 according to EN 50170
Transmission rate	9.6 kBaud to 12 MBaud

ETHERNET INTERFACE

Connection	RJ45
Function	Modbus gateway, embedded web server (HTTP)
Protocols	CP/IP, EMAIL (SMTP), DHCP client (BootP), Modbus/TCP, Modbus RTU over Ethernet, FTP, ICMP (Ping), NTP, TFTP, BACnet (option), SNMP

POTENTIAL ISOLATION AND ELECTRICAL SAFETY OF THE INTERFACES

– The RS-485, Profibus and Ethernet interfaces are double insulated from the current and voltage measurement inputs as well as from the supply voltage.
– Relative to each other and to the RCM and temperature as well as the digital I/O measuring inputs there is only functional isolation.
– The interfaces of the devices connected here must have double or reinforced insulation from mains voltages (according to IEC 61010-1: 2010).

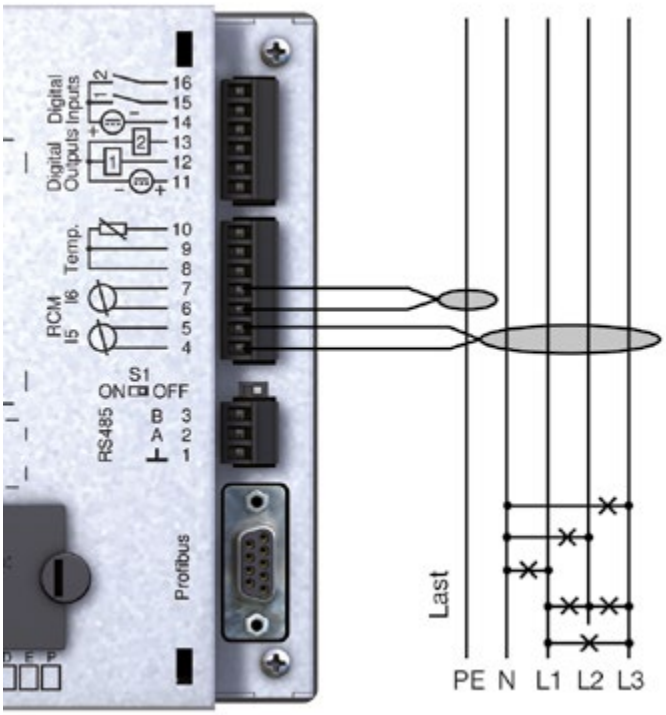

Fig.: Connection example for residual current measurement and PE via current transformer

DIN RAIL MEASUREMENT DEVICES



UMG 103-CBM
Compact energy analyzer



UMG 800
Modularly expandable energy analyzer



UMG 801
Modularly expandable network analyzer



UMG 604-PRO
Network analyzer



UMG 605-PRO
Power quality analyzer Class S according to IEC 61000-4-30



RCM 202-AB
Residual current analyzer device Type AB



RCM 201-ROGO
Residual current monitoring device Type A with Rogowski current transformer



MID energy meters
MID and IEC calibrated ex works, lead-sealed terminal cover

DIN RAIL MEASUREMENT DEVICES



Overviews

106	UMG 103-CBM	Compact energy analyzer
112	UMG 800	Modularly expandable energy analyzer
120	UMG 801	Modularly expandable power analyzer
130	UMG 800 & UMG 801	Modules
148	UMG 604-PRO	Functionally expandable power analyzer
156	UMG 605-PRO	Power quality analyzer (Class S according to IEC 61000-4-30)
162	RCM 202-AB	Residual current analyzer, type AB
168	RCM 201-ROGO	Residual current monitor, type A
174	MID energy meters	MID and IEC calibrated ex works

UMG 103-CBM

COMPACT ENERGY ANALYZER

COMPARATOR
- Limit value monitoring of current, voltage, power

INTERFACES
- RS-485

MEASURED VOLTAGE
- No additional supply necessary

DESIGN
- Low installation depth
- Compatible with sub distributors
- DIN rail: No door cutout necessary
- Up to 8 meters on a DIN rail in a 600 mm cabinet

MEASUREMENT DATA MEMORY
- 4 MB/approx. 3 months (according to factory setting)

MEASURING ACCURACY
- Class 0.5S
- Current: 0.5 %
- Voltage: 0.2 %
- Sampling frequency 5.4 kHz

POWER QUALITY
- Harmonics current up to the 40th harmonic
- Distortion factor THD-U/THD-I
- Minimum & maximum values

UMG 103-CBM



ENERGY MANAGEMENT

Storage of historical values and subsequent analysis

COMPACT

Low installation depth -> Compatible with sub distributors

POWER QUALITY

Measurement up to the 40th harmonic

DIMENSIONED DRAWING

All dimensions in mm

Front view

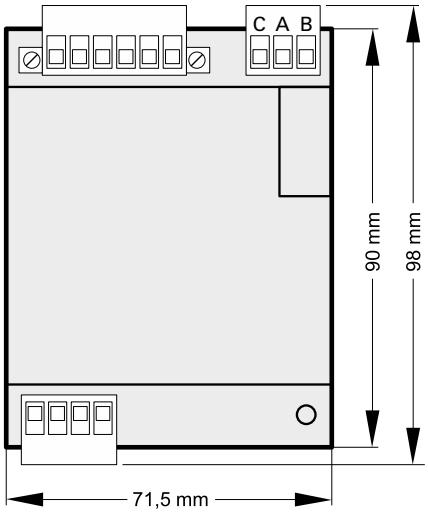

Requires 4 HP (Horizontal pitch)

Side view

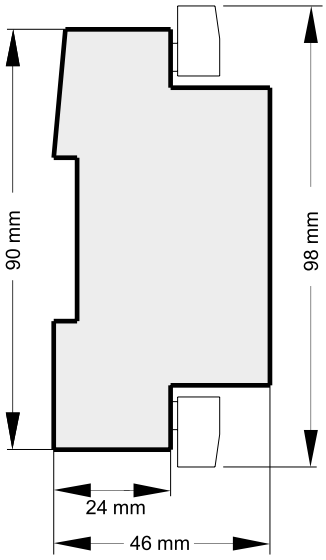

CONNECTION EXAMPLE

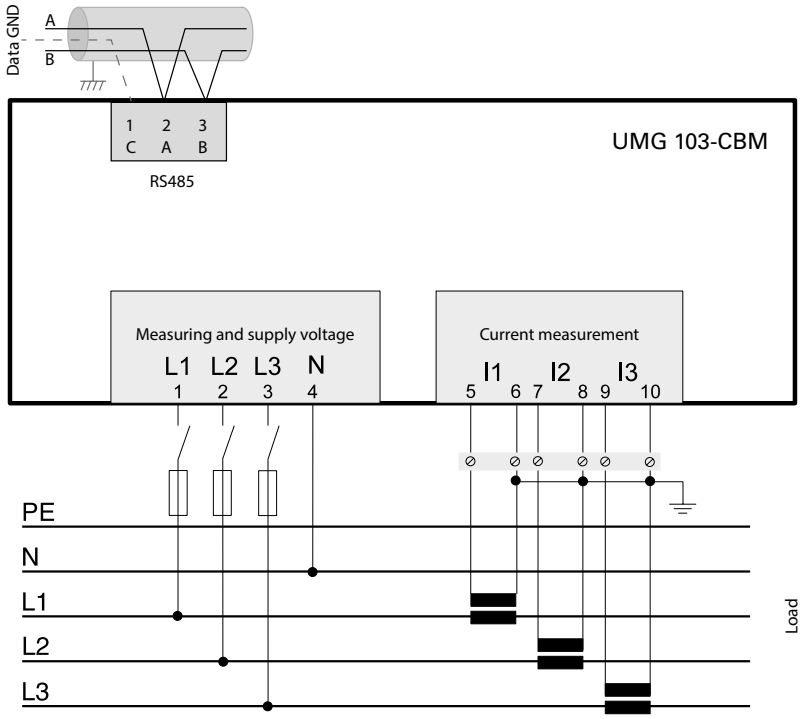

ILLUSTRATION OF TYPICAL APPLICATION WITH 2 FEEDERS

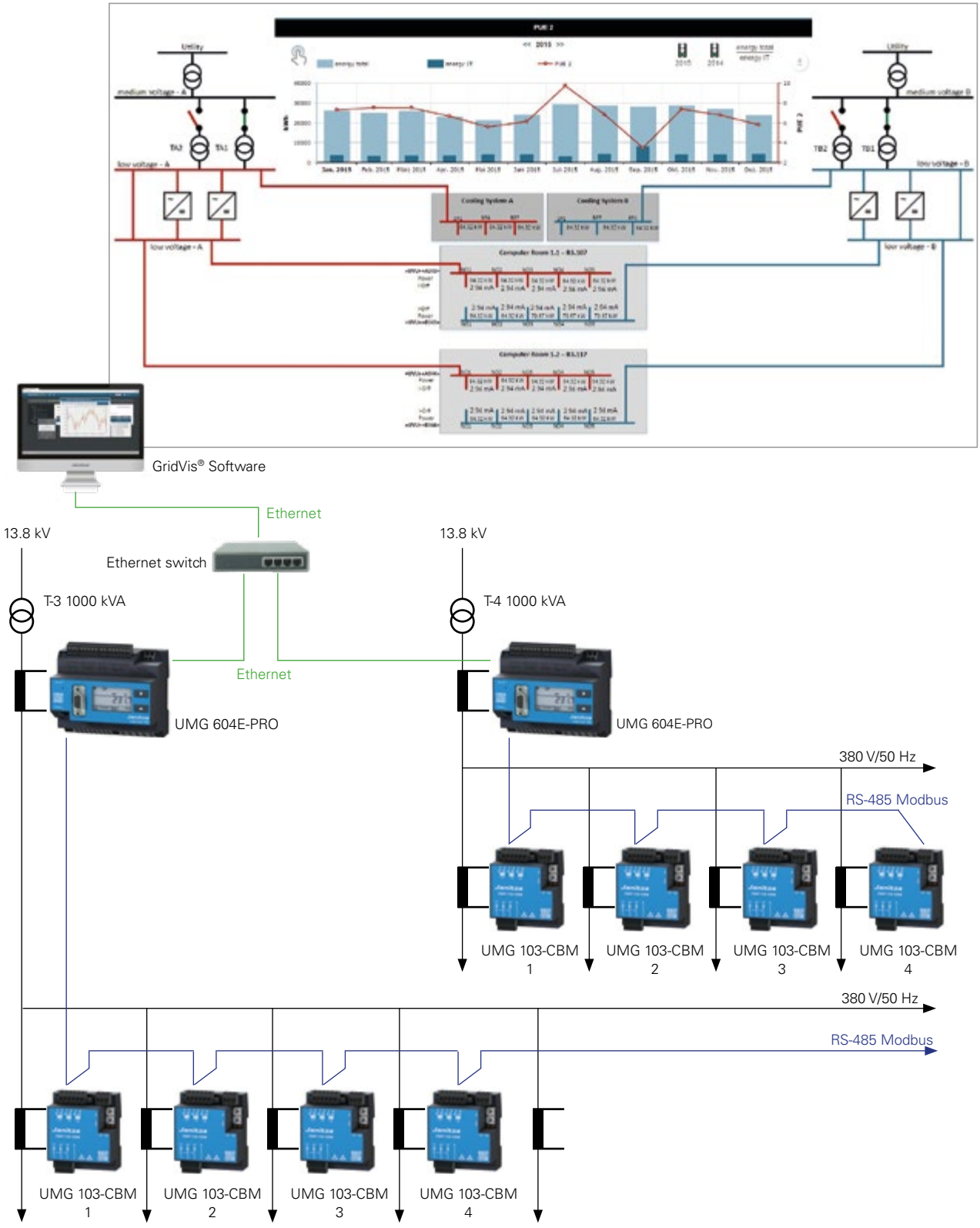

Fig.: Illustration of typical application with 2 feeders, UMG 604-PRO as master meters in the main feeder and UMG 103-CBM for measuring the low voltage outgoing feeders.

TECHNICAL DATA

UMG 103-CBM	
ITEM NO.	**5228001**
GENERAL	
Net weight (with attached plug-in connectors)	approx. 200 g (0.44 lbs)
Device dimensions (W x H x D)	71.5 x 98 x 46 mm (2.82 x 3.86 x 1.18 in)
Horizontal pitch	4 HP
TRANSPORT AND STORAGE The following information applies to devices that are transported or stored in their original packaging.	
Free fall	1 m (39.37 in)
Temperature	–20 °C to +70 °C (68 °F to 158 °F)
Relative humidity	0 to 90 % RH
ENVIRONMENTAL CONDITIONS DURING OPERATION	
The device: – is for weather-protected and stationary use. – fulfills the operating conditions according to DIN IEC 60721-3-3 – has protection class II according to IEC 60536 (VDE 0106, part 1) and does not require a ground wire connection.	
Working temperature range	–25 °C to +60 °C (–13 °F to 140 °F)
Relative humidity	5 to 95 % (at +25 °C/77 °F), no condensation
Operating elevation	0 to 2000 m (6562 ft) above sea level
Pollution degree	2
Housing flammability classification	UL 94V-0
Mounting orientation	As desired
Ventilation	No forced ventilation required
Installation/assembly	DIN rail, 35 mm, to IEC/EN60999-1, DIN EN50022
Stress due to impact	2 joules, IK07 according to IEC/EN61010-1:2010
Protection against foreign matter and water	IP20 according to EN60529, September 2000, IEC60529:1989
MEASUREMENT DATA RECORDING	
Memory (flash)	4 MB
Battery (soldered), typical life expectancy	BR 1632, 3 V, 8–10 years
SUPPLY VOLTAGE (The device obtains the supply voltage from the measured voltage!)	
Supply from 1st phase	115–277 V (±10 %), 50/60 Hz
Supply from 3 phases	80–277 V (±10 %), 50/60 Hz
Power consumption	max. 1.5 VA
VOLTAGE MEASUREMENT	
3-phase 4-wire systems with nominal voltages (L-N/L-L)	max. 277 V/480 V
Networks	Measurement in TT and TN networks
Rated surge voltage	4 kV
Protection of the voltage measurement	1–10 A tripping characteristic B, (with IEC/UL approval)
Overvoltage category	300 V CAT III
Resolution	0.01 V
Crest factor	2 (relative to 240 V_{rms})
Sampling frequency	5.4 kHz
Frequency of the fundamental oscillation - Resolution	45 Hz to 65 Hz 0.001 Hz
Fourier analysis	1st–40th Harmonic

CURRENT MEASUREMENT

Nominal current	5 A
Rated current	6 A
Crest factor	2 (relative to 6 A_{rms})
Resolution	0.1 mA
Measuring range	0.005 to 6 Arms
Overvoltage category	300 V CAT II
Rated surge voltage	2 kV
Power consumption	approx. 0.2 VA (Ri = 5 mΩ)
Overload for 1 s	60 A (sinusoidal)
Sampling frequency	5.4 kHz/phase

TERMINAL CONNECTION CAPACITY

Connectible conductors. Only connect one conductor per terminal!

Single core, multi-core, fine-stranded	0.08–2.5 mm², AWG 28-12
Tightening torque	max. 0.5 Nm (4.43 lbf in)
Strip length	min. 8 mm (0.2756 in)

SERIAL INTERFACE (RS485)

Protocol, Modbus RTU	Modbus RTU/Slave
Transmission rate	9.6 kbps, 19.2 kbps, 38.4 kbps, 57.6 kbps, 115.2 kbps Factory setting: automatic detection

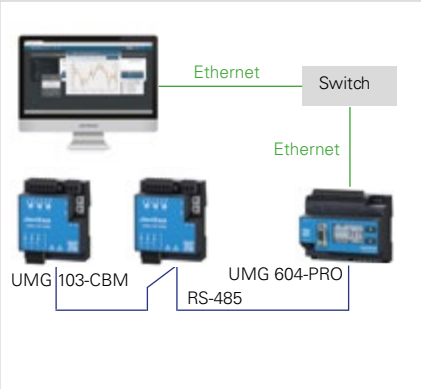

Fig.: Connection of several UMG 103-CBMs to a PC via a UMG 604-PRO (with Ethernet option)

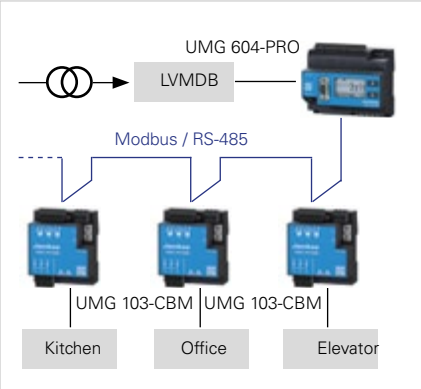

Fig.: Topology example for UMG 604-PRO (master) – UMG 103-CBM (slave)

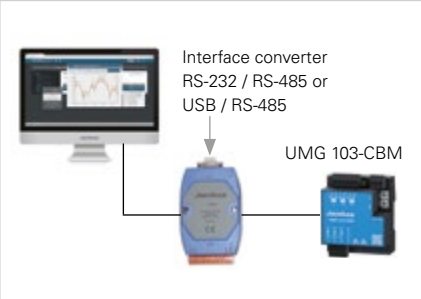

Fig.: Connection of a UMG 103-CBM to a PC via an interface converter

UMG 800

MODULARLY EXPANDABLE ENERGY ANALYZER

CONNECTIVITY
- RS485 interface
- 2 Ethernet interfaces for simultaneous or separate use
- OPC UA
- NTP
- Modbus whitelisting
- Modbus TCP/IP gateway (up to 31 slaves)
- USB interface

MEASUREMENT ACCURACY
- 200 ms min/max values
- Gridded or sliding average values
- Precise real-time measurement

WEBSERVER
- Integrated web server for convenient commissioning and configuration
- No additional software required for commissioning

POWER QUALITY
- Detect irregularities and improve power quality
- Detect flicker and harmonics up to 63rd harmonic detection
- Waveform detection for cause and event analysis
- Events & transients (voltage only)

VIRTUAL METER
- Create and combine virtual measurement variables and measurement groups for greater measurement flexibility
- Quickly adapt changed system configuration or measurement requirements

COMPARATOR
- Early warning of limit value violations and deviations in consumption
- Monitoring of overcurrent alarms and collective fault messages
- Up to 32 comparison groups and 125 comparators

UMG 800



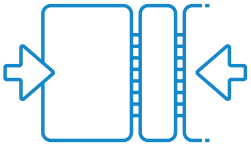

SPACE-SAVING

Compact base unit with 2 HP and extension modules with 1-4 HP



COST-EFFICIENT

Start with just a few functions and expand cost-effectively as required

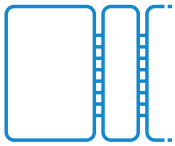

MODULAR

New requirements with suitable modules

DIMENSIONED DRAWING

All dimensions in mm

Rear view

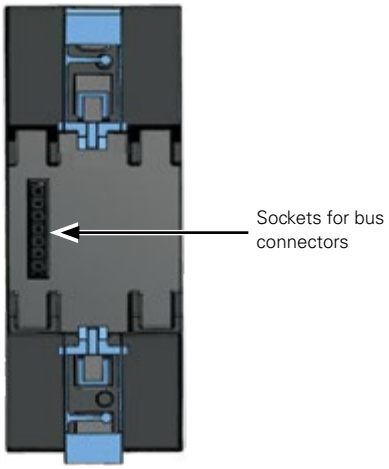

Bottom view



Top view



Bus connector

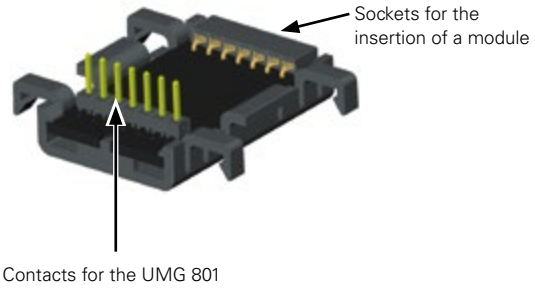

Front view

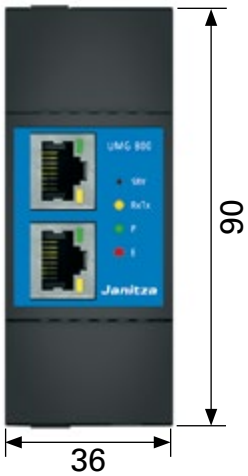

View from left

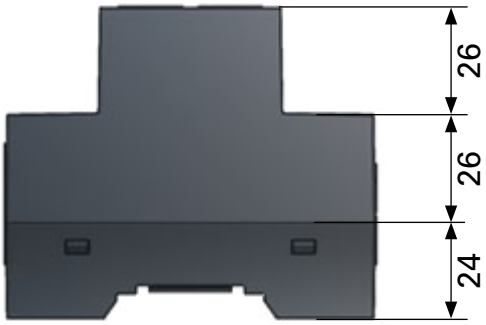

Requires 2 HP (Horizontal pitch)

CONNECTION EXAMPLE

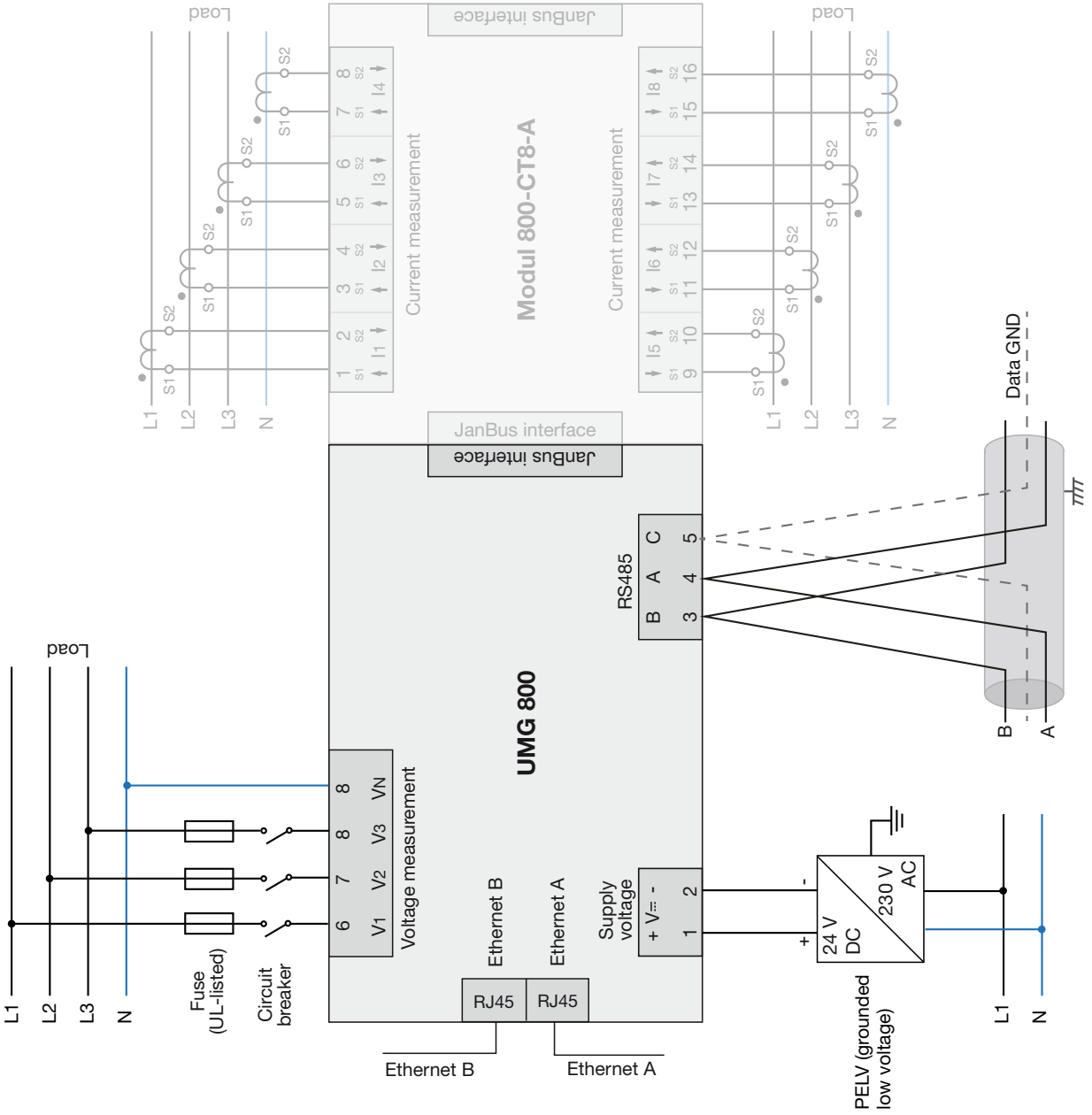

TECHNICAL DATA

UMG 800	
ITEM NO. (UL-CERTIFIED)	**5238001**
ITEM NO.	**5238002**
GENERAL	
Net weight (with plug-in terminals)	approx. 120 g (0.265 lb)
Device dimensions (W x H x D)	approx. 36 x 90 x 76 mm (1.42 x 3.54 x 2.99 in)
Width in width units (TE)	2 HP (1 HP = 18 mm)
Battery	Lithium CR1632, 3 V, non-replaceable (UL1642 approval)
Integrated memory	4 GB
Mounting orientation	As desired
Fastening/mounting – Suitable DIN rails – 35 mm (1.38 in)	TS 35/7.5 nach EN 60715 TS 35/10 TS 35/15 x 1.5
Clock error – in the temperature range from 18 °C (64 °F) to 28 °C (82 °F)	±5 ppm (corresponds to 3 min./year)
Impact resistance	IK07 according to IEC 62262
TRANSPORT AND STORAGE The following specifications apply for devices transported and stored in the original packaging.	
Free fall	1 m (39.37 in)
Temperatur	–25 °C to +70 °C (–13 °F to 158 °F)
Relative humidity	5 to 95 % at 25 °C (77 °F), no condensation
ENVIRONMENTAL CONDITIONS DURING OPERATION	
The device: – Is for weather-protected and stationary use. – Fulfills operating conditions according to DIN IEC 60721-3-3. – Has protection class II according to IEC 60536 (VDE 0106, part 1), a ground wire connection is not required!	
Rated temperature range	–10 °C to +55 °C (14 °F to 131 °F)
Relative humidity	5 to 95 % at 25 °C (77 °F), no condensation
Operating elevation	0 to 2000 m (6262 ft) above sea level
Pollution degree	2
Ventilation	No forced ventilation required
Protection against foreign matter and water	IP20 according to EN60529
SUPPLY VOLTAGE	
Nominal range	DC: 24 V, PELV (grounded power supply unit – observe polarity!)
Operating range	±10 % of nominal range
Power consumption	2.5 W
Maximum power consumption with modules and external display	14 W
Recommended overcurrent protective device for line protection	2–6 A, (Char. B), IEC/UL approval

VOLTAGE MEASUREMENT

Three-phase 4-conductor systems with rated voltages up to	277 V_{LN} / 480 V_{LL} (±10 %) according to IEC 277 V_{LN} / 480 V_{LL} (±10 %) according to UL
Three-phase 3-conductor systems (grounded) with rated voltages up to	480 V_{L-L} (±10 %) according to IEC 480 V_{L-L} (±10 %) according to UL
Three-phase 3-conductor systems (ungrounded) with rated voltages up to	480 V_{L-L} (±10 %) according to IEC 480 V_{L-L} (±10 %) according to UL
Overvoltage category	300 V CAT III according to IEC 300 V CAT III according to UL
Rated surge voltage	4 kV
Protection of the voltage measurement	1–10 A tripping characteristic B (with IEC/UL approval)
Measuring range L-N	0[1]–300 V_{eff} (max. overvoltage 520 V_{rms}) The device only measures if a voltage L-N greater than 20 V_{eff} is applied to L1.
Measuring range L-L	0[1]–520 V_{eff} (max. overvoltage 900 V_{rms}) The device only measures if a voltage L-N greater than 34 V_{eff} is applied to L1-L2 or L1-L3.
Measuring range N-PE	0–300 V_{eff}
Resolution	0.01 V
Crest factor	2 (referred to the measuring range)
Impedance	3 MΩ/phase
Power consumption	approx. 0.1 VA
Sampling frequency	51.2 kHz
Frequency of fundamental oscillation – Resolution	40 Hz–70 Hz 0.01 Hz
Harmonics	1–63.

RS485 INTERFACE

3-conductor connection with A, B, GND

Protocol	Modbus RTU/Server (formerly slave) Modbus RTU/Gateway
Transmission rate	9.6 kbps, 19.2 kbps, 38.4 kbps, 57.6 kbps, 115.2 kbps
Termination	DIP switches (S1)

ETHERNET INTERFACES

Connection	2 x RJ45
Function	Modbus Gateway, embedded web server (HTTP)
Protocols	TCP/IP, DHCP client (BootP), Modbus/TCP (Port 502), ICMP (Ping), NTP, FTP

USB INTERFACE

Connection	USB 2.0, Type A
Function	Connection for – external Display. – USB memory stick (FAT32 formatted) with firmware update file and/or configuration file.

CONNECTION CAPACITY OF THE TERMINALS – SUPPLY VOLTAGE
Connectible conductors: Only connect one conductor per terminal point!

Single core, multi-core, fine-stranded	0.2–4 mm², AWG 28-12
Wire ferrules (insulated/non-insulated)	0.2–2,5 mm², AWG 26-14
Tightening torque	0.4–0,5 Nm (3.54–4.43 lbf in)
Strip length	7 mm (0.2756 in)

CONNECTION CAPACITY OF THE TERMINALS – VOLTAGE MEASUREMENT
Connectible conductors: Only connect one conductor per terminal point!

Single core	0.5–1.5 mm², AWG 21-16
Fine-stranded	0.5–2.5 mm², AWG 21-14
Wire ferrules (insulated/non-insulated)	0.5–2.5 mm², AWG 21-14
Strip length	10 mm (0.3937 in)

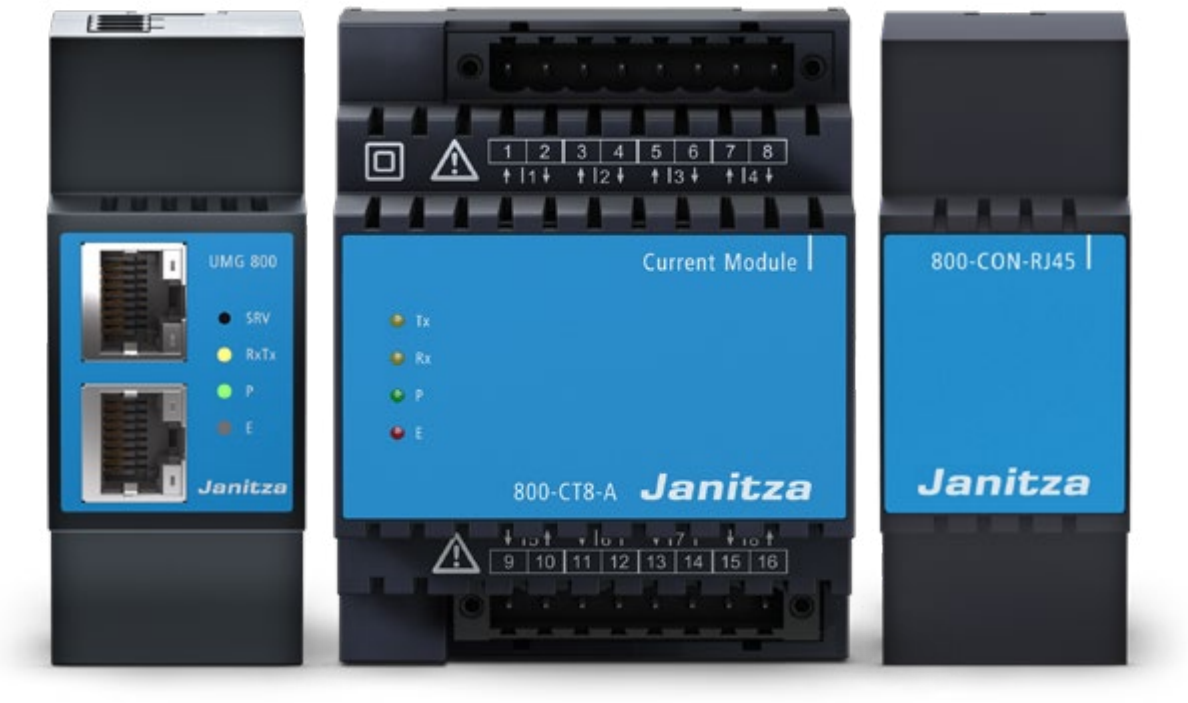

**The suitable modules for the UMG 800 can be found from page 134 onwards*

CONNECTION CAPACITY OF THE TERMINALS – RS485

Single core, multi-core, fine-stranded	0.2–1.5 mm², AWG 28-16
Wire ferrules (insulated/non-insulated)	0.2–1.5 mm², AWG 28-16
Tightening torque	0.2–0.25 Nm (1.77–2.21 lbf in)
Strip length	7 mm (0.2756 in)

POTENTIAL ISOLATION AND ELECTRICAL SAFETY OF THE INTERFACES

The interfaces (RS485, Ethernet und USB) have:
– Double insulation to the voltage measurement inputs.
– A functional insulation to each other, to the supply voltage, to the measuring inputs.
The interfaces of the connected devices require double or reinforced insulation against mains voltages (according to IEC 61010-1).



UMG 801

MODULARLY EXPANDABLE NETWORK ANALYZER

MODULARITY
- Expandable to 92 current measurement channels
- The modules can be mixed modules can be mixed with each other and maximum 10 module slots
- Measuring distance bridging up to 100 m

POWER QUALITY
- Event and transient detection
- Event browser
- Harmonics up to the 127th harmonic

MEASUREMENT DATA MEMORY
- 4 GB device-internal memory/ no factory setting

COMMUNICATION
- Modbus RTU & gateway
- OPC UA
- NTP time synchronization

INTERFACES
- RS-485
- 2 x Ethernet

PERIPHERALS
- 4 digital inputs
- 4 digital outputs
- 1 analog output

MEASURING ACCURACY
- Class 0.2S
- Current: 0.2 %
- Voltage: 0.2 %

MULTIFUNCTION CHANNELS
- Flexible use
- Residual current detection
- Temperature measurement
- Current measurement

RESIDUAL CURRENT DETECTION
- Residual current measurement with open circuit detection

UMG 801

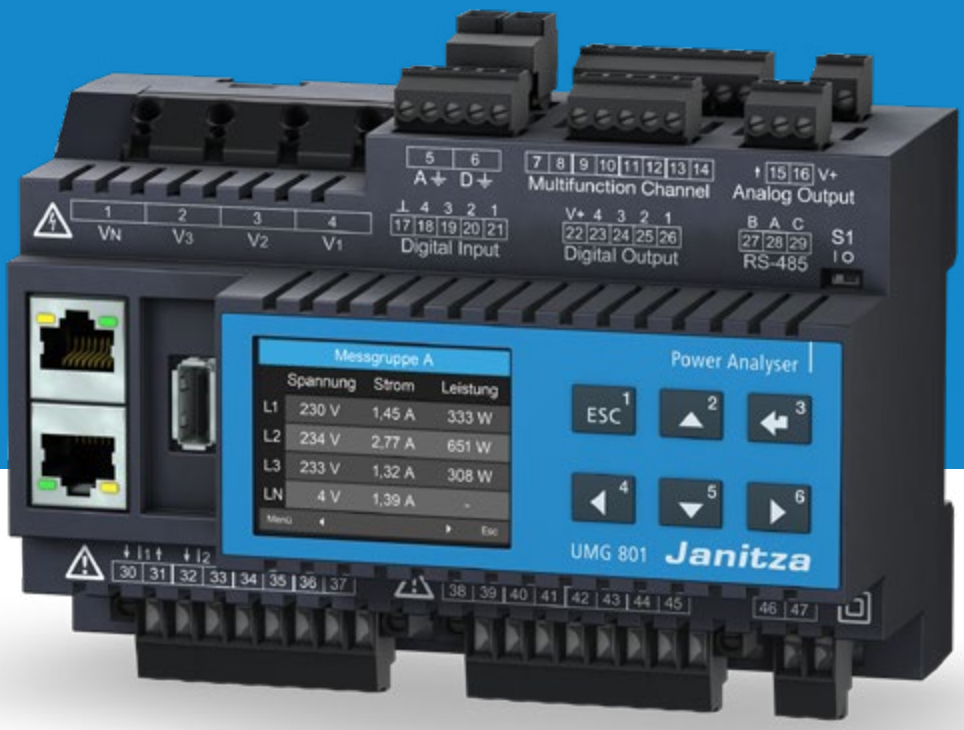

POWER QUALITY

Events and transients for two feeders

MODULAR

Modular expansion to up to 92 current measurement channels

COMMUNICATION

Future-proof communication options with OPC UA

DIMENSIONED DRAWING

All dimensions in mm

Rear view

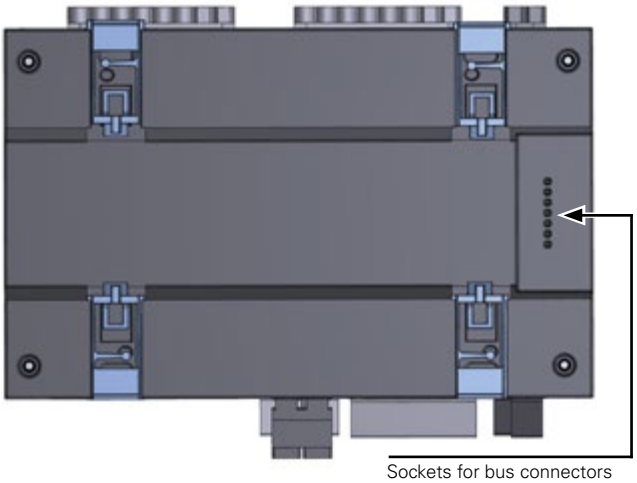

Bus connector

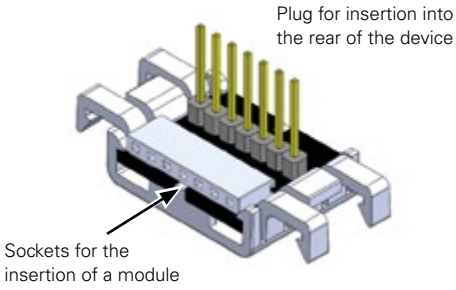

Bottom view

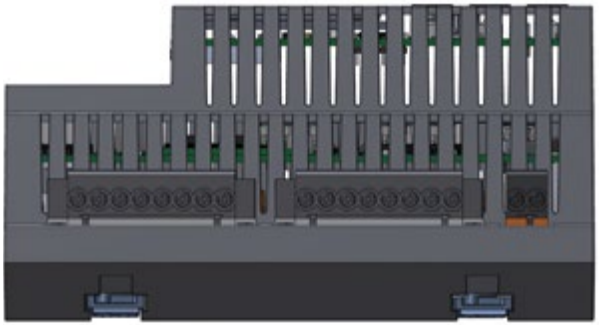

Top view

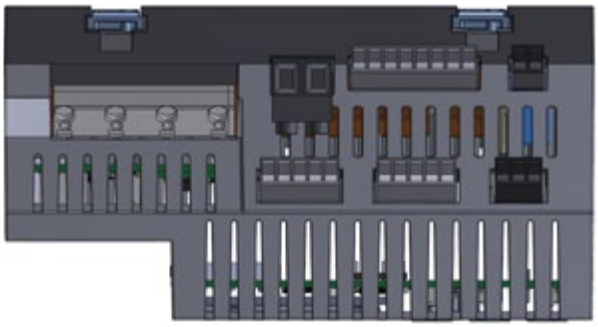

Front view

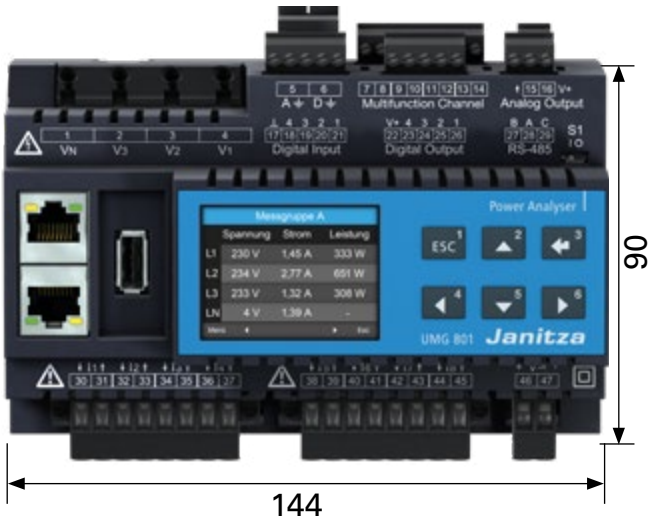

View from left

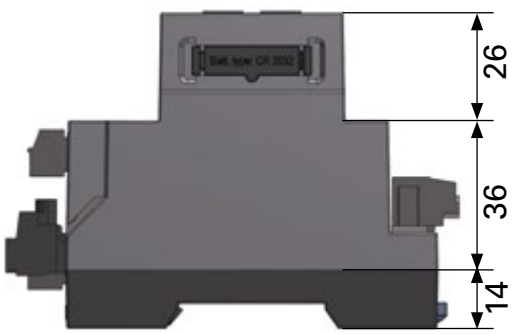

Requires 8 HP (Horizontal pitch)

CONNECTION EXAMPLE

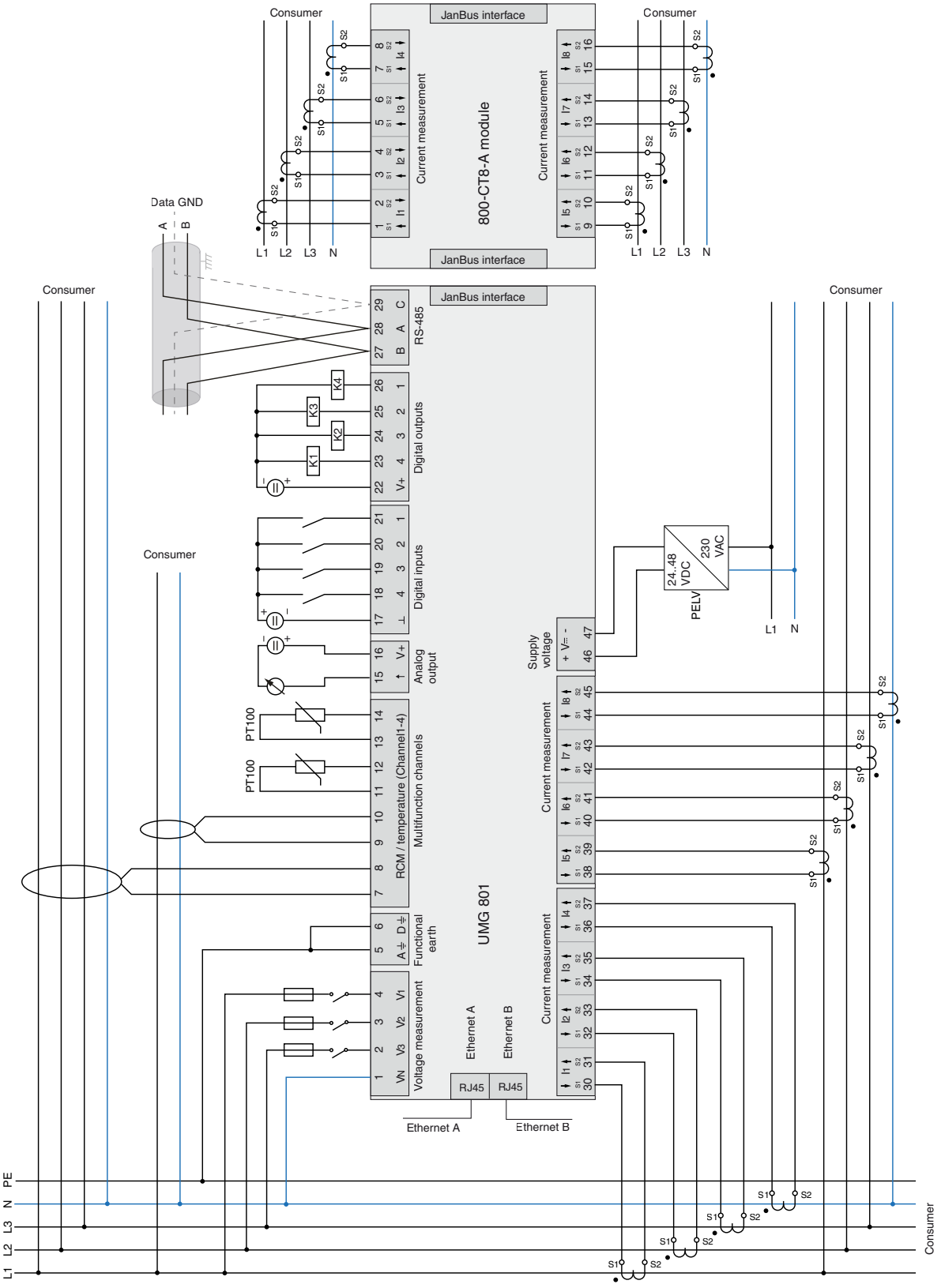

TECHNICAL DATA

UMG 801	
ITEM NO.	**5231003**
GENERAL	
Net weight	420 g (0.93 lb)
Device dimensions (W x H x D)	approx. 144 x 90 x 76 mm (5.67 x 3.54 x 2.99 in)
Width of the device in horizontal pitches	8 HP (1 HP = 18 mm)
Battery	Type: Lithium CR2032, 3 V (UL1642 approval)
Integrated memory	4 GB
Backlight service life	40000 h (50 % of the start brightness)
Mounting orientation	As desired
Fastening/mounting – suitable DIN rails – 35 mm (1.38 in)	TS 35/7.5 according to EN 60715 TS 35/10 TS 35/15 x 1.5
Impact resistance	IK07 according to IEC 62262
TRANSPORT AND STORAGE The following specifications apply for devices transported and stored in the original packaging.	
Free fall	1 m (39.37 in)
Temperature	–25 °C to +70 °C (–13 °F to 158 °F)
Relative humidity	5 to 95 % RH at 25 °C (77 °F), no condensation
ENVIRONMENTAL CONDITIONS DURING OPERATION	
The device: – Is for weather-protected and stationary use. – Fulfills operating conditions according to DIN IEC 60721-3-3. – Has protection class II according to IEC 60536 (VDE 0106, part 1), a ground wire connection is not required!	
Rated temperature range	–10 °C to +55 °C (14 °F to 131 °F)
Relative humidity	5 to 95 % at 25 °C (77 °F), no condensation
Operating elevation/overvoltage category	2000 m (6562 ft) above sea level
	4000 m (6562 ft) above sea level
Pollution degree	2
Ventilation	No forced ventilation required
Protection against foreign matter and water	IP20 according to EN60529
SUPPLY VOLTAGE	
Nominal range	DC: 24 V, PELV
Operating range	±10 % of nominal range
Power consumption	max. 4 W
Maximum power consumption with 10 modules	14 W (UMG 801 at 4 W plus modules: max. 10 W)
Recommended overcurrent protective device for line protection	2–6 A, (Char. B), IEC-/UL approval

VOLTAGE MEASUREMENT

Three-phase 4-conductor systems with rated voltages up to	480 V_{LN} / 830 V_{LL} (±10 %) according to IEC 347 V_{LN} / 600 V_{LL} (±10 %) according to UL
3-phase 3-conductor systems (grounded) with rated voltages up to	830 V_{L-L} (±10 %) according to IEC 600 V_{L-L} (±10 %) according to UL
3-phase 3-conductor systems (non-grounded) with rated voltages up to	690 V_{L-L} (±10 %) according to IEC 600 V_{L-L} (±10 %) according to UL
Overvoltage category up to 2000 m	1000 V CAT III according to IEC 600 V CAT III according to UL 600 V CAT IV according to IEC
Overvoltage category up to 4000 m	600 V CAT III according to IEC
Rated surge voltage	8 kV
Protection of the voltage measurement	1–10 A tripping characteristic B (with IEC/UL approval)
Measuring range L-N	0[1] to 720 V_{rms} (max. overvoltage 1000 V_{rms})
Measuring range L-L	0[1] to 1000 V_{rms} (max. overvoltage 1000 V_{rms})
Measuring range N-PE	up to 100 V
Resolution	16 bit
Crest factor	1.6 (referred to measuring range 600 V L-N)
Impedance	4 MΩ/phase
Power consumption	approx. 0.1 VA
Sampling frequency	51.2 kHz
Frequency of fundamental oscillation – Resolution	40 Hz to 70 Hz 0.01 Hz
Harmonics	1 to 127.

1) The device only measures if at least one voltage measurement input has an L-N voltage of > 10 V_{eff} or an L-L voltage of > 18 V_{eff} present.

CURRENT MEASUREMENT (.../1 A) (.../5 A)

Nominal current	5 A
Channels	8 2 systems – L1, L2, L3, N (optional) Single channels
Measuring range	0.005 to 6 A_{eff}
Crest factor (relative to nominal current)	1.98
Overload for 1 s	120 A (sinusoidal)
Resolution	0.1 mA (color graphic display 0.01 A)
Overvoltage category	300 V CAT II
Rated surge voltage	2.5 kV
Power consumption	approx. 0.2 VA (Ri = 5 mΩ)
Sampling frequency	25.6 kHz
Harmonics	1 to 63th

RESIDUAL CURRENT MEASUREMENT (RCM)

Nominal current	30 mA_{eff}
Measuring range	0 to 40 mA_{eff}
Operating current	50 µA
Resolution	1 µA (color graphic display 0.01 A)
Crest factor	1.414 (relative to 40 mA)
Load	4 Ω
Overload for 20 ms	50 A
Overload for 1 s	5 A
Permanent overload	1 A
Norm	IEC/TR 60755 (2008-01), Type A, Type B and B+ (via corresponding current transformers)

TEMPERATURE MEASUREMENT

Update time		1 s		
Total load (sensor and cable)		max. 4 kΩ		
Cable		Up to 30 m (32.81 yd) not shielded Greater than 30 m (32.81 yd) shielded		
Suitable temperature sensor types		KTY83, KTY84, PT100, PT1000		
Measuring accuracy	**Temperature sensor type**	**Temp. range**	**Resistance range**	**Measurement uncertainty**
	KTY83	–55 °C to +175 °C (–67 °F to +347 °F)	500 Ω to 2,6 kΩ	±1,5 % rng
	KTY84	–40 °C to +300 °C (–40 °F to +572 °F)	350 Ω to 2,6 kΩ	±1,5 % rng
	PT100	–99 °C to +500 °C (–146 °F to +932 °F)	60 Ω to 180 Ω	±1,5 % rng
	PT1000	–99 °C to +500 °C (–146 °F to +932 °F	600 Ω to 1,8 kΩ	±1,5 % rng

DIGITAL INPUTS

4 digital inputs, solid state relays, not short-circuit proof.

Maximum counter frequency	20 Hz
Input signal applied	18 to 28 V DC (typically 4 mA)
Input signal not applied	0 to 5 V DC, current less than 0.5 mA

DIGITAL OUTPUTS

4 digital outputs, solid state relays, not short-circuit proof.

Switching voltage	Max. 60 V DC
Switching current	max. 50 mA_{eff} DC
Response time	approx. 500 ms
Digital output (energy pulses)	max. 20 Hz

CABLE LENGTH (DIGITAL INPUTS/OUTPUTS)

Up to 30 m (32.81 yd)	Unshielded
Greater than 30 m (32.81 yd)	Shielded

ANALOG OUTPUTS

1 channel

External power supply	max. 33 V DC
Current	0/4 to 20 mA DC
Update time	0.2 s
Load	max. 300 Ω
Resolution	10 bit

RS-485 INTERFACE

3-conductor connection with A, B, GND

Protocol	Modbus RTU/Server (formerly slave) Modbus RTU/Gateway
Transmission rate	9.6 kbps, 19.2 kbps, 38.4 kbps, 57.6 kbps, 115.2 kbps
Termination	DIP switches

ETHERNET INTERFACES

Connection	2 x RJ45 (can be used separately)
Function	Modbus gateway
Protocols, services and time synchronization	OPC UA, DHCP, Modbus/TCP, NTP
Time synchronization	NTP
Protocols, services	**Ports**
Modbus/TCP - Modbus/UDP	502 (UDP / TCP), modifiable
DNS (client)	53 (UDP)
DHCP (client)	67 / 68 (UDP)
HTTP	80 (TCP)
NTP	123 (UDP)
SFTP	22 (TCP
OPC-UA (binary)	4840 (TCP)
Device identification (since version 1.3.0)	1111 (UDP)
Error message for events and transients according to	PQDIF (IEEE 1159.3-2019) - file format: pqd. COMTRADE (IEC 60255-24 Edition 2.0 2013-04 and IEEE Std C37.111-2013) - file format: dat, cfg.

CONNECTION CAPACITY OF THE TERMINALS (SUPPLY VOLTAGE)

Connectible conductors. Only connect one conductor per terminal point

Single core, multi-core, fine-stranded	0,2–2,5 mm², AWG 26-12
Wire ferrules (non-insulated) - Recommended strip length	0,2–2,5 mm², AWG 26-12 – 10 mm (0.3937 in)
Wire ferrules (insulated)* Recommended strip length**	0,2–2,5 mm², AWG 26-12 12 mm (≤ 1,5 mm²), 10 mm (> 1,5 mm²)/ 0.47 in (≤ 1,5 mm²), 0.39 in (> 1,5 mm²)
Wire ferrules: Contact sleeve length**	8–12 mm (0.31–0.47 in)

CONNECTION CAPACITY OF THE TERMINALS (CURRENT MEASUREMENT)

Connectible conductors. Only connect one conductor per terminal!

Single core, multi-core, fine-stranded	0,2–2,5 mm², AWG 26-12
Wire ferrules (non-insulated) - Recommended strip length	0,2–2,5 mm², AWG 26-12 – 10 mm (0.3937 in)
Wire ferrules (insulated)* Recommended strip length**	0,2–2,5 mm², AWG 26-12 12 mm (≤ 1,5 mm²), 10 mm (> 1,5 mm²) / 0.47 in (≤ 1,5 mm²), 0.39 in (> 1,5 mm²)
Wire ferrules: Contact sleeve length**	8–12 mm (0.31–0.47 in)

** Applies to wire ferrules with a maximum plastic collar outer diameter of up to 4.5 mm (0.18 in).*
*** Depending on the type of wire ferrules used (wire ferrules manufacturer).*

CONNECTION CAPACITY OF THE TERMINALS (VOLTAGE MEASUREMENT)

Connectible conductors. Only connect one conductor per terminal!

Single core, multi-core, fine-stranded	0.08–4.0 mm², AWG 28-12
Wire ferrules (insulated/non-insulated)	0.25–2.5 mm², AWG 24-14
Strip length	8–9 mm (0.31–0.35 in)

CONNECTION CAPACITY OF THE TERMINALS (FUNCTIONAL EARTH A/D)

Connectible conductors. Only connect one conductor per terminal!

Single core, multi-core, fine-stranded	0.2–4.0 mm², AWG 24-12
Wire ferrules (non-insulated)	0.2–4.0 mm², AWG 24-12
Wire ferrules (insulated)	0.2–2.5 mm², AWG 26-14
Tightening torque	0.4–0.5 Nm (3.54–4.43 lbf in)
Strip length	7 mm (0.28 in)

CONNECTION CAPACITY OF THE TERMINALS – MULTIFUNCTION CHANNELS (RCM, TEMP., mA CURRENT MEASUREMENT)

Connectible conductors. Only connect one conductor per terminal!

Single core, multi-core, fine-stranded	0.2–1.5 mm², AWG 24-16
Wire ferrules (non-insulated)	0.2–1.5 mm², AWG 26-16
Wire ferrules (insulated)	0.2–1 mm², AWG 26-18
Tightening torque	0.2–0.25 Nm (1.77–2.21 lbf in)
Strip length	7 mm (0.28 in)



CONNECTION CAPACITY OF THE TERMINALS (DIGITAL INPUTS/OUTPUTS, ANALOG OUTPUT)	
Single core, multi-core, fine-stranded	0.2–1.5 mm², AWG 24-16
Wire ferrules (non-insulated)	0.2–1.5 mm², AWG 26-16
Wire ferrules (insulated)	0.2–1 mm², AWG 26-18
Tightening torque	0.2–0.25 Nm (1.77–2.21 lbf in)
Strip length	7 mm (0.28 in)

CONNECTION CAPACITY OF THE TERMINALS (RS-485)	
Single core, multi-core, fine-stranded	0.2–1.5 mm², AWG 24-16
Wire ferrules (non-insulated)	0.2–1.5 mm², AWG 26-16
Wire ferrules (insulated)	0.2–1 mm², AWG 26-18
Tightening torque	0.2–0.25 Nm (1.77–2.21 lbf in)
Strip length	7 mm (0.28 in)



MODULAR EXPANSIONS FOR THE UMG 801 MEASUREMENT DEVICE

Module combinations
- The UMG 801 basic unit allows the connection of modules for measuring channel expansion
- The modules can be combined with each other
- The number of modules that can be connected is limited to 10 capacity units (so-called module slots)
- With the help of the corresponding modules, the basic unit can be expanded to up to 92 current measuring channels or 144 digital inputs

Possible connections of the modules
- 4 x 800-DI14 + 6 x 800-CT8-A + 2 x 800-CON = 10 module slots
- 3 x 800-CT8-A + 7 x 800-DI14 = 10 module slots
- 5 x 800-CT8-A = 5 module slots

800-CON module
- Uses 0 module slot
- Measuring distance bridging up to 100 m
- Simple connection via plug & play
- Optimal use of available space

800-CON-RJ45 module
- Uses 0 module slot
- Has an RJ45 interface and can be connected with a standardized cable
- Measuring distance bridging up to 100 m

800-CT8-A module
- Uses 1 module slot
- Easy connection thanks to plug & play
- Expand to up to 92 current measurement channels
- Compact design



MODULAR EXPANSIONS FOR THE UMG 801 MEASUREMENT DEVICE

800-CT8-LP module
- Uses 1 module slot
- Connection of up to 8 Low-Power current transformers per module
- Space and cost savings

800-DI14 module
- Uses 1 module slot
- Expansion by up to 144 digital inputs
- Compact 1 TE design
- Accommodates, for example, door contacts, fans or switch positions for visualisation in GridVis® or third-party systems
- Simple connection thanks to Plug & Play

800 CT-24 module
- Extends the functional range of a basic device by 24 additional current measuring channels.
- Is suitable for low-power current transformers with a secondary voltage of 0 to 333 mV.
- Has an input and output for integration into a Jan-Bus topology with a basic device. The 800-CT24 module requires at least one 800-CON-RJ45 module for this purpose!

RD 96
- Uses 0 module slot
- Remote display
- Operation of the UMG 801 and all modules via front panel
- Fast & easy connection



800-CT8-A module: 72 mm x 90 mm x 76 mm*

* Dimensions: Width x height x depth

DIMENSIONED DRAWING

All dimensions in mm

Front view

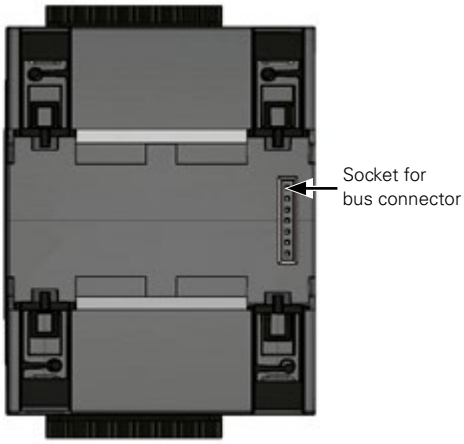

Side view

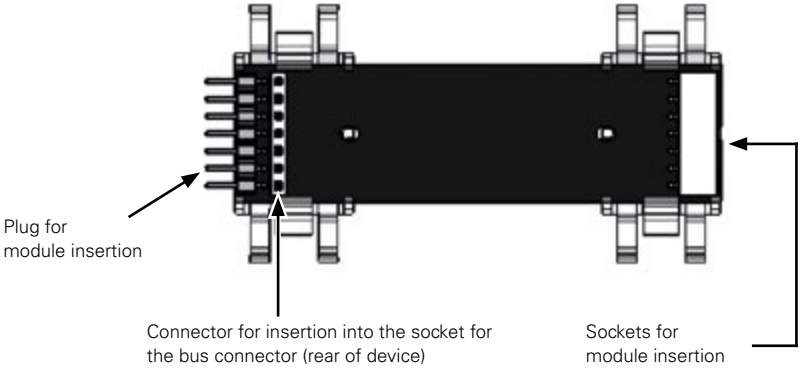

Bottom view



Top view

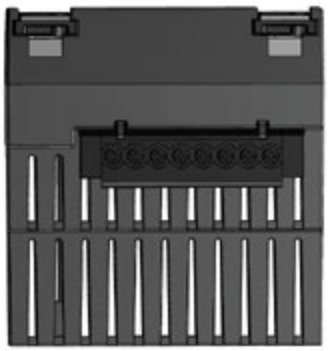

Front view

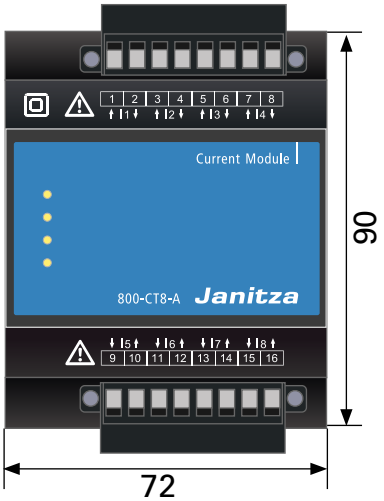

View from left

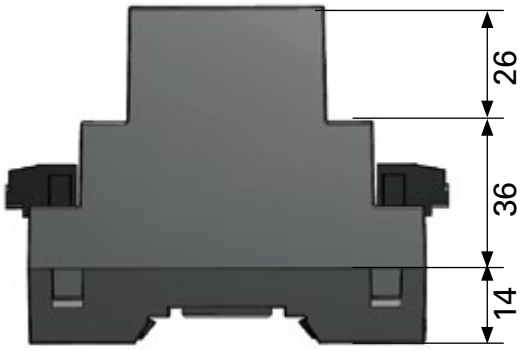

Requires 4 HP (Horizontal pitch)

TECHNICAL DATA

800-CT8-A MODULE	
ITEM NO.	**5231230**
GENERAL	
Net weight	220 g (0.49 lbs)
Device dimensions (W x H x D)	72 x 90 x 76 mm (2.83 x 3.54 x 2.99 in)
Width of the device in horizontal pitches	4 HP (1 HP = 18 mm)
Mounting orientation	As desired
Fastening/mounting – suitable DIN rails (35 mm/1.38 in)	TS 35/7.5 according to EN 60715; TS 35/10; TS 35/15 x 1.5
Protection against foreign matter and water	IP20 according to EN60529
Impact resistance	IK07 according to IEC 62262
TRANSPORT AND STORAGE The following specifications apply for devices transported and stored in the original packaging	
Free fall	1 m (39.37 in)
Temperature	K55: –25° C to +70° C (–13 °F to 158 °F)
Relative humidity	5 to 95 % at 25 °C (77 °F), no condensation
ENVIRONMENT CONDITIONS DURING OPERATION	
The module – Must only be operated with suitable basic devices (see the user manual for the module). – Is for weather-protected and stationary use. – Fulfills operating conditions according to DIN IEC 60721-3-3. – Has protection class II according to IEC 60536 (VDE 0106, part 1), a ground wire connection is not required!	
Working temperature	–10 °C to +55 °C (14 °F to 131 °F)
Relative humidity	5 to 95% at 25 °C (77 °F), no condensation
Pollution degree	2
Ventilation	No forced ventilation required
Supply voltage	Via basic device
CURRENT MEASURING MODULE 800-CT8-A	
Nominal current	5 A
Channels	8 (2x4); 2 systems (L1, L2, L3, N); Single channels
Measuring range	0.005 to 6 A
Crest factor	2 (relative to 6 A_{eff})
Overload for 1 s	120 A (sinusoidal)
Resolution	0.1 mA (color graphic display 0.01 A)
Overvoltage category	300 V CAT II
Rated surge voltage	2.5 kV
Power consumption	approx. 0.2 VA (Ri = 5 mΩ)
Sampling frequency	8.3 kHz
Frequency of the fundamental oscillation	40 Hz to 70 Hz
Harmonics	1 to 25 (odd only)
INTERFACE AND ENERGY SUPPLY	
JanBus (proprietary)	Via bus connector
Supply voltage (via JanBus interface)	24 V
CONNECTION CAPACITY OF THE TEMRINALS – SPRING TERMINALS Connectible conductors. Only connect one conductor per terminal point!	
Single core, multi-core, fine-stranded	0.2–2.5 mm², AWG 26-12
Wire ferrules (non-insulated) – recommended strip length	0.2–2.5 mm², AWG 26-12 – 10 mm (0.3937 in)
Wire ferrules (insulated)* – recommended strip length**	0.2–2.5 mm², AWG 26-12 12 mm (≤ 1,5 mm²), 10 mm (> 1,5 mm²) 0,47 in (≤ 1,5 mm²), 0,39 in (> 1,5 mm²)
Wire ferrules: Contact sleeve length**	8–12 mm (0.31–0.47 in)
Screw flange tightening torque	0.2 Nm (1.7 lbf in)

** Applies to wire ferrules with a maximum plastic collar outer diameter of up to 4.5 mm (0.18 in).*
*** Depending on the type of wire ferrules used (wire ferrules manufacturer).*

DIMENSIONAL DRAWING

All dimensions in mm

Rear view

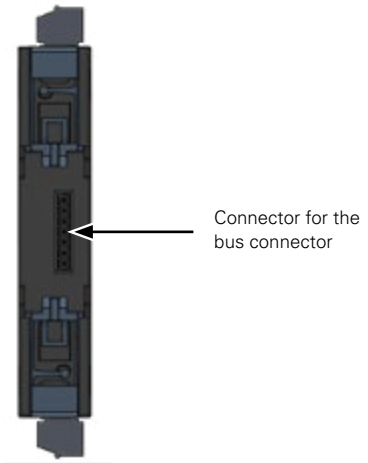

Bottom view



Top view



Communication bus connector to the 800-CT8-LP module

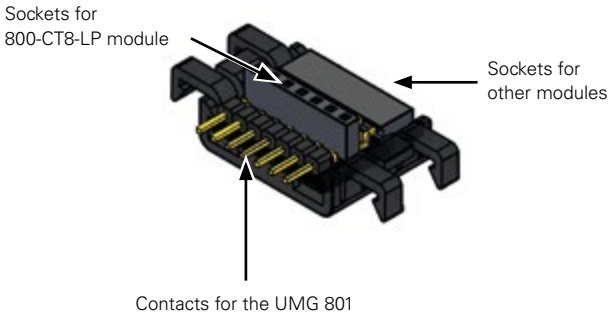

Front view

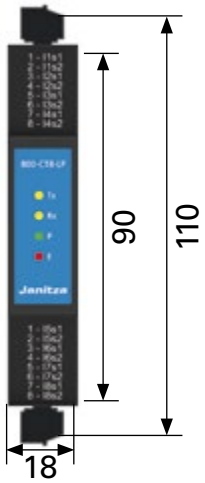

View from left

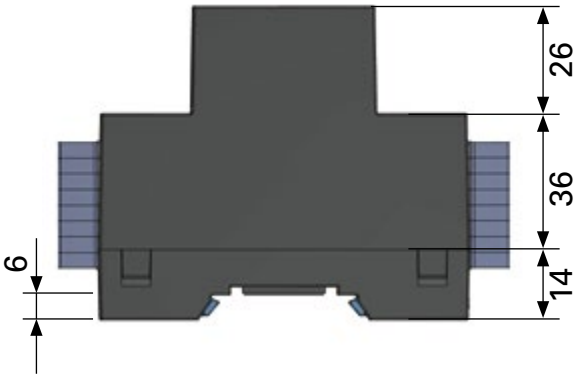

Requires 1 HP (Horizontal pitch)

TECHNICAL DATA

800-CT8-LP MODULE	
ITEM NO.	**5231234**
GENERAL	
Net weight (with terminals)	approx. 73 g (0.16 lb)
Device dimensions without connection terminals (W x H x D)	18 x 90 x 76 mm (0.71 x 3.54 x 2.99 in)
Width of the device in horizontal pitches	1 HP (1 HP = 18 mm/0.71 in)
Mounting orientation	As desired
Fastening/mounting – Suitable DIN rails (35 mm/1.38 in)	TS 35/7.5 according to EN 60715 TS 35/10 TS 35/15 x 1.5
Protection against foreign matter and water	IP20 according to EN60529
Impact resistance	IK07 according to IEC 62262
TRANSPORT AND STORAGE The following specifications apply for devices transported and stored in the original packaging	
Free fall	1 m (39.37 in)
Temperature	K55: –25 °C to +70 °C (–13 °F to 158 °F)
Relative humidity	0 to 95 % at 25 °C (77 °F), no condensation
ENVIRONMENTAL CONDITIONS DURING OPERATION	
The module – Must only be operated with suitable basic devices (see the user manual for the module). – Is for weather-protected and stationary use. – Fulfills operating conditions according to DIN IEC 60721-3-3. – Has protection class II according to IEC 60536 (VDE 0106, part 1), a ground wire connection is not required!	
Working temperature	–10 °C to +55 °C (14 °F to 131 °F)
Relative humidity	5 to 95 % at 25 °C (77 °F), no condensation
Pollution degree	2
Ventilation	No forced ventilation required
Supply voltage	Via basic device
CURRENT MEASUREMENT	
Measurement via low-power current transformers with a secondary voltage of	0–400 mV
Channels	8 (2x4) 2 systems –L1, L2, L3, N Single channels
Input impedance per channel	230 kΩ
Nominal input signal of the module	0 to 400 mV
Crest factor	1.8
Overload for 1 s	1 V
Resolution	16 bit
Sampling frequency	6.8 kHz
Frequency of the fundamental oscillation	40 Hz to 70 Hz
Harmonics	1 to 15 (odd only)
INTERFACE AND ENERGY SUPPLY	
JanBus (proprietary)	Via bus connector
Supply voltage (via JanBus interface)	24 V
CONNECTION CAPACITY OF THE TERMINALS – SPRING TERMINALS (PUSH-IN TERMINALS) Connectible conductors. Only connect one conductor per terminal point!	
Single core, multi-core, fine-stranded (min.–max.)	0.14–1.5 mm², AWG 26-16
Wire ferrules with collar* to DIN 46 228/4, (min.–max.)	0.25–1 mm², AWG 22-17
Wire ferrules without collar* to DIN 46 228/1, (min.–max.)	0.25–1.5 mm², AWG 22-16
Wire ferrules: Contact sleeve length** / Strip length	8–12 mm (0.31–0.47 in) / 10–12 mm (0.39–0.47 in)

** Applies to wire ferrules with a maximum plastic collar outer diameter of up to 4.5 mm (0.18 in).*
*** Depending on the type of wire ferrules used (wire ferrules manufacturer).*

DIMENSIONED DRAWING

All dimensions in mm

Rear view

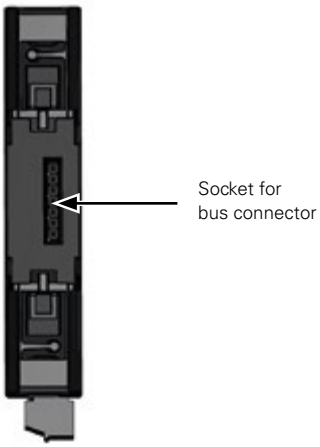

Bus connector for transfer module – Output

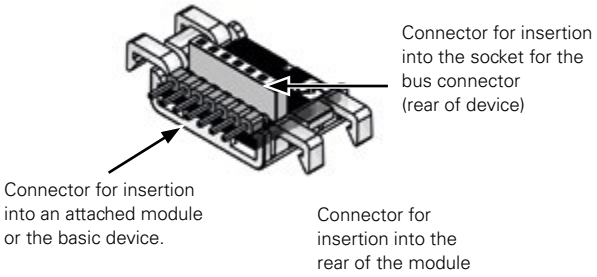

Bottom view



Top view



Bus connector for transfer module - Input

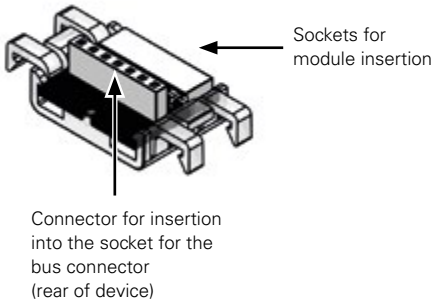

Front view

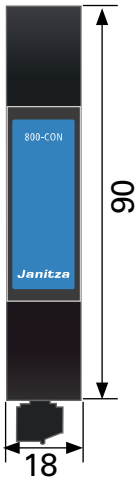

View from left

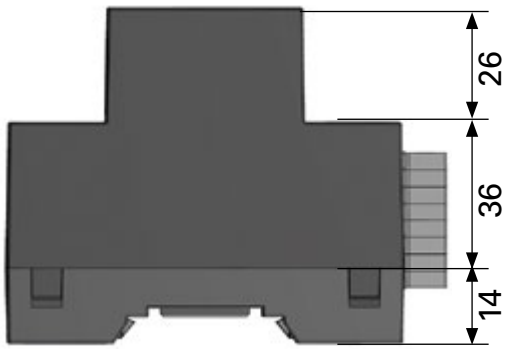

Requires 1 HP (Horizontal pitch)

TECHNICAL DATA

800-CON MODULE	
ITEM NO.	**5231210**
GENERAL	
Net weight (with plug-in terminals)	approx. 55 g (0.12 lbs) – 1 device
Device dimensions (W x H x D)	approx. 18 x 90 x 76 mm (0.71 x 3.54 x 2.99 in)
Width of the modules (set of 2) in horizontal pitches (HP)	1 HP each (1 HP = 18 mm)
Mounting orientation	As desired
Fastening/mounting – suitable DIN rails (35 mm/1.38 in)	TS 35/7.5 according to EN 60715 TS 35/10 TS 35/15 x 1.5
Protection class	IP20
Operating temperature	–10° C to +55° C (14 °F …to 131 °F)
Impact resistance	IK07 according to IEC 62262
TRANSPORT AND STORAGE The following specifications apply for devices transported and stored in the original packaging	
Free fall	1 m (39.37 in)
Temperature	K55: –25° C to +70° C (–13 °F to 158 °F)
Relative humidity	5 to 95 % at 25 °C (77 °F), no condensation
ENVIRONMENTAL CONDITIONS DURING OPERATION	
The modules (set of 2) – Must only be operated with suitable basic devices (see the user manual for the module). – Are for weather-protected and stationary use. – Fulfill operating conditions according to DIN IEC 60721-3-3. – Have protection class II according to IEC 60536 (VDE 0106, part 1), a ground wire connection is not required!	
Rated temperature range	–10 °C to +55 °C (14 °F to 131 °F)
Relative humidity	5 to 95% at 25 °C (77 °F), no condensation
Pollution degree	2
Ventilation	No forced ventilation required
Protection against foreign matter and water	IP20 according to EN60529
INTERFACE	
JanBus (proprietary) **NOTE!** To connect the transfer modules, use a twisted pair, stranded, shielded data cable (cable connection 1:1)!	– Via bus connector to device and module series – Via shield terminals between the transfer modules with stranded twisted pair, shielded data cable (cable connection 1:1) – The maximum bus length of the JanBus is **100 m**.
TERMINAL CONNECTION CAPACITY Connectible conductors. Only connect one conductor per terminal!	
Single core, multi-core, fine-stranded	0.2–1.5 mm², AWG 24-16
Cable end sleeve (non-insulated)	0.2–1.5 mm², AWG 26-16
Cable end sleeve (insulated)	0.2–1 mm², AWG 26-18
Tightening torque	0.2–0.25 Nm (1.77–2.21 lbf in)
Strip length	7 mm (0.2756 in)

DIMENSIONED DRAWING

All dimensions in mm

Front view



View from left

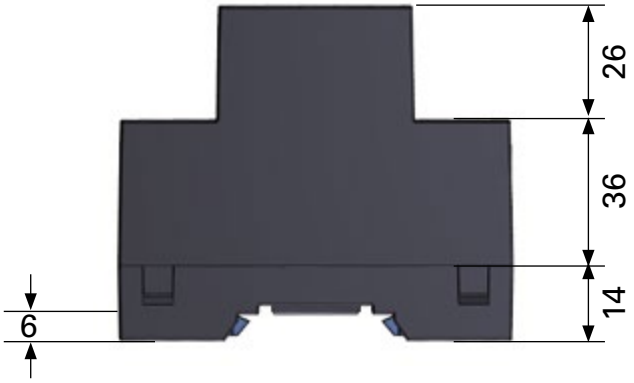

Bottom view



Top view



Rear view

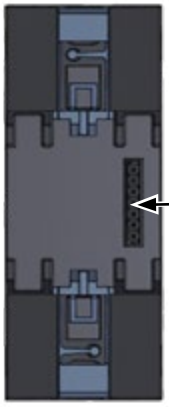

Bus connector (JanBus interface)

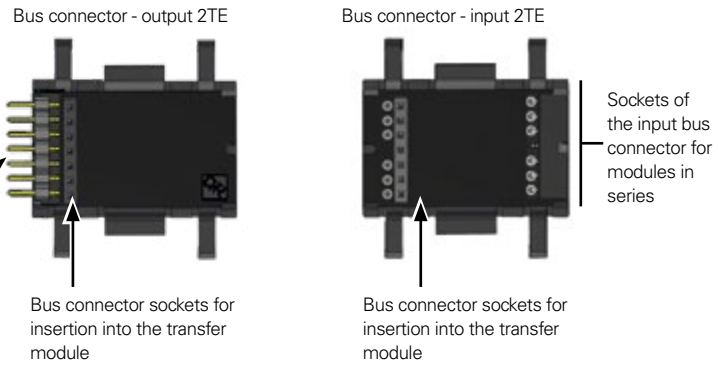

Requires 2 HP (Horizontal pitch)

TECHNICAL DATA

800-CON-RJ45 MODULE	
ITEM NO.	**5231242**
GENERAL	
Net weight	approx. 62 g (0.14 lbs)
Device dimensions (W x H x D)	approx. 36 x 90 x 76 mm (1.42 x 3.54 x 2.99 in)
Width of the device in horizontal pitches (HP)	2 HP (1 HP = 18 mm)
Mounting orientation	As desired
Fastening/mounting – suitable DIN rails (35 mm/1.38 in)	TS 35/7,5 according to EN 60715 TS 35/10 TS 35/15 x 1.5
Protection against foreign matter and water	IP20 according to EN60529
Impact resistance	IK07 according to IEC 62262
TRANSPORT AND STORAGE The following information applies to devices, modules and components transported and stored in their original packaging	
Free fall	1 m (39.37 in)
Temperature	K55: –25 °C to +70 °C (–13 °F to 158 °F)
Relative humidity	0 to 95 % at 25 °C (77 °F), no condensation
ENVIRONMENTAL CONDITIONS DURING OPERATION	
The device: – Is for weather-protected and stationary use. – Fulfills the operating conditions according to DIN IEC 60721-3-3. – Has protection class II according to IEC 60536 (VDE 0106, part 1), a ground wire connection is not required!	
Related temperature range	–10 °C to +55 °C (14 °F to 131 °F)
Relative humidity	5 to 95 % at 25 °C (77 °F), no condensation
Pollution degree	2
Ventilation	No forced ventilation required
INTERFACES	
JanBus interface (In) - (proprietary Ethernet)	RJ45 - JanBus interface via bus connector
JanBus-Schnittstelle (Out) - (proprietary Ethernet)	RJ45 - JanBus via RJ45 cable (RJ45 patch cable)
JanBus (proprietary) - Max. bus lengths/cable lengths of the RJ45 cables	Cat 7/7a = 100 m (AWG 22: Ø = 0,64 mm, cross-sectional area = 0,33 mm²) Cat 6/6a = 75 m (AWG 23: Ø = 0,57 mm, cross-sectional area = 0,26 mm²) Cat 5/5e = 60 m (AWG 24: Ø = 0,51 mm, cross-sectional area = 0,21 mm²)

DIMENSIONED DRAWING

All dimensions in mm

Rear view

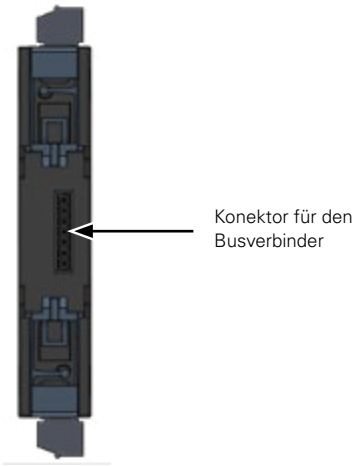

Bottom view



Top view



Communication bus connector to module 800-DI14

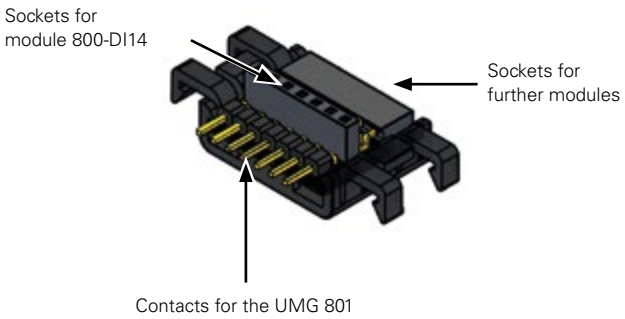

Front view

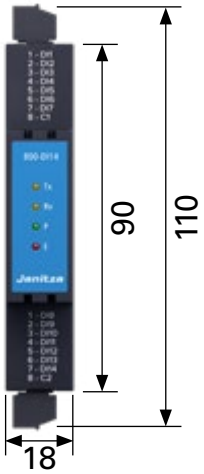

View from left

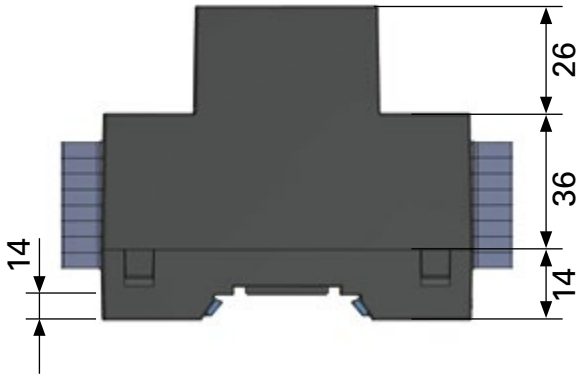

Requires 1 HP (Horizontal pitch)

TECHNICAL DATA

800-DI14 MODULE	
ITEM NO.	**5231214**
GENERAL	
Net weight (with terminals)	73 g (0.16 lb)
Device dimensions without connection terminals (W x H x D)	18 x 90 x 76 mm (0.71 x 3.54 x 2.99 in)
Width of the device in horizontal pitches	1 HP (1 HP = 18 mm)
Mounting orientation	As desired
Fastening/mounting – suitable DIN rails (35 mm/1.38 in)	TS 35/7,5 according to EN 60715 TS 35/10 TS 35/15 x 1.5
Protection against foreign bodies and water	IP20 according to EN60529
Impact resistance	IK07 according to IEC 62262
TRANSPORT AND STORAGE The following specifications apply for devices transported and stored in the original packaging	
Free fall	1 m (39.37 in)
Temperature	K55: –25 °C to +70 °C (–13 °F to 158 °F)
Relative humidity	0 to 95 % at 25 °C (77 °F), no condensation
ENVIRONMENTAL CONDITIONS DURING OPERATION	
The module – Must only be operated with suitable basic devices (see the user manual for the module). – Is for weather-protected and stationary use. – Fulfills operating conditions according to DIN IEC 60721-3-3. – Has protection class II according to IEC 60536 (VDE 0106, part 1), a ground wire connection is not required!	
Working temperature	–10 °C to +55 °C (14 °F to 131 °F)
Relative humidity	5 to 95 % at 25 °C (77 °F), no condensation
Pollution degree	2
Ventilation	No forced ventilation required
Supply voltage	Via basic device
DIGITAL INPUTS 14 digital inputs, solid state relays, not short-circuit proof	
Maximum counter frequency	20 Hz
Input signal applied	18 to 28 V DC (typically 4 mA)
Input signal not applied	0 to 5 V DC, current less than 0,5 mA
INTERFACE AND ENERGY SUPPLY	
JanBus (proorietary)	Via bus connector Max. length (JanBus) 100 m
Supply voltage (via JanBus interface)	24 V
CONNECTION CAPACITY OF THE TERMINALS – SPRING TERMINALS (PUSH-IN TERMINALS) Connectible conductors. Only connect one conductor per terminal point!	
Single core, multi-core, fine-stranded (min.–max.)	0.14 mm^2–1.5 mm^2, AWG 26-16
Wire ferrules with collar* to DIN 46 228/4, (min.–max.)	0.25–1 mm^2, AWG 22-17
Wire ferrules without collar to DIN 46 228/1, (min.–max.)	0.25–1.5 mm^2, AWG 22-16
Wire ferrules: Contact sleeve length** Strip length	 8–12 mm (0.31–0.47 in) 10–12 mm (0.39–0.47 in

** Applies to wire ferrules with a maximum plastic collar outer diameter of up to 3.5 mm (0.14 in).*
*** Depending on the type of wire ferrules used (wire ferrules manufacturer).*

DIMENSIONED DRAWING

All dimensions in mm

Side view

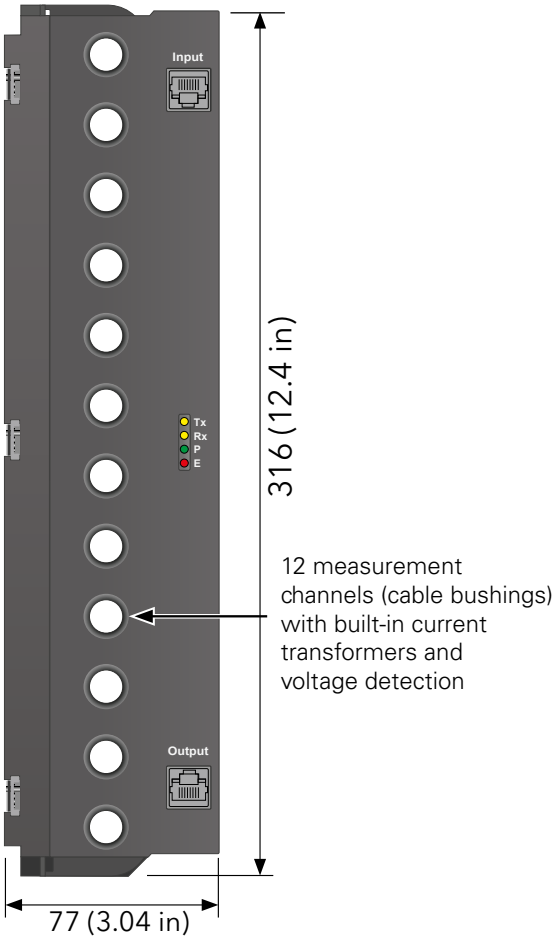

Top view



Bottom view

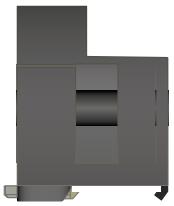

TECHNICAL DATA

800-CT12-SVD-US MODULE	
ITEM NO.	**5231301**
GENERAL	
Net weight approx.	880 g (1.94 lbs)
Device dimensions (W x H x D)	316 x 60 x 77 mm (12.45 x 2.37 x 3.04 in)
Grid dimension of the measurement channels (cable bushings)	25.4 mm (1.0 in)
Mounting orientation	As desired
Fastening/mounting – suitable DIN rails (35 mm/1.38 in)	TS 35/7.5 according to EN 60715 TS 35/10 TS 35/15 x 1.5
Protection against foreign bodies and water	IP20 according to EN60529
Impact resistance	IK07 according to IEC 62262
TRANSPORT AND STORAGE The following specifications apply for devices transported and stored in the original packaging	
Free fall	1 m (39.37 in)
Temperature	–25 °C to +70 °C (–13 °F to 158 °F)
Relative humidity	0 to 95 % without condensation

ENVIRONMENTAL CONDITIONS DURING OPERATION

The module:
– Must only be operated with suitable basic devices (see the user manual for the module).
– Is for weather-protected and stationary use.
– Fulfills the operating conditions according to IEC 61000-4-30, IEC 60721-3-3.
– Has protection class II according to IEC 60536 (VDE 0106, part 1), a ground wire connection is not required

Working temperature	–10 °C to +55 °C (14 °F to 131 °F)
Relative humidity	5 to 95 % at 25 °C (77 °F) no condensation
Pollution degree	2
Ventilation	No forced ventilation required

CURRENT MEASUREMENT

Nominal current	100 A (120 A continuous overload)
Channels	12 (3x4) 3 systems – L1, L2, L3, N or 12 individual channels[1)] Virtual meter for configuration as needed, e.g. L1, L2, L3
Measuring range	1–120 A (eff)
Crest factor	1.5 (relative to nominal current)
Overload for 1 s	500 A (sinusoidal)
Resolution	0.1 A
Sampling frequency	6.8 kHz
Overvoltage category	300 V CAT III
Rated surge voltage	4 kV
Accuracy class	Current: 0.2 / Power: 0.5 s
Harmonics	1.–15. (odd only)

1) Physical measurement groups are only possible with a UMG 801 as a basic device. The UMG 800 always uses Virtual Meter with predefined or freely definable measurement groups.

VOLTAGE DETECTION

3-phase-4-conductor systems with rated voltages up to	277 V_{LN} / 480 V_{LL} (±10 %) according to IEC/UL
Overvoltage category (up to 2000 m)	300 V CAT III according to IEC/UL
Rated surge voltage	4 kV
Measuring range L-PE	0–300 V_{rms}
Sampling frequency	6,8 kHz

CABLE BUSHING

Line type		Single-core, insulated cable (basic insulation according to UL/CSA 61010)			
Outer diameter		Up to 11 mm			
Wire size		Load capacity in A at a permissible continuous temperature of 75 °C (167 °F) on the conductor depending on the Ambient temperature			
AWG	mm²	≤ 30°C / 86°F	≤ 35°C / 95°F	≤ 45°C / 113°F	≤ 55°C / 131°F
14	2.07	30	28	25	20
12	3.29	35	33	29	23
10	5.26	50	47	41	34
8	8.38	70	66	57	47
6	13.32	95	89	78	64
4	21.09	100	100	100	84
2	33.63	-	-	-	100

INTERFACE AND ENERGY SUPPLY

RJ45 interface (In/Out)	JanBus (proprietary) via RJ45 patch cable
Supply voltage	24 V via JanBus interface
JanBus (proprietary) - Max. bus lengths/cable lengths of the RJ45 cables (use shielded RJ45 cables as of 30 m)	Cat 7/7a = 100 m (109.36 yd) (AWG 22: Ø = 0.64 mm, cross-sectional area = 0.33 mm²)
	Cat 6/6a = 75 m (82.02 yd) (AWG 23: Ø = 0.57 mm, cross-sectional area = 0.26 mm²)
	Cat 5/5e = 60 m (65.62 yd) (AWG 24: Ø = 0.51 mm, cross-sectional area = 0.21 mm²)
Power consumption	max. 1 W

DIMENSIONED DRAWING

All dimensions in mm

Rear view

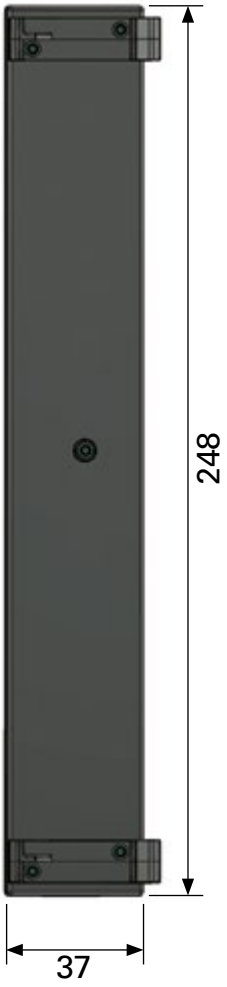

Front view

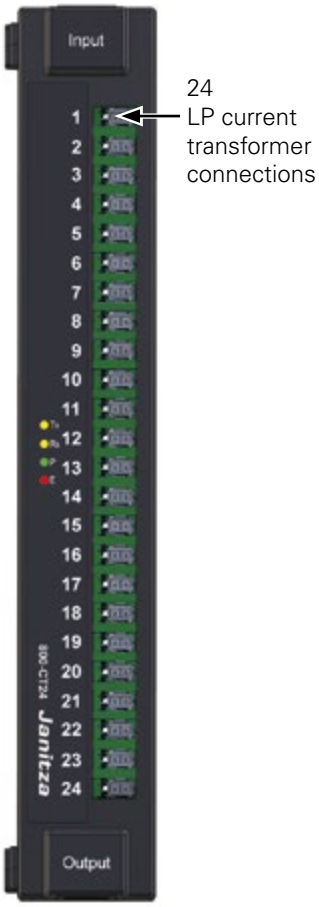

View from left



Bottom view



Output side
(on DIN rail)

Top view

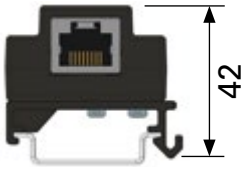

Input side
(on DIN rail)

TECHNICAL DATA

800-CT24 MODULE	
ITEM NO.	**5231247**
GENERAL	
Net weight	120 g (0.26 lb)
Device dimensions (B x H x T)	248 x 42 x 37 mm (9.76 x 1.65 x 1.46 in)
Mounting orientation	As desired
Fastening/mounting – suitable DIN rails (35 mm/1.38 in)	TS 35/7,5 nach EN 60715 TS 35/10 TS 35/15 x 1.5
Protection against foreign matter and water	IP20 according to EN60529
Impact resistance	IK07 according to IEC 62262
TRANSPORT AND STORAGE The following specifications apply for devices transported and stored in the original packaging.	
Free fall	1 m (39.37 in)
Temperature	K55: –25 °C to +70 °C (–13 °F to 158 °F)
Relative humidity	0 to 95 % at 25 °C (77 °F), no condensation
ENVIRONMENTAL CONDITIONS DURING OPERATION	
The module – Must only be operated with suitable basic devices (see the user manual for the module). – Is for weather-protected and stationary use. – Fulfills operating conditions according to DIN IEC 60721-3-3. – Has protection class II according to IEC 60536 (VDE 0106, part 1), a ground wire connection is not required	
Working temperature	–10 °C to +55 °C (14 °F to 131 °F)
Relative humidity	5 to 95 % at 25 °C (77 °F), no condensation
Pollution degree	2
Ventilation	No forced ventilation required
CURRENT MEASUREMENT	
Rated voltage for the LP current transformers	333 mV
Channels	24
Measuring range	0–400 mV
Crest factor	1.8
Overload for 1 s	1 V
Resolution	16 Bit
Sampling frequency	6.8 kHz
Frequency of the fundamental oscillation	40 Hz–70 Hz
Harmonics	1.–15. (odd only)
INTERFACE AND ENERGY SUPPLY	
RJ45 interface (In/Out)	JanBus (proprietary) via RJ45 cable (RJ45 patch cable).
Supply voltage (via JanBus interface)	24 V
JanBus (proprietary) - Max. bus lengths/cable lengths of the RJ45 cables	Cat 7/7a = 100 m (109.36 yd) (AWG 22: Ø = 0.64 mm, cross-sectional area = 0.33 mm²)
	Cat 6/6a = 75 m (82.02 yd) (AWG 23: Ø = 0.57 mm, cross-sectional area = 0.26 mm²)
	Cat 5/5e = 60 m (65.62 yd) (AWG 24: Ø = 0.51 mm, cross-sectional area = 0.21 mm²)
Current sensor/LP current transformer interface	Micro Mate-N-Lok connector

DIMENSIONED DRAWING

Front view

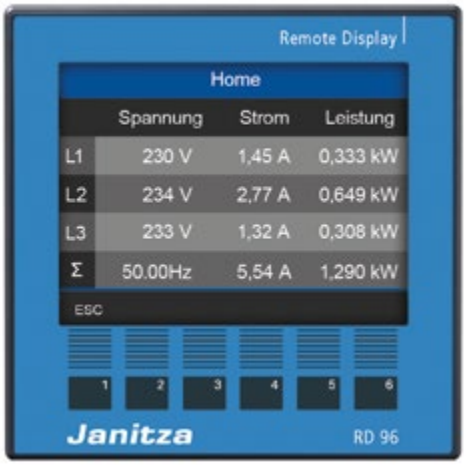

Side view

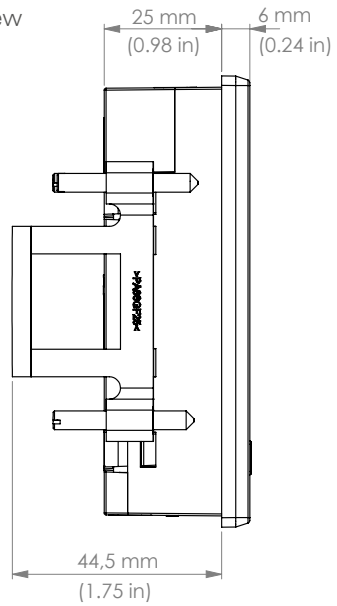

Front view

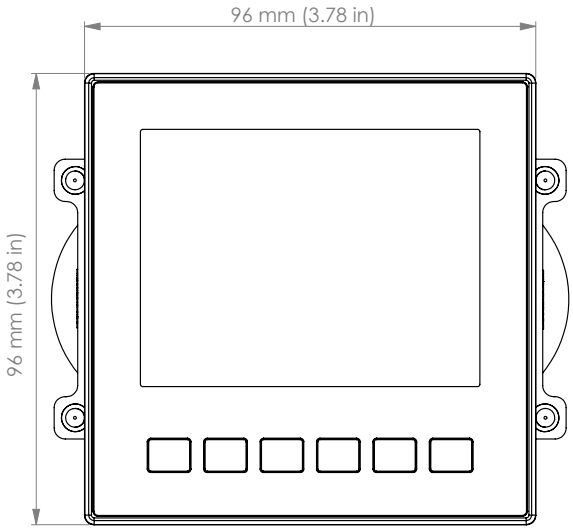

Rear view

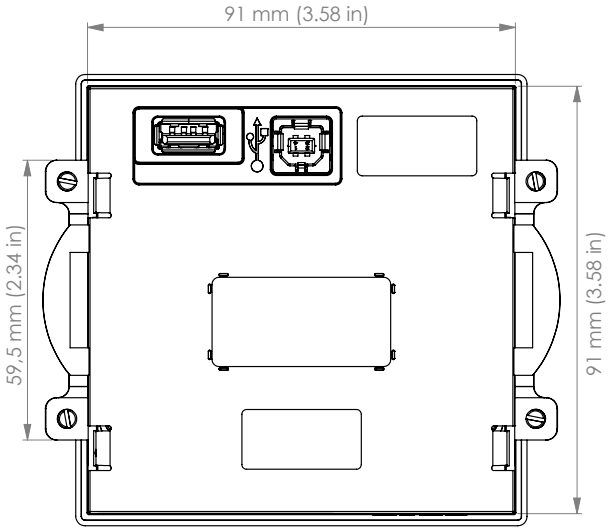

Top view

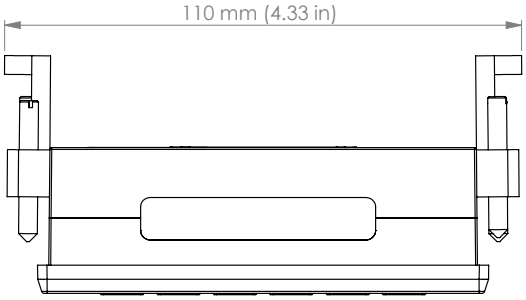

Bottom view

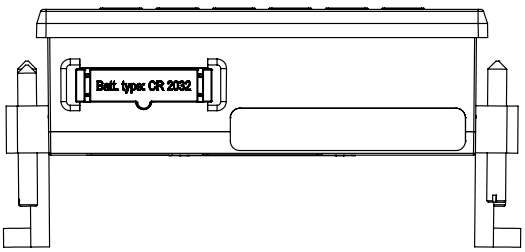

TECHNICAL DATA

RD 96	
ITEM NO.	**5231212**
GENERAL	
Net weight	approx. 140 g (0.31 lbs)
Package weight (incl. accessories)	approx. 440 g (0.97 lbs)
Dimensions W x H x D without mounting clamps	96 mm x 96 mm x 30 mm (3.78 in x 3.78 in x 1.18 in)
Backlight service life	40000 h (after 40000 h the backlight goes down to approx. 50 %)
Impact resistance	IK07 according to IEC 62262
SERIAL INTERFACE (USB)	
USB 2.0 (type A)	1x
USB 2.0 (type B)	1x
Supply voltage	DC 5 V
Nominal current	200 mA
Operating range	±5 % of nominal range
Power consumption	1 W
TRANSPORT AND STORAGE The following specifications apply for devices transported and stored in the original packaging.	
Free fall	1 m (39.37 in)
Temperature	–25° C to +70° C (–13 °F to 158 °F)
Relative air humidity (non-condensing)	0 to 90 % RH
ENVIRONMENTAL CONDITIONS DURING OPERATION	
Install the device in a weather-protected and stationary location. Protection class II according to IEC 60536 (VDE 0106, Part 1)	
Rated temperature range	–10 °C to +55 °C (14 °F to 131 °F)
Relative air humidity (non-condensing)	0 to 75 % RH
Operating elevation	0–2000 m (6562 ft) above sea level
Pollution degree	2
Mounting orientation	As desired
Ventilation	No forced ventilation required
Protection against foreign matter and water – Front – Rear – Front with seal	 IP40 according to EN60529 IP20 according to EN60529 IP54 according to EN60529
USB CABLE (included in delivery)	
USB 2.0 (type A to type B connector)	1.8 m (1.97 yd)

UMG 604-PRO

FUNCTIONALLY EXPANDABLE POWER ANALYZER

INTERFACES
- Ethernet
- RS-232
- RS-485

PERIPHERALS
- Digital inputs and outputs e.g. pulse input
- State monitoring and limit value output
- Thermistor input

ENERGY MANAGEMENT
- Peak load optimization (optional)
- Up to 64 switch-off stages

PROGRAMMABLE
- PLC functionality
- Jasic®
- APPs from the Janitza library

DEVICE HOMEPAGE
- Online & historical data
- Graphs available directly on homepage

MEASURING ACCURACY
- Class 0.5S
- Sampling frequency 20 kHz

MEASUREMENT DATA MEMORY
- 128 MB/approx. 47.97 months (according to factory setting)
- Record range up to 2 years

POWER QUALITY
- Harmonics current up to the 40th harmonic
- Events and transients
- Unbalance
- Full wave RMS recording

UMG 604-PRO



ENERGY MANAGEMENT

Energy data acquisition with power quality analysis

COMMUNICATION

Integrated Modbus gateway for integration of devices (energy meters)

POWER QUALITY

Capture of events and transients

DIMENSIONED DRAWING

All dimensions in mm

Front view

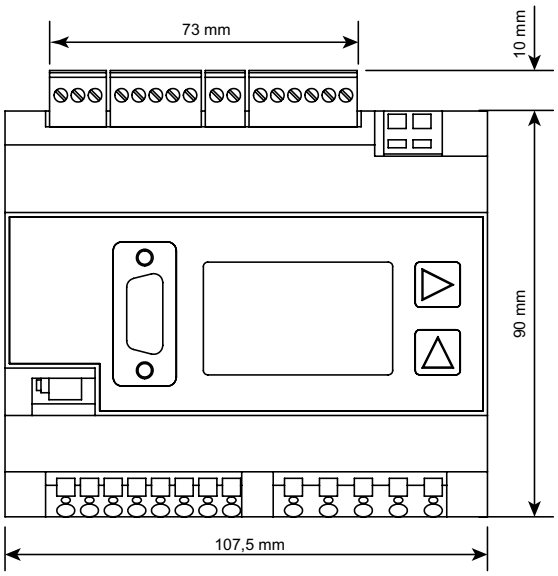

Requires 6 HP (Horizontal pitch)

Side view

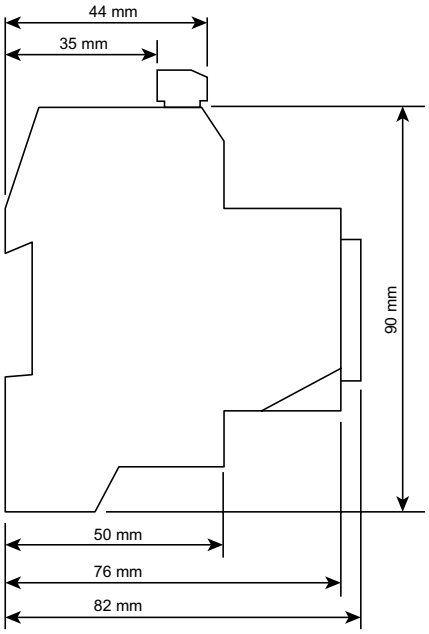

CONNECTION EXAMPLE

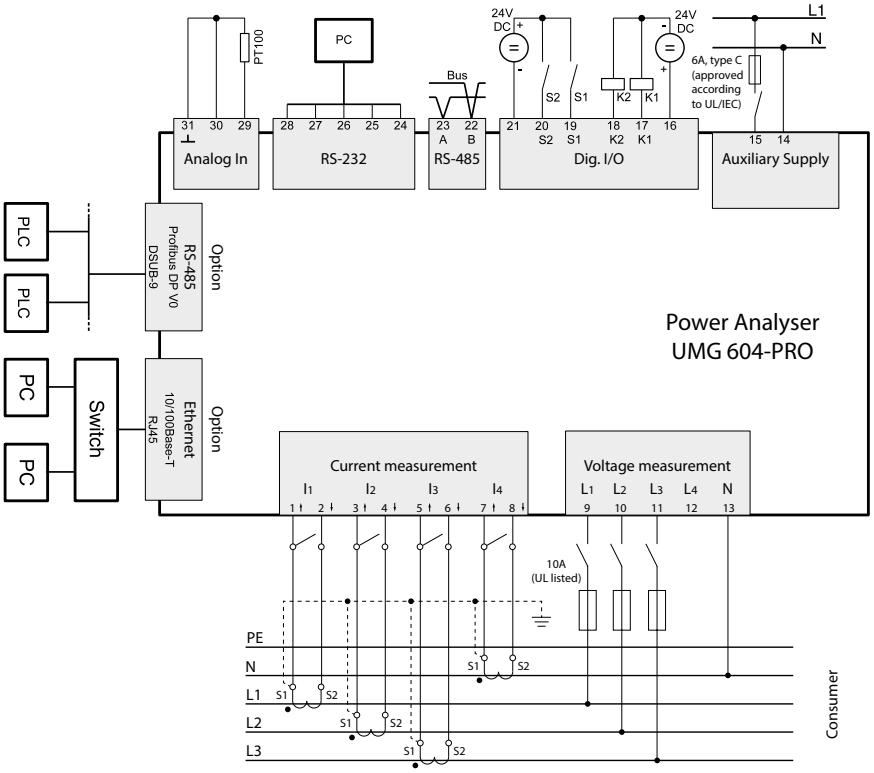

TECHNICAL DATA

	UMG 604E-PRO	
ITEM NO.	**5216202**	**5216222**
Supply voltage, AC	95 …. 240 VAC	20 …. 50 VAC
Supply voltage, DC	135 … 340 V DC	20 … 70 V DC
INTERFACES		
RS-485: 9.6 – 921.6 kbps (pluggable screw terminal)	•	•
RS-232: 9.6 – 115.2 kbps (pluggable screw terminal)	•	•
Profibus DP: up to 12 Mbps (DSUB-9 plug)	–	–
Ethernet 10/100 base TX (RJ-45 socket)	•	•
PROTOCOLS		
Modbus RTU, Modbus TCP, Modbus RTU over Ethernet	•	•
Modbus gateway for master-slave configuration	•	•
Profibus DP V0	–	–
HTTP (homepage configurable)	•	•
SMTP (email)	•	•
NTP (time synchronization)	•	•
TFTP (automatic configuration)	•	•
FTP (file transfer)	•	•
SNMP	•	•
DHCP	•	•
TCP/IP	•	•
BACnet (optional)	•	•
ICMP (ping)		
DEVICE OPTIONS		
BACnet communication	5216081	5216081
Basic package GridVis® edition Expert	5100699	5100699

A single GridVis® Expert item package can be purchased for this product (item no.: 5100699). This package contains 1 item with an update period of one year. You can extend this at any time for a further year (item no.: 5100739).

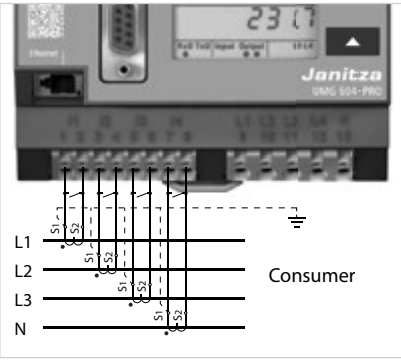

Fig.: Current measurement via current transformers

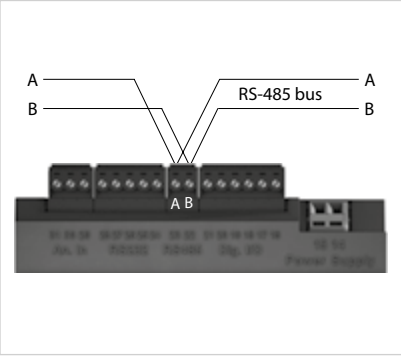

Fig.: RS-485 interface, 2-pole plug contact

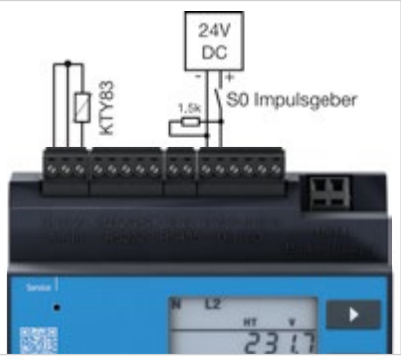

Fig.: Example thermistor input (KTY83) and S0 pulse generator

TECHNICAL DATA

GENERAL

Net weight	350 g (0.771 lb)
Device dimensions in mm (W x H x D)	approx. 90 x 82 x 107.5 mm (3.54 x 3.23 x 4.23 in)
Horizontal pitch	6 HP
Housing flammability rating	UL 94V-0
Installation position	any
Fastening/assembly	35 mm DIN rail (per IEC/EN60999-1, DIN EN 50022)
Battery	Type Lithium CR2032, 3 V (approval i.a.w. UL 1642)
Service life of the backlight (optional)	40000 h (50 % of the start brightness)
Impact resistance	IK08 according to IEC 62262

ENVIRONMENTAL CONDITIONS

The device is intended for weatherproof, fixed installation and meets the operational conditions in accordance with DIN IEC 60721-3-3.	
Working temperature range	–10 °C to +55 °C (14 °F to 131 °F)
Relative humidity	5 to 95 %, (at +25 °C/77 °F), without condensation
Pollution degree	2
Operating elevation	0 to 2000 m (1.24 mi) above sea level
Installation position	any
Ventilation	Forced ventilation is not required

TRANSPORT AND STORAGE

The following information applies to devices which are transported or stored in the original packaging.

Free fall	1 m (39.37 in)
Temperature	–20 °C to +70 °C (–4 °F to 158 °F)

SUPPLY VOLTAGE

The supply voltage must be connected through a UL/IEC approved fuse (6A Char. B) to the device.

230 V option:	
Nominal range	95 V to 240 V (50/60 Hz) / DC 135 V to 340 V
Operating range	±10 % of nominal range
Power consumption	max. 3.2 W / 9 VA
Overvoltage category	300 V CAT II
90 V option (without UL approval):	
Nominal range	50 V to 110 V (50/60 Hz) / DC 50 V to 155 V
Operating range	±10 % of nominal range
Power consumption	max. 3.2 W / 9 VA
Overvoltage category	300 V CAT II
24 V option:	
Nominal range	20 V to 50 V (50/60 Hz) / DC 20 V to 70 V
Operating range	±10 % of nominal range
Power consumption	max. 5 W / 8 VA
Overvoltage category	150 V CAT II

TERMINAL CONNECTION CAPACITY (SUPPLY VOLTAGE)

Conductors to be connected. Only one conductor can be connected per terminal!

Single core, multi-core, fine-stranded	0.08–2.5 mm², AWG 28-12
Cable end sleeve (non-insulated)	0.20–1.5 mm², AWG 24-16
Cable end sleeve (insulated)	0.25–1.5 mm²,AWG 24-16
Stripping length	5–6 mm (0.2–0.24 in)

PROTECTION CLASS

Protection class II according to IEC 60536 (VDE 0106, Part 1), no ground wire connection is required!

Protection against ingress of solid foreign bodies and water	IP20 in accordance with EN60529 September 2014, IEC60529:2013

DIGITAL INPUTS

Maximum counter frequency (pulse input S0)	20 Hz
Switching input	
Input signal present	18 V to 28 VDC (typically 4 mA)
Input signal not present	0 to 5 VDC, current less than 0.5 mA
Response time (Jasic program)	200 ms
Cable length	up to 30 m (32.81 yd) unshielded; greater than 30 m (32.81 yd) shielded

DIGITAL OUTPUTS (2 digital outputs; solid state relays, not short-circuit proof)

Switching voltage	max. 60 V DC, 30 V AC
Switching current	max. 50 mA_{eff} AC/DC
Response time (Jasic program)	200 ms
Output of voltage dips	20 ms
Output of voltage surges	20 ms
Switching frequency	max. 20 Hz
Cable length	up to 30 m (32.81 yd) unshielded; greater than 30 m (32.81 yd) shielded

TERMINAL CONNECTION CAPACITY (DIGITAL INPUTS AND OUTPUTS)

Single core, multi-core, fine-stranded	0.2–1.5 mm^2, AWG 24-16
Cable end sleeve (not insulated)	0.2–1.5 mm^2
Cable end sleeve (insulated)	0.2–1.5 mm^2
Tightening torque	0.25 Nm (2.21 lbf in)
Stripping length	7 mm (0.2756 in)

TEMPERATURE MEASUREMENT INPUT (3-wire measurement)

Update time	approx. 200 ms
Connectable sensors	PT100, PT1000, KTY83, KTY84
Total burden (sensor and cable)	max. 4 kΩ
Cable length	up to 30 m (32.81 yd) unshielded; greater than 30 m (32.81 yd) shielded

SENSOR TYPE	TEMPERATURE RANGE	RESISTANCE RANGE	MEASUREMENT UNCERTAINTY
KTY83	–55 °C to +175 °C (–67 °F to +347 °F)	500 Ω to 2.6 kΩ	±1.5 % rng[1)]
KTY84	–40 °C to +300 °C (–40 °F to +572 °F)	350 Ω to 2.6 kΩ	±1.5 % rng[1)]
PT100	–99 °C to +500 °C (–146.2 °F to +932 °F)	60 Ω to 180 Ω	±1.5 % rng[1)]
PT1000	–99 °C to +500 °C (–146.2 °F to +932 °F)	600 Ω to 1.8 kΩ	±1.5 % rng[1)]

[1)] *rng = measuring range*

TERMINAL CONNECTION CAPACITY: TEMPERATURE MEASUREMENT INPUT

Single core, multi-core, fine-stranded	0.2–1.5 mm^2, AWG 24-16
Cable end sleeve (not insulated)	0.2–1.5 mm^2
Cable end sleeve (insulated)	0.2–1.5 mm^2
Tightening torque	0.25 Nm (2.21 lbf in)
Stripping length	7 mm (0.2756 in)

VOLTAGE MEASUREMENT INPUTS

Three-phase 4-conductor systems (L-N/L-L)	max. 277 V / 480 V
Three-phase 3-conductor systems (L-L)	max. 480 V
Resolution	0.01 V
Measuring range L-N	0[1] to 600 V_{rms}
Measuring range L-L	0[1] to 1000 V_{rms}
Crest factor	2 (related to 480 V_{rms})
Overvoltage category	300 V CAT III
Rated surge voltage	4 kV
Protection of the voltage measurement	1–10 A
Impedance	4 MΩ/phase
Power consumption	approx. 0.1 VA
Sampling rate	20 kHz/phase
Transients	> 50 µs
Frequency of the fundamental oscillation	45 Hz to 65 Hz
Resolution	0.001 Hz

[1] The UMG device can only determine measured values if at least one voltage measurement input has an L-N voltage of greater than 10 V_{eff} or an L-L voltage of greater than 18 V_{eff}.

TERMINAL CONNECTION CAPACITY (VOLTAGE MEASUREMENT Conductors to be connected. Only one conductor can be connected per terminal!

Single core, multi-core, fine-stranded	0.08–4.0 mm², AWG 28-12
Cable end sleeve (not insulated)	0.25–2.5 mm²
Cable end sleeve (insulated)	0.25–2.5 mm²
Stripping length	8–9 mm (0.31–0.35 in)

CURRENT MEASUREMENT INPUTS

Nominal current	5 A
Rated current	6 A
Protection when measuring directly (without a current transformer)	6 A, Char. B (approved according to UL/IEC)
Resolution on the display	10 mA
Metering range	0.005 to 7 Amps
Crest factor	2 (related to 6 Amps)
Overvoltage category	300 V CAT III
Measurement surge voltage	4 kV
Power consumption	approx. 0.2 VA (Ri = 5 mΩ)
Overload for 1 sec.	100 A (sinusoidal)
Sampling rate	20 kHz
Measurement precision phase angle	0.15°

TERMINAL CONNECTION CAPACITY (CURRENT MEASUREMENT) Conductors to be connected. Only one conductor can be connected per terminal!

Single core, multi-core, fine-stranded	0.08–4.0 mm², AWG 28-12
Cable end sleeve (non-insulated)	0.25–2.5 mm²
Cable end sleeve (insulated)	0.25–2.5 mm²
Stripping length	8–9 mm (0.31–0.35 in)

RS232 INTERFACE

Connection	5-pin screw-type terminals
Protocol	Modbus RTU/slave
Transmission rate	9.6 kbps, 19.2 kbps, 38.4 kbps, 57.6 kbps, 115.2 kbps

RS485 INTERFACE

Connection	2-pin screw-type terminals
Protocol	Modbus RTU/Slave, Modbus RTU/Master
Transmission rate	9.6 kbps, 19.2 kbps, 38.4 kbps, 57.6 kbps, 115.2 kbps, 921.6 kbps

TERMINAL CONNECTION CAPACITY (RS232 / RS485)

Single core, multi-core, fine-stranded	0.2–1.5 mm², AWG 24-16
Cable end sleeve(not insulated)	0.2–1.5 mm²
Cable end sleeve (insulated)	0.2–1.5 mm²
Tightening torque	0.25 Nm (2.21 lbf in)
Stripping length	7 mm (0.2756 in)

ETHERNET INTERFACE

Connection	RJ45
Function	Modbus gateway, embedded web server (HTTP)
Protocols	TCP/IP, EMAIL (SMTP), DHCP client (BootP), Modbus/TCP(Port 502), ICMP (Ping), NTP, TFTP, Modbus RTU over Ethernet (Port 8000), FTP SNMP

POTENTIAL ISOLATION AND ELECTRICAL SAFETY OF THE INTERFACES

– The RS-485, RS-232, Profibus and Ethernet interfaces are double insulated from the current and voltage measurement inputs as well as from the supply voltage.
– The RS-232 and RS-485 interfaces are not isolated from each other and from the temperature measurement input.
– The Profibus and Ethernet interfaces are functionally isolated from each other and from the RS-232, RS-485, temperature measurement input and digital inputs and outputs.
– The interfaces of the devices connected here must have double or reinforced insulation from mains voltages (according to IEC 61010-1: 2010).

MEASUREMENT UNCERTAINTY

The measurement uncertainty of the device applies to its use for the following measuring ranges. The measured value must be within the specified limits. The measurement uncertainty is not specified outside these limits.

Measured value	**Measurement uncertainties**	
Voltage	±0.2 %	according to DIN EN 61557-12:2008
Current L	±0.25 %	following DIN EN 61557-12:2008
Current N	±1 %	according to DIN EN 61557-12:2008
Power	±0.4 %	according to DIN EN 61557-12:2008
Harmonics U, I	Class 1	DIN EN 61000-4-7
Active energy		
Current transformer …/5 A	Class 0.5 Class 0.5S Class 0.5	(IEC61557-12) (IEC62053-22) (ANSI C12.20)
Current transformer …/1 A	Class 1	(IEC61557-12)
Reactive energy		
Current transformer …/5 A	Class 2	(IEC62053-23)
Current transformer …/1 A	Class 2	(IEC62053-23)
Frequency	±0.01 Hz	
Internal clock	±1 minute/month (18 °C to 28 °C/64.4 °F to 82.4 °F)	

The specification applies under the following conditions:
– annual re-calibration,
– a warm-up time of 10 minutes,
– an ambient temperature of 18 to 28 °C.
If the device is operated outside the range of 18 to 28 °C, an additional measurement error of ±0.01 % of the measured value per °C deviation must be considered.

UMG 605-PRO

POWER QUALITY ANALYZER

CLASS S ACCORDING TO IEC 61000-4-30

POWER QUALITY
- Analysis onboard
- 63rd harmonic
- Flicker measurement
- Events and transients
- Unbalance
- Half-wave RMS value recording

PROGRAMMABLE
- PLC functionality
- Jasic®
- APPs from the Janitza library

DEVICE HOMEPAGE
- Online & historical data
- Graphs available directly on homepage

INTERFACES
- Ethernet
- RS-232
- RS-485

GATEWAY
- Integration in PLC systems and BMS
- Simultaneous query of the interfaces

PERIPHERALS
- Digital inputs and outputs e.g. pulse input
- State monitoring and limit value output
- Thermistor input

MEASURING ACCURACY
- Class 0.5S
- Sampling frequency 20 kHz

MEASUREMENT DATA MEMORY
- 128 MB/approx. 2.37 months (according to factory setting)
- Record range up to 2 years

UMG 605-PRO



POWER QUALITY

Measurement of power quality parameters according to Class S

APPS

Watchdog monitoring of the PQ standards

ENERGY MANAGEMENT

Additional acquisition of energy measurement data

DIMENSIONED DRAWING

All dimensions in mm

Front view

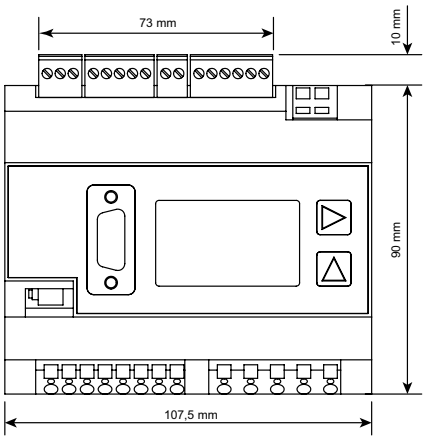

Requires 6 HP (Horizontal pitch)

Side view

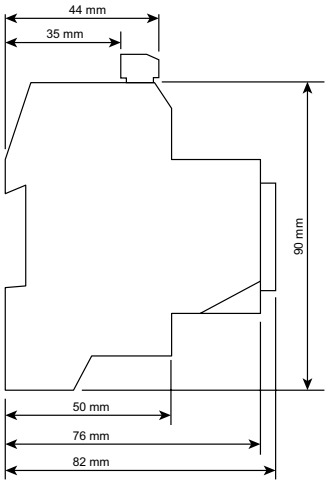

CONNECTION EXAMPLE

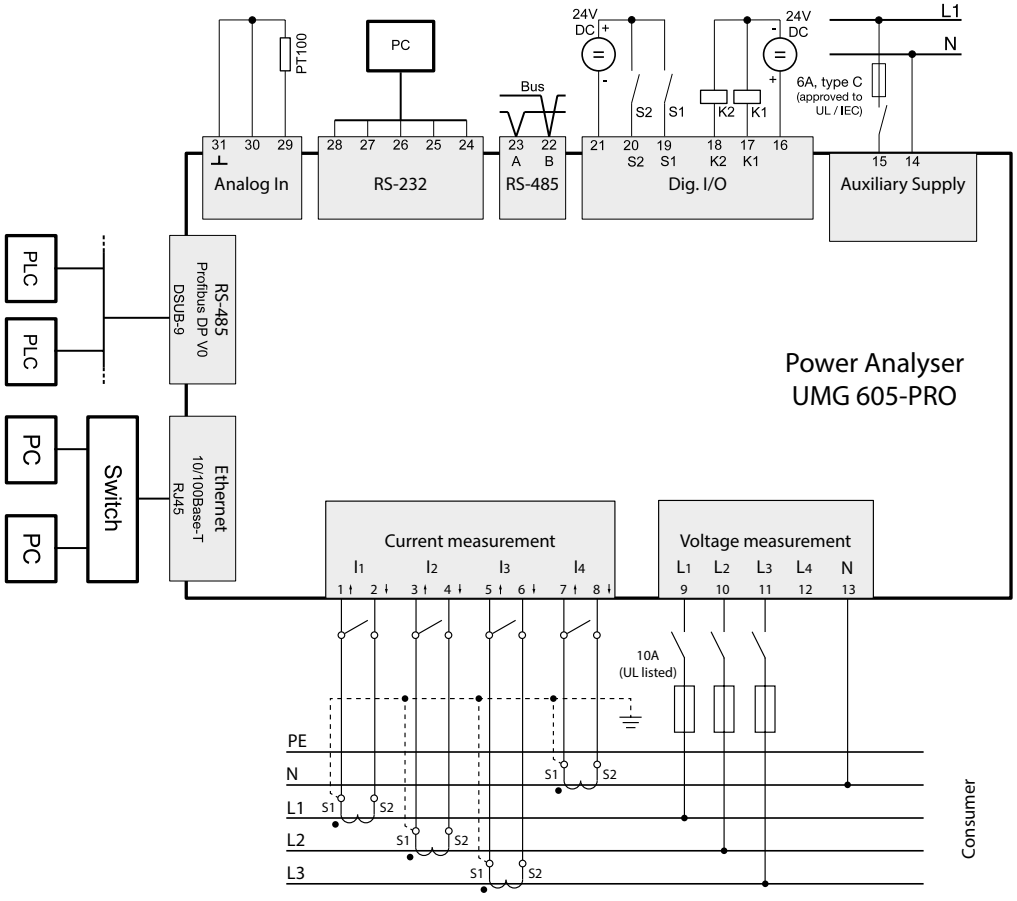

TECHNICAL DATA

	UMG 605-PRO	
ITEM NO.	**5216227**	**5216229**
Supply voltage, AC	95 …. 240 V AC	20 …. 50 V AC
Supply voltage, DC	135 … 340 V DC	20 … 70 V DC
DEVICE OPTIONS		
BACnet communication	5216083	5216083
Basic package GridVis® edition Expert	5100699	5100699

A single GridVis® Expert item package can be purchased for this product (item no.: 5100699). This package contains 1 item with an update period of one year. You can extend this at any time for a further year (item no.: 5100739).

GENERAL	
Net weight	350 g (0.77 lb)
Device dimensions in mm (W x H x D)	approx. 90 x 82 x 107.5 mm (3.54 x 3.23 x 4.23 in) (according to DIN 43871:1992)
Horizontal pitch	6 HP
Housing flammability rating	UL 94V-0
Installation position	any
Fastening/assembly	DIN rail 35 mm (according to IEC/EN60999-1, DIN EN 50022)
Battery	Type, Lithium CR2032, 3 V

ENVIRONMENTAL CONDITIONS	
The device is intended for weatherproof, fixed installation and meets the operational conditions in accordance with DIN IEC 60721-3-3.	
Working temperature range	–10 °C to +55 °C
Relative humidity	5 to 95 %, (at +25 °C/77 °F), without condensation
Pollution degree	2
Operating elevation	0 to 2000 m above sea level
Installation position	any
Ventilation	Forced ventilation is not required

TRANSPORT AND STORAGE The following information applies to devices that are transported or stored in their original packaging.	
Free fall	1 m
Temperature	–20 °C to +70 °C (–4 °F to 158 °F)

SUPPLY VOLTAGE The supply voltage must be connected through a UL/IEC approved fuse (6A Char. B) to the device.	
230 V option:	
Nominal range	95 V to 240 V (50/60 Hz) / DC 135 V to 340 V
Operating range	±10 % of nominal range
Power consumption	max. 3.2 W / 9 VA
Overvoltage category	300 V CAT II
90 V option (without UL approval):	
Nominal range	50 V to 110 V (50/60 Hz) / DC 50 V to 155 V
Operating range	±10 % of nominal range
Power consumption	max. 3.2 W / 9 VA
Overvoltage category	300 V CAT II
24 V option:	
Nominal range	20 V to 50 V (50/60 Hz) / DC 20 V to 70 V
Operating range	±10 % of nominal range
Power consumption	max. 5 W / 8 VA
Overvoltage category	150 V CAT II

TERMINAL CONNECTION CAPACITY (SUPPLY VOLTAGE) Connectable conductors. Only one conductor may be connected per terminal!	
Single core, multi-core, fine-stranded	0.08–2.5 mm², AWG 28-12
Terminal pins, core end sheath	1.5 mm², AWG 16

PROTECTION CLASS Protection class II according to IEC 60536 (VDE 0106, part 1), i.e. a ground wire connection is not required!	
Protection against ingress of solid foreign bodies and water	IP20 in accordance with EN60529 September 2014, IEC60529:2013

DIGITAL INPUTS	
(Pulse input S0)	
Maximum counter frequency	20 Hz
Switching input	
Input signal present	18 V to 28 VDC (typically 4 mA)
Input signal not present	0 to 5 VDC, current less than 0.5 mA
Response time (Jasic program)	200 ms
Cable length	up to 30 m unshielded; greater than 30 m shielded

DIGITAL OUTPUTS (2 digital outputs; semiconductor relays, not short-circuit proof)	
Switching voltage	max. 60 VDC, 30 V AC
Switching current	max. 50 mA_{eff} AC/DC
Response time (Jasic program)	200 ms
Output of voltage dips	20 ms
Output of voltage exceedance events	20 ms
Switching frequency	max. 20 Hz
Cable length	up to 30 m unshielded; greater than 30 m shielded

TERMINAL CONNECTION CAPACITY: DIGITAL INPUTS AND OUTPUTS	
Single core, multi-core, fine-stranded	0.2–1.5 mm^2, AWG 24-16
Cable end sleeve (not insulated)	0.2–1.5 mm^2
Cable end sleeve (insulated)	0.2–1.5 mm^2
Tightening torque	0.25 Nm (2.21 lbf in)
Stripping length	7 mm (0.2756 in)

TEMPERATURE MEASUREMENT INPUT	
Update time	approx. 200 ms
Connectible sensors	PT100, PT1000, KTY83, KTY84
Total burden (sensor and cable)	max. 4 kΩ
Cable length	up to 30 m unshielded; greater than 30 m shielded

SENSOR TYPE	TEMPERATURE RANGE	RESISTANCE RANGE	MEASUREMENT UNCERTAINTY
KTY83	–55 °C to +175 °C	500 Ω to 2.6 kΩ	±1.5 % rng[1)]
KTY84	–40 °C to +300 °C	350 Ω to 2.6 kΩ	±1.5 % rng[1)]
PT100	–99 °C to +500 °C	60 Ω to 180 Ω	±1.5 % rng[1)]
PT1000	–99 °C to +500 °C	600 Ω to 1.8 kΩ	±1.5 % rng[1)]

1) rng = measuring range

TERMINAL CONNECTION CAPACITY: TEMPERATURE MEASUREMENT INPUT	
Single core, multi-core, fine-stranded	0.2–1.5 mm^2, AWG 24-16
Cable end sleeve (not insulated)	0.2–1.5 mm^2
Cable end sleeve (insulated	0.2–1.5 mm^2
Tightening torque	0.25 Nm (2.21 lbf in)
Stripping length	7 mm (0.2756 in)

RS232 INTERFACE	
Connection	5-pole screw-type terminals
Protocol	Modbus RTU/slave
Transmission rate	9.6 kbps, 19.2 kbps, 38.4 kbps, 57.6 kbps, 115.2 kbps

RS485 INTERFACE	
Connection	2-pin screw-type terminals
Protocol	Modbus RTU/slave, Modbus RTU/master
Transmission rate	9.6 kbps, 19.2 kbps, 38.4 kbps, 57.6 kbps, 115.2 kbps, 921.6 kbps

TERMINAL CONNECTION CAPACITY (RS232 / RS485)	
Single core, multi-core, fine-stranded	0.20–1.5 mm², AWG 24-16
Cable end sleeve (not insulated)	0.20–1.5 mm²
Cable end sleeve (insulated)	0.20–1.5 mm²
Tightening torque	0.25 Nm (2.21 lbf in)
Stripping length	7 mm (0.2756 in)

PROFIBUS INTERFACE	
Connection	SUB D 9-pin
Protocol	Profibus DP/V0 according to EN 50170
Transmission rate	9.6 kBaud to 12 MBaud

ETHERNET INTERFACE	
Connection	RJ45
Function	Modbus gateway, embedded web server (HTTP)
Protocols	TCP/IP, EMAIL (SMTP), DHCP client (BootP), Modbus/TCP (port 502), ICMP (ping), NTP, TFTP, Modbus RTU over Ethernet (port 8000), FTP SNMP

VOLTAGE MEASUREMENT INPUTS	
Three-phase 4-conductor systems (L-N/L-L)	max. 277 V / 480 V
Three-phase 3-conductor systems (L-L)	max. 480 V
Resolution	0.01 V
Crest factor	2 (related to 480 V_{rms})
Overvoltage category	300 V CAT III
Measurement surge voltage	4 kV
Protection of voltage measurement	1–10 A
Impedance	4 MΩ/phase
Power consumption	approx. 0.1 VA
Sampling rate	20 kHz/phase
Transients	> 50 µs
Frequency of the fundamental oscillation	15 Hz to 440 Hz
Resolution	0.001 Hz

CURRENT MEASUREMENT INPUTS	
Nominal current	5 A
Rated current	6 A
Protection when measuring directly (without a current transformer)	6 A, Char. B (approved i.a.w. UL/IEC)
Resolution on the display	10 mA
Crest factor	2 (related to 6 Arms)
Overvoltage category	300 V CAT III
Measurement surge voltage	4 kV
Power consumption	approx. 0.2 VA (Ri = 5 mΩ)
Overload for 1 s	100 A (sinusoidal)
Sampling rate	20 kHz
Measurement precision phase angle	0.15 °

TERMINAL CONNECTION CAPACITY (VOLTAGE AND CURRENT MEASUREMENT) Conductors to be connected. Only one conductor can be connected per terminal!	
Single core, multi-core, fine-stranded	0.08–4 mm², AWG 28-12
Cable end sleeve (not insulated)	0.25–2.5 mm²
Cable end sleeve (insulated	0.25–2.5 mm²
Stripping length	8–9 mm (0.31–0.35 in)

RCM 202-AB

RESIDUAL CURRENT ANALYZER

TYPE A, TYPE B, TYPE B+

PERIPHERALS
- 2 digital alarm outputs
- 2 freely scalable analog outputs

COMMUNICATION
- Modbus RTU

RESIDUAL CURRENT MONITORING
- 2 channels
- Compatible with all Janitza residual current transformers
- All-current sensitive up to 20 kHz (Type A, B and B+)

RCM ANALYSIS VARIABLES
- Individual limit values can be set for type A, type B and type B+
- Individual frequencies for 1-2000 Hz
- Spectrum display for 2–20 kHz

MEASUREMENT METHOD/ TRANSFORMERS:
- Use of type A transformers for residual currents for a Type B/B+ measurement (measurement according to DIN EN 62020)
- Transformer: CT-AC RCM series, DACT 20, KBU 23/58/812 D

NETWORKS
- TN networks
- TT networks

DISPLAY
- LCD display
- Display of the momentary current values
- Errors and alarms

CONFIGURATION
- Completely configurable on site

RCM 202-AB



SAFETY

Alarms in case of limit violations via outputs and Modbus

PRICE

Easy integration, use of conventional transformers

RCM

Type A, B & B+ (up to 20 kHz), also with conventional type A CTs

DIMENSIONED DRAWING

All dimensions in mm

Front view



Requires 4 HP (Horizontal pitch)

Side view

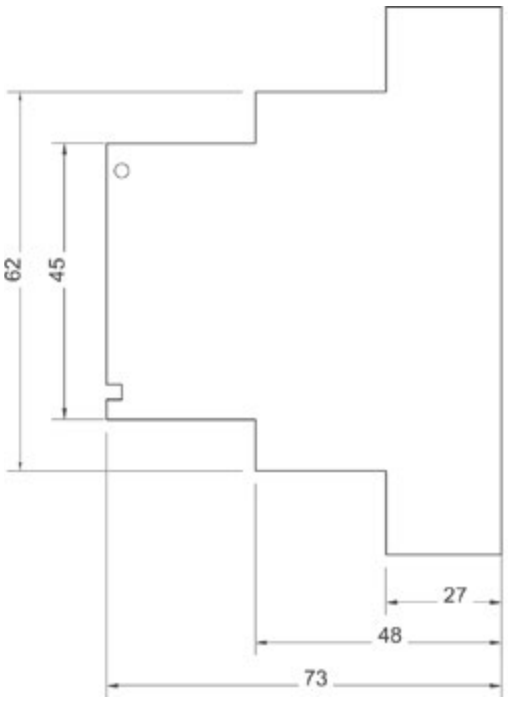



A **Sensitive to pulsed current**
Sinusoidal alternating current
pulsed direct current

B **Universally current sensitive**
All currents up to 2 kHz

B + **Universally current sensitive**
All currents up to 20 kHz

kHz

APPLICATION EXAMPLE

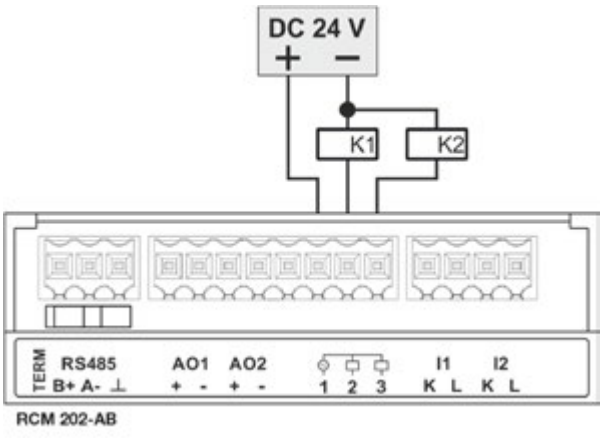

Fig.: Application example for RCM 202-AB in stand-alone operation – Connection of two relays to the digital outputs

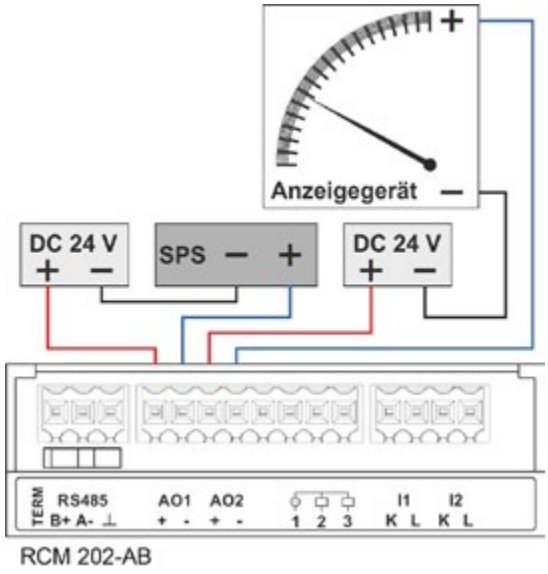

Fig.: Application example for analog outputs (interface 4 .... 20 mA) – Connection of a display device and a PLC to the analog outputs

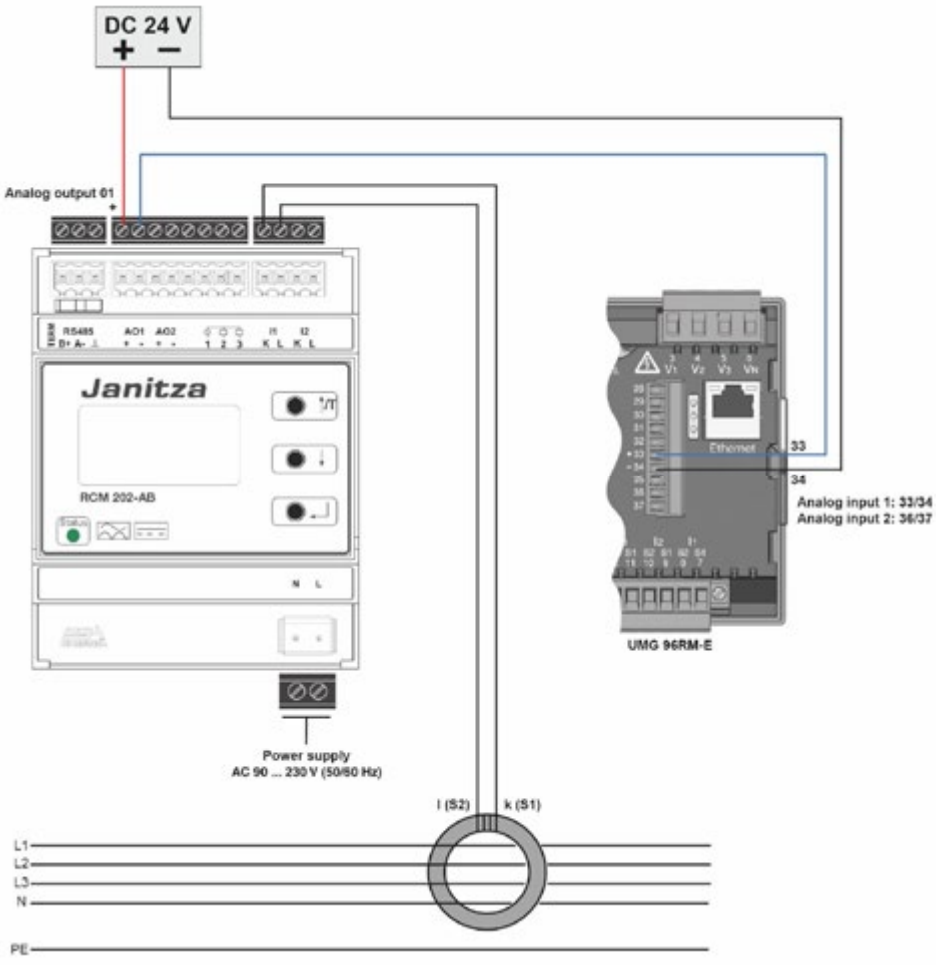

Fig.: Application example for analog outputs and UMG 96RM-E

TECHNICAL DATA

RCM 202-AB	
ITEM NO.	**1401627**
OPERATING DATA	
Supply voltage U_s	AC 90 to 230 V, 50/60 Hz
Required external back-up fuse for the power supply	Circuit breaker 1 pole, 3 A, AC 230 V
Operating mode	Continuous operation
Power consumption (internal consumption)	8 W
ISOLATION COORDINATION ACCORDING TO IEC 60664-1	
Rated current Ib	4 kA
Rated surge voltage	4 kV
Pollution degree	2
Rated voltage	AC 250 V, 50–60 Hz
MEASUREMENT TRANSFORMER TYPES/TRANSFORMATION RATIO:	
Current measurement transformer rated voltage	AC 20–720 V
Current measurement transformer rated frequency	0–20 kHz
Current measurement transformer rated current	(depending on the type)
MEASUREMENT CHANNELS	
Number of measuring channels	2 (connectable current measurement transformers)
Measured value recording	Parallel, effective value measurement (true RMS)
Evaluation	Residual current Type A and B according to IEC 62020
Measurement response residual current $I_{\Delta n}$	Parameterizable, 20 mA to 20 A
Response delay time of the warning and alarm messages t_v	Parameterizable, 10 ms to 10 s
Reset delay time t_{vr}	Parameterizable, 10 ms to 10 s
TRANSFORMER CONNECTIONS	
Connection to the current measurement transformers	Line resistance max. 2 Ω
Line/transformer	2-wire
LINE LENGTH	
Single wires (0.75 to 1.5 mm²)	max. 1 m
Twisted single wires (0.75 to 1.5 mm²)	max. 10 m
Shielded cable (0.75 to 1.5 mm²)	max. 10 m
DISPLAYS, MESSAGES AND MEMORY	
Full graphics display (LCD)	128 x 64 pixels with backlight
Status LED	3-color
Controls	3 keys
Menu languages	German, English, Spanish
Date and time	With RTC, stored in the non-volatile memory
Parameterization	On RCM 202-AB in the configuration menu
Messages	Display, LED, Modbus, digital outputs
Measured value memory	18,725 datasets (circular buffer) With date and time
EXAMPLES	
Shielded cable 0.75 mm² (shield on I)	Max. length 20 m (21.87 yd)
Cable type J-Y(ST)Y Ø 0.6 mm	Max. length 15 m (16.4 yd)
ANALOG OUTPUTS	
Interface	4–20 mA
Quantity	2
Supply voltage of the analog outputs	DC 12 to 24 V

DIGITAL OUTPUTS

Number of digital outputs	2
Switching voltage	max. DC 60 V, AC 30 V
Maximum current	350 mA
Start-up resistance	2 Ω
Maximum cable length	up to 30 m (32.8 yd) unshielded, above 30 m (32.8 yd) shielded

RS485 INTERFACE

Protocol	Modbus RTU (RCM 202-AB as the slave)
Interface	RS485
Baud rate	Parameterizable, 9.6 to 115.2 kbaud
Address range	1 to 247
Max. cable length (38.4 kbaud)	1200 m (1212.3 yd)
Cable (shielded, shield one-sided on PE)	Unitronic Li2YCY(TP) 2x2x0.22 (Lapp cable)
Termination resistor	120 Ω (can be activated on the device)

DEVICE SAFETY (Safety regulations for electrical measuring, control, regulation and laboratory devices)

Part 1: General requirements	IEC/EN 61010-1
Part 2-030: Particular requirements for equipment having testing or measuring circuits	IEC/EN 61010-2-030

IMMUNITY FROM INTERFERENCE

Class A: Industrial sector	IEC/EN 61326-1
Electrostatic discharges	IEC/EN 61000-4-2
Voltage dips	IEC/EN 61000-4-11

EMISSIONS

Class B: Residential sector	IEC/EN 61326-1
RFI field strength 30 to 1000 MHz	IEC/CISPR11/EN 55011
Radiated interference voltage 0.15 to 30 MHz	IEC/CISPR11/EN 55011

STANDARDS

The RCM 202-AB fulfills the requirements according to EN 62020:1998+A1:2005 (VDE 0663):2005

AMBIENT CONDITIONS

Ambient temperature during operation	–5 to +55 °C (23 °F to 131 °F)
Ambient temperature during storage	–25 to +70 °C (–13 °F to 158 °F)
Ambient temperature during transport	–25 to +70 °C (–13 °F to 158 °F)
Altitude	0 to 2000 m (0 to 1.24 mi)
Climate class according to IEC 60721-3-3 (operation)	3K5

INSTALLATION CONDITIONS

Installation position	horizontal/vertical
Assembly	Top hat rail per DIN EN 60715
Device dimensions in mm (H x W x D)	71 x 90 x 73
Horizontal pitch	4 HP
Protection class according to EN 60259	IP 20
Protection class	II
Flammability rating	UL 94V-0
Weight	approx. 170 g (0.375 lbs)
Connection type/cable	Series terminal/copper
Connection cross section, single-wire/finely stranded	0.2 to 4 mm²/0.2 to 1.5 mm² (AWG 24-15)

RCM 201-ROGO

RESIDUAL CURRENT MONITORING DEVICE

TYPE A FOR ROGOWSKI CURRENT TRANSFORMERS

RESIDUAL CURRENT MONITORING
- 1 connection
- Compatible with Janitza Rogowski coils
- Type A measurement up to 5 kHz
- DIN EN 62020

ROGOWSKI COIL
- Retrofittable
- Large cable cross sections and busbars
- Up to 4000 A

ALARM FUNCTION
- Configurable limit values
- Alarm output

PERIPHERALS
- 1 x 0–40 mA analog output

COMMUNICATION
- Modbus RTU

INTERFACE
- RS-485

OPERATION
- Current measurement range configurable directly on the device
- Button lock via Modbus

NETWORKS
- TN-S systems

CONFIGURATION
- Configurable on site

RCM 201-ROGO



RCM

Acquisition of AC residual and residual currents in applications

COMPACT

Compact design, flexible mounting of Rogowski coils

COMMUNICATION

Easy integration using Modbus communication

CONNECTION EXAMPLE

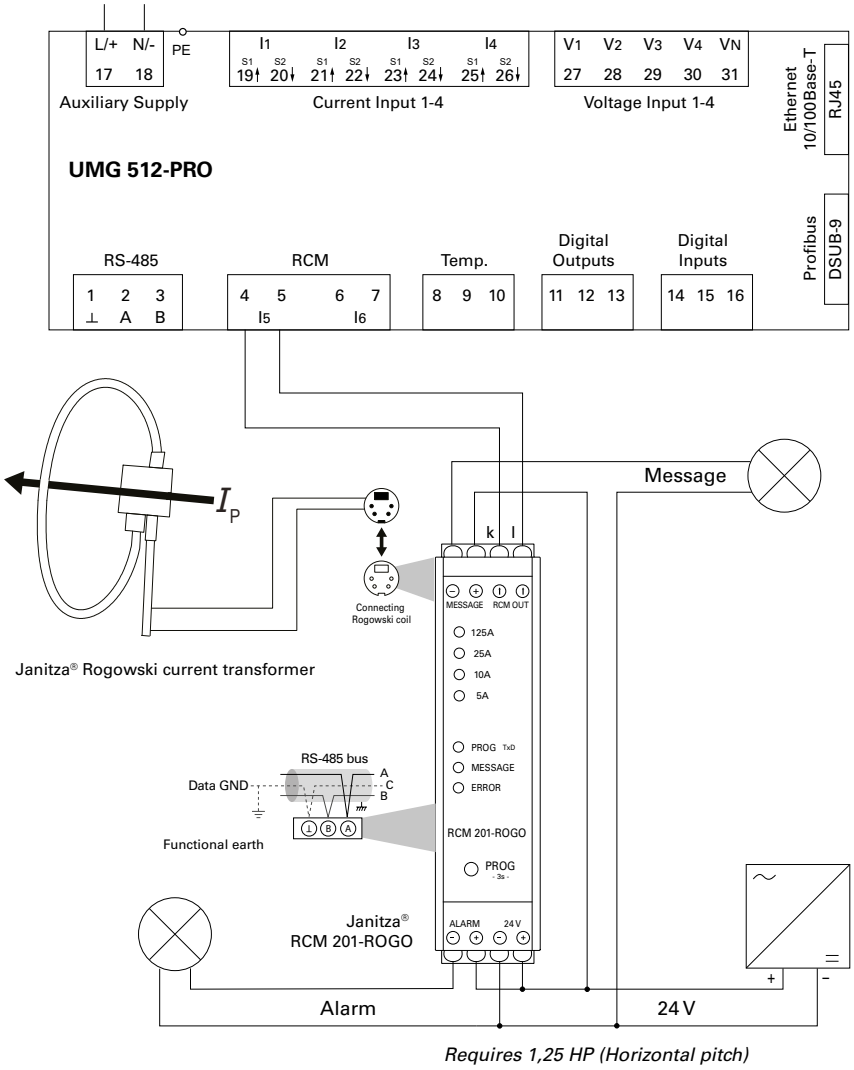

Requires 1,25 HP (Horizontal pitch)

Fig.: Connection example to a UMG 512-PRO

TECHNICAL DATA

ROGOWSKI COILS	
ITEM NO. (Ø 120 MM, COIL LENGTH 350 MM)	**1503622**
ITEM NO. (Ø 200 MM, COIL LENGTH 600 MM)	**1503623**
ITEM NO. (Ø 290 MM, COIL LENGTH 900 MM)	**1503624**
ITEM NO. (Ø 390 MM, COIL LENGTH 1200 MM)	**1503625**
ITEM NO. (Ø 580 MM, COIL LENGTH 1800 MM)	**1503626**
Connection cable length	3.0 m
Closure	Bayonet
Working temperature	–30 °C to +80 °C (–22 °F to 176 °F)
Storage temperature	–40 °C to +80 °C (–40 °F to 176 °F)
Secondary voltage	100 mV/1kA @ 50 Hz
Overvoltage category	1000 Vrms CAT III 600 Vrms CAT IV
Protection level	IP67

NOTE

In order to ensure smooth operation of the Rogowski coils, a combination of the coil and the Janitza measurement transducer "RCM 201-ROGO" is always necessary! Additionally a 24 V DC power supply is needed.

The combination of the coil and the measurement transducer is not compatible with the RCM 202-AB.

Item numbers 1503622-1503626 have a four-pole connector and are required for use with the RCM 201-ROGO.



TECHNICAL DATA

RCM 201-ROGO	
ITEM NO.	**1503629**
Dimensions (W x H x D)	22,5 x 100 x 110 mm (0.89 x 3.94 x 4.33 in)
Weight	approx. 0.2 kg (0.44 lb)
Power supply	external, potential separated DC voltage, 24 VDC / 0.1 A
Transport and storage – Storage temperature – Relative humidity	 –40 °C to +80 °C (–40 °F – 176 °F) 0 to 90 % RH (without condensing)
Ambient conditions during operation – Operating temperature – Relative humidity	 –20 °C to +60 °C (–4 °F to 140 °F) 0 to 75 % RH (without condensing)
Operating height	0 to 2000 m (1.24 mi) above sea level
Pollution degree	2
Protection class	IP30
Connections	Screw terminal (max. 2.5 mm²)
Rogowski coil	Mini-Din 4-pole
Rated response differential current measuring ranges	2.5 A–125 A 0.5 A–25 A 0.2 A–10 A 0.1 A–5 A
Current measuring range setting	Manually using the key (> 3 sec) or Modbus (measuring range selection via micro-controller and PGA)
Signal and alarm output test	Manually using the key (> 6 sec) or Modbus
Operation and measuring range display	Measuring range display: LED green Measuring range selection: LED yellow Signal output: LED yellow Alarm output: LED red
Nominal input voltage	100 µV / A
Current output	0–40 mA ~
Max. current output for load = 0 Ω	70 mA ~
Overload current (duration)	50 kA
Overload current (max. 1s)	100 kA
Transmission error	40 Hz to 60 Hz < 2 % 60 Hz to 5 kHz < 5 %
Rated frequency	40 Hz to 5 kHz
Load (40 mA output)	0–10 Ω
Operation lock	via Modbus

OUTPUTS POTENTIAL-FREE (OPTO) (PROGRAMMING VIA MODBUS)	TRANSISTOR OUTPUT 24 VDC / 100 mA
Alarm output	Alarm normal (NO) Alarm inverted (NC)
Alarm output functions	Residual current level Measuring loop circuit Overtemperature Undervoltage (24 V) Internal error
Response differential current, alarm output	10 %–100 % (1 % steps)
Response time alarm output	10 sec (1 sec–255 sec)
Signal output functions	Residual current level normal (NO) Residual current inverted (NC)
Response residual current Signal output	10 %–100 % (1 % steps)
Signal output response time	5 sec (1 sec–255 sec)
Hysteresis response differential current level alarm output & signal output	5 % (0–30 %)

INTERFACE	RS485 (ELECTRICALLY ISOLATED)
Communication protocol	Modbus RTU
Baud rate	9600–250000; programmable via Modbus
Address	1 (1–255); programmable via Modbus

MID ENERGY METER AND MEASUREMENT SYSTEM

COMMUNICATION
- Modbus
- M-Bus
- S0 pulse outputs

CERTIFICATION
- MID certified

ENERGY MANAGEMENT
- Cost center analysis
- Measuring transducer for PLC control or building management systems (BMS)
- Billing purposes
- Alarm function

MEASURING ACCURACY
- Class 1 for active energy

MEASURED VALUES
- Active energy & reactive energy
- Active power & reactive power

TAMPER-PROOF
- Lead-sealed terminal cover

ALTERNATING CURRENT METER B21
- Single-phase (1 + N)
- Direct connection up to 65 A
- Width: 2 DIN modules

THREE-PHASE METER B23
- Three-phase (3 + N)
- Direct connection up to 65 A
- For 3- and 4-wire connection
- Width: 4 DIN modules

TRANSFORMER METER B24
- Three-phase (3 + N)
- CT transformer connection, 1(6) A
- Transformer ratio freely configurable up to 9999/1-6
- For 3- and 4-wire connection
- Width: 4 DIN modules

MID Energy Meters



CERTIFICATION

MID certified

COMMUNICATION

Optionally as M-Bus
or Modbus

ENERGY MANAGEMENT

Legally valid billing &
acquisition for the BesAr

MID ENERGY METER B21 – ALTERNATING CURRENT METER, 65 A

- Alternating current meter, single-phase (1 + N)
- Direct connection up to 65 A
- With measured values and alarm function
- Width: 2 DIN modules
- Tested and approved according to MID*1 and IEC
- Pulse output included



*1 *In Switzerland, different regional requirements apply in connection with MID energy meters.*

TECHNICAL DATA

MID ENERGY METER B 21 – ALTERNATING CURRENT METER, 65 A							
VOLTAGE V	ACCURACY CLASS	INPUTS/OUTPUTS	COMMUNICATION	TYPE	HORIZONTAL PITCH	WEIGHT IN kg	ITEM NO.
1 x 230 V AC	Active energy: B (Class 1) Reactive energy: Class 2	2 outputs, 2 inputs	Pulse output	B21 311-10J	2 HP	0.14	**1401353**
			Pulse output, RS-485	B21 312-10J	2 HP	0.15	**1401354**
			Pulse output, M-Bus	B21 313-10J	2 HP	0.15	**1401355**

DIMENSIONED DRAWING

All dimensions in mm

Front view

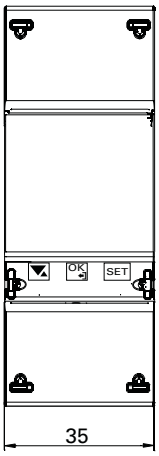

Requires 2 HP (Horizontal pitch)

Side view

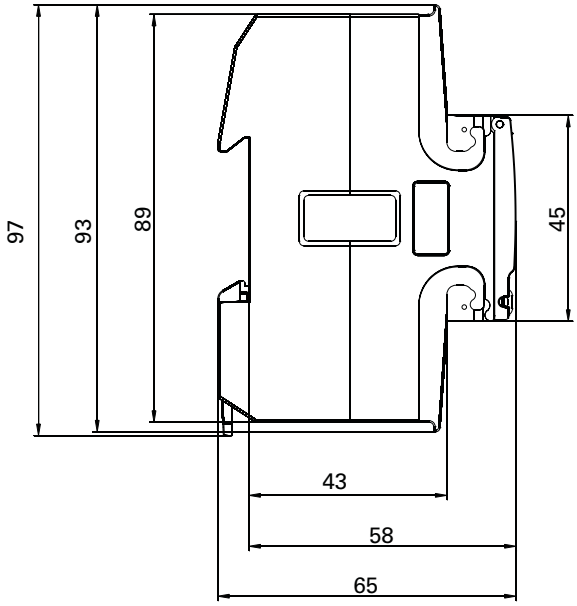

CONNECTION EXAMPLE

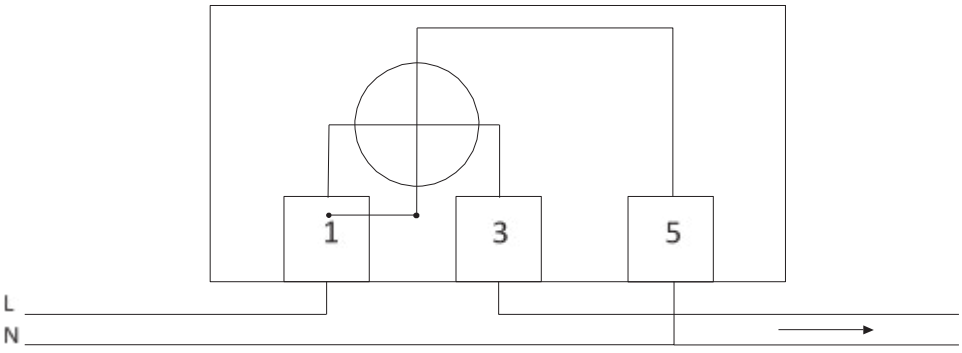

Fig.: 2-wire connection / 1 measuring unit

DIMENSIONED DRAWING

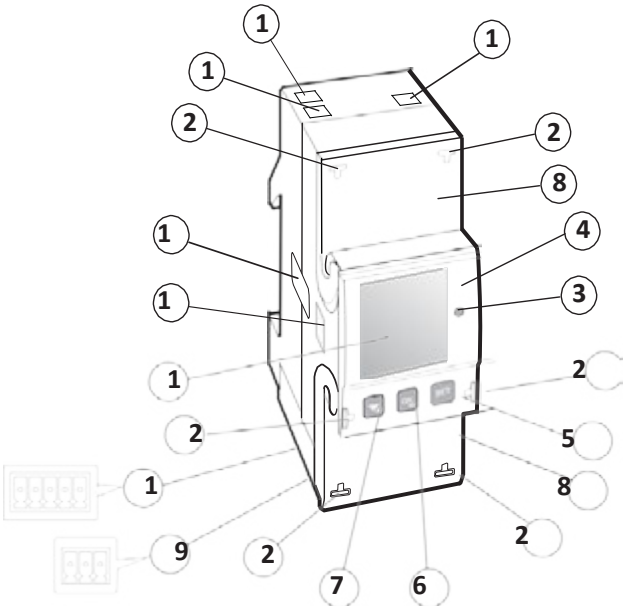

NO.	DESCRIPTION	FUNCTION
1	Connecting terminals	Electrical connections
2	Sealing eyelets	For sealing the connection terminals
3	LED	Flashes proportionally to the measured energy
4	Product data/label	Contains information about the meter
5	SET button	For calling up the configuration mode
6	OK button	For confirming the selection and menu entries. Short button press: Confirm selection Long button press: Back to previous menu or change between standard and main menu
7	UP/DOWN button	For selecting a menu entry Shorter button press: Down or forwards Long button press: Up or back
8	Cover can be lead-sealed	Protective cover for printed connection diagram on the inside
9	Plug-in terminal for communication interfaces	Depending on meter type RS-485 (Modbus RTU) or M-Bus
10	Plug-in terminal for inputs and outputs	
11	LC display	For displaying the energy and measured values
12	Optical infrared interface (IR)	Only for internal use!
13	Device seal	On both sides of the meter for protection against unauthorised opening of the meter

MID ENERGY METER B23 – THREE-PHASE METER, 65 A

- Three-phase meter, three-phase (3 + N)
- Direct connection up to 65 A
- With measured values and alarm function
- For 3- and 4-wire connection
- Width: 4 DIN modules
- Tested and approved according to MID*1 and IEC
- Pulse output included



**1 In Switzerland, different regional requirements apply in connection with MID energy meters.*

TECHNICAL DATA

MID ENERGY METER B 23 – THREE-PHASE CURRENT METER, 65 A							
VOLTAGE V	ACCURACY CLASS	INPUTS/OUTPUTS	COMMUNICATION	TYPE	HORIZONTAL PITCH	WEIGHT IN kg	ITEM NO.
3 x 230/400 VAC	Active energy: B (Class 1) Reactive energy: Class 2	2 outputs, 2 inputs	Pulse output	B23 311-10J	4 HP	0.33	**1401356**
			Pulse output, RS-485	B23 312-10J	4 HP	0.34	**1401357**
			Pulse output, M-Bus	B23 313-10J	4 HP	0.35	**1401358**

DIMENSIONED DRAWING

All dimensions in mm

Front view

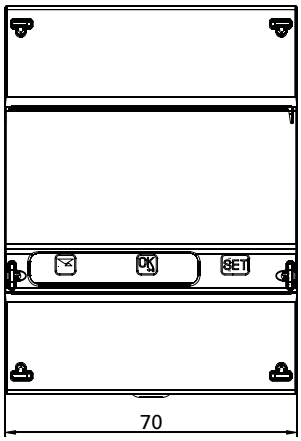

Requires 4 HP (Horizontal pitch)

Side view

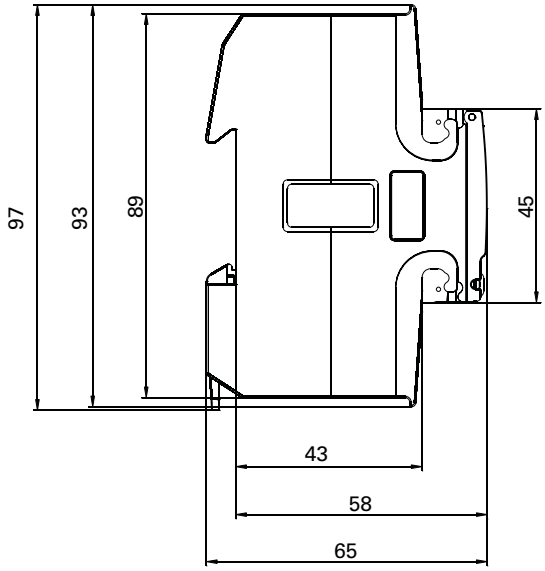

CONNECTION EXAMPLE

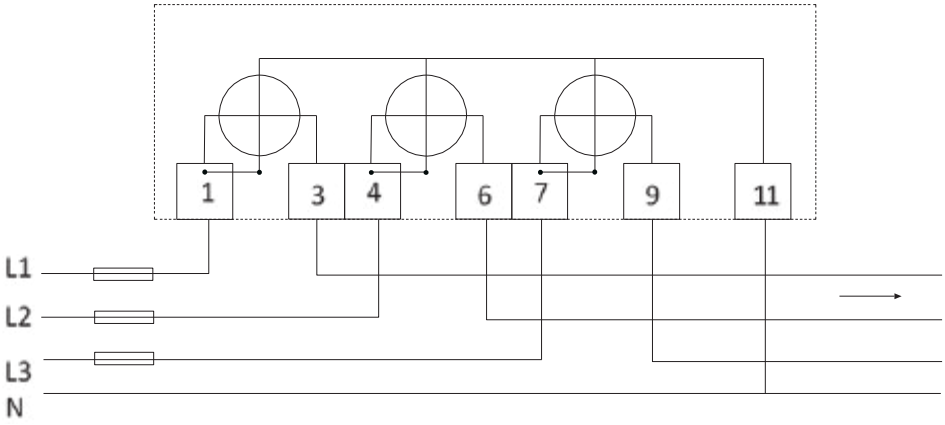

Fig.: 4-wire connection / 3 measuring units

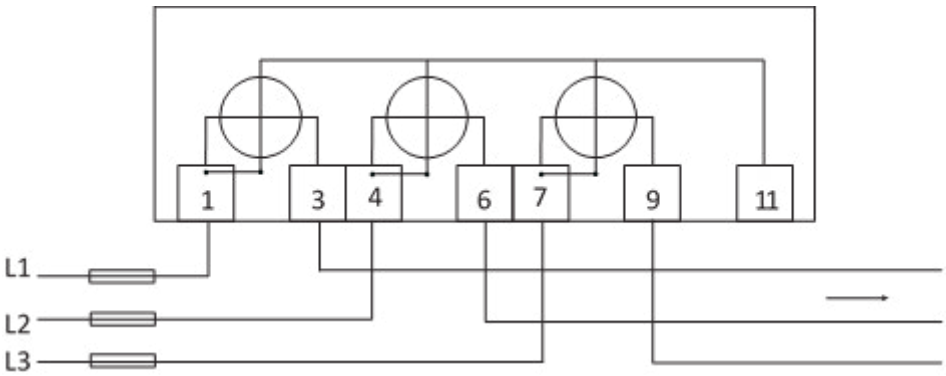

Fig.: 3-wire connection / 2 measuring units

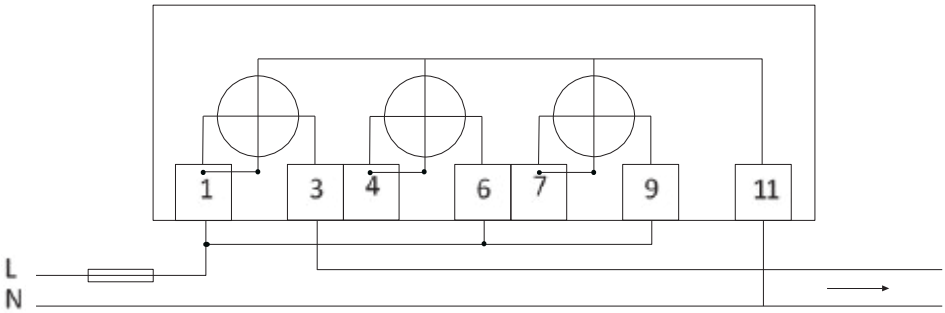

Fig.: 2-wire connection / 1 measuring unit

DIMENSIONED DRAWING

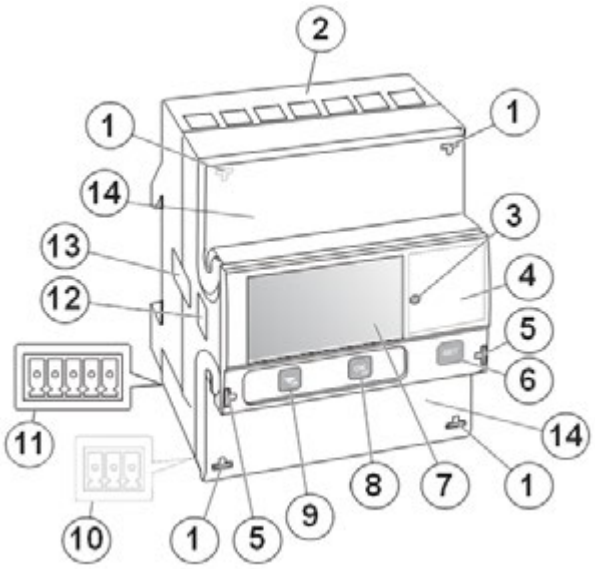

NO.	DESCRIPTION	FUNCTION
1	Sealing eyelets	For sealing the connection terminals
2	Connecting terminals	Electrical connections
3	LED	Flashes proportionally to the measured energy
4	Product data/label	Contains information about the meter
5	Sealing eyelets	For sealing the front flap
6	SET button	For calling up the configuration mode
7	LC display	For displaying the energy and measured values
8	OK button	For confirming the selection and menu entries. Short button press: Confirm selection Long button press: Back to previous menu or change between standard and main menu
9	UP/DOWN button	For selecting a menu entry Shorter button press: Down or forwards Long button press: Up or back
10	Plug-in terminal for communication interfaces	Depending on meter type RS-485 (Modbus RTU) or M-Bus
11	Plug-in terminal for inputs and outputs	
12	Optical infrared interface (IR)	Only for internal use!
13	Device seal	On both sides of the meter for protection against unauthorised opening of the meter
14	Cover can be lead-sealed	Protective cover for printed connection diagram on the inside

MID ENERGY METER B24 – TRANSFORMER METER, 6 A

- Transformer meter, three-phase (3 + N)
- CT transformer connection, 1(6) A
- Transformer ratio freely configurable up to 9999/1-6
- With measured values and alarm function
- For 3- and 4-wire connection
- Width: 4 DIN modules
- Tested and approved according to MID*1 and IEC
- Pulse output included

**1 In Switzerland, different regional requirements apply in connection with MID energy meters.*



TECHNICAL DATA

MID ENERGY METER B 23 – THREE-PHASE CURRENT METER, 65 A							
VOLTAGE V	ACCURACY CLASS	INPUTS/OUT-PUTS	COMMUNICATION	TYPE	HORIZONTAL PITCH	WEIGHT IN kg	ITEM NO.
3 x 230/400 VAC	Active energy: B (Class 1) Reactive energy: Class 2	2 outputs, 2 inputs	Pulse output	B24 311-10J	4 HP	0.27	**1401359**
			Pulse output, RS-485	B24 312-10J	4 HP	0.27	**1401360**
			Pulse output, M-Bus	B24 313-10J	4 HP	0.29	**1401361**

DIMENSIONED DRAWING

All dimensions in mm

Front view

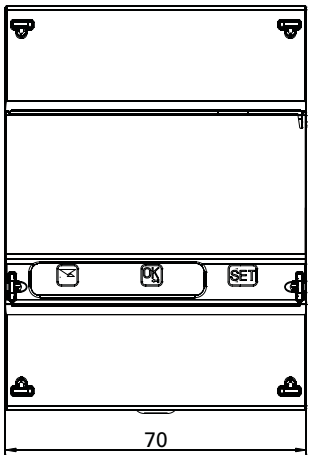

Requires 4 HP (Horizontal pitch)

Side view

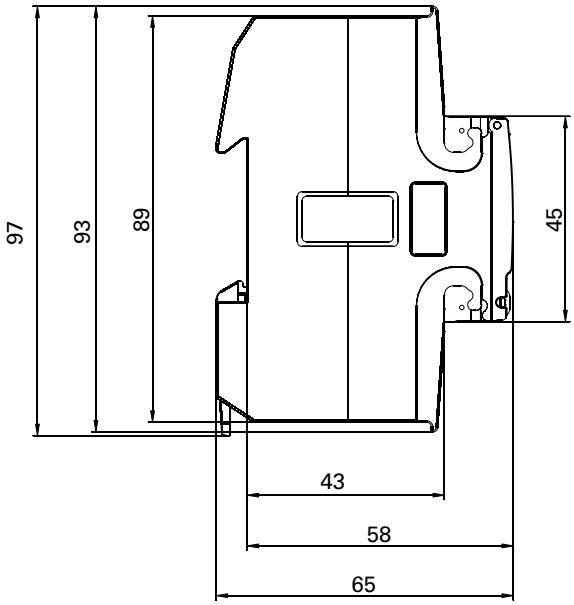

CONNECTION EXAMPLE

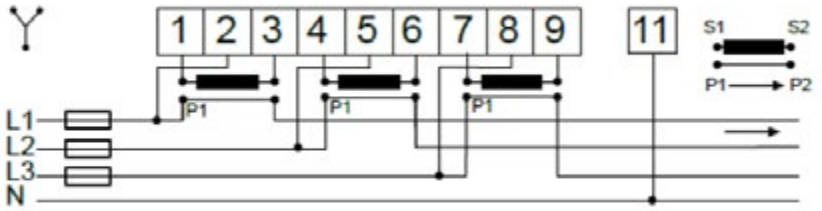

Fig.: 4-wire connection / 3 measuring units

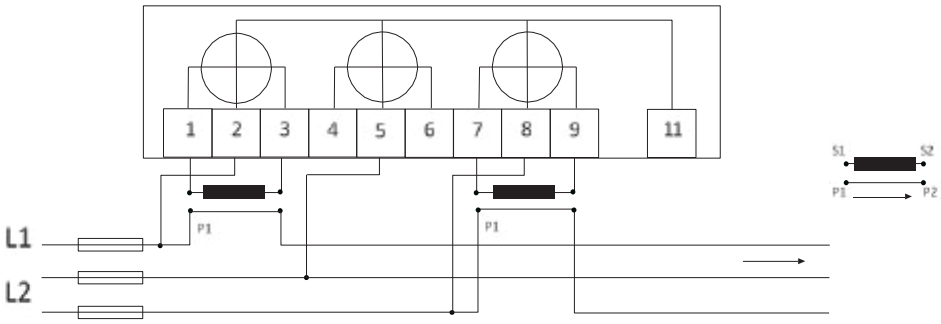

Fig.: 3-wire connection / 2 measuring units

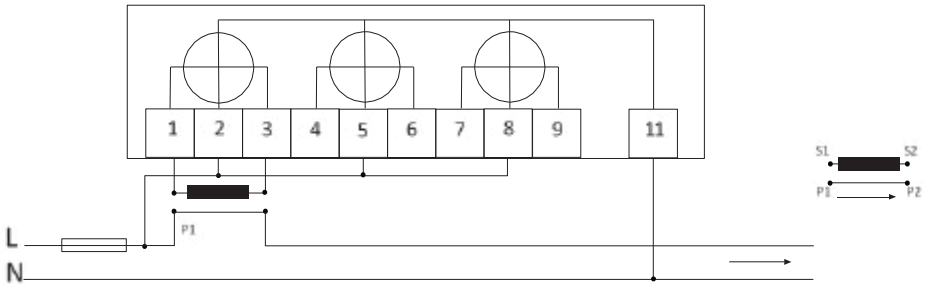

Fig.: 2-wire connection / 1 measuring unit

DIMENSIONED DRAWING

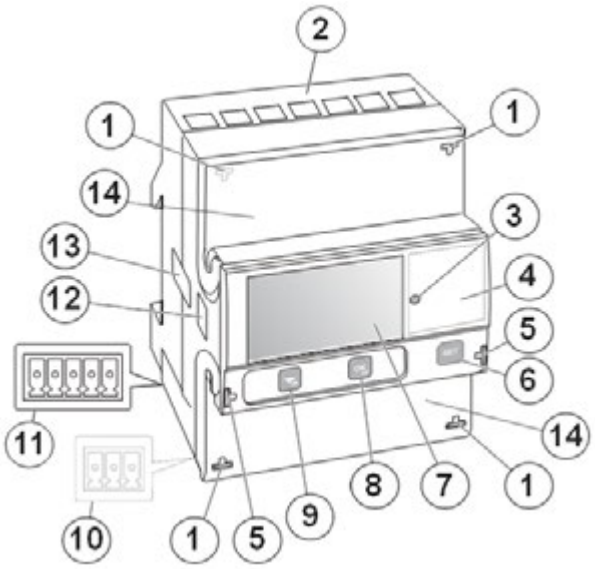

NO.	DESCRIPTION	FUNCTION
1	Sealing eyelets	For sealing the connection terminals
2	Connecting terminals	Electrical connections
3	LED	Flashes proportionally to the measured energy
4	Product data/label	Contains information about the meter
5	Sealing eyelets	For sealing the front flap
6	SET button	For calling up the configuration mode
7	LC display	For displaying the energy and measured values
8	OK button	For confirming the selection and menu entries. Short button press: Confirm selection Long button press: Back to previous menu or change between standard and main menu
9	UP/DOWN button	For selecting a menu entry Shorter button press: Down or forwards Long button press: Up or back
10	Plug-in terminal for communication interfaces	Depending on meter type RS-485 (Modbus RTU) or M-Bus
11	Plug-in terminal for inputs and outputs	
12	Optical infrared interface (IR)	Only for internal use!
13	Device seal	On both sides of the meter for protection against unauthorised opening of the meter
14	Cover can be lead-sealed	Protective cover for printed connection diagram on the inside

MID Energy Meters



TECHNICAL DATA

	B21 alternating current meter	B23 three-phase meter	B24 Transformer meter
VOLTAGE/CURRENT INPUTS			
Nominal voltage	230 VAC	3 x 230/400 VAC	3 x 230/400 VAC
Voltage range	220 – 240 V AC (–20 % – +15 %)	3 x 220 – 240 VAC (–20 % – +15 %)	3 x 220 – 240 VAC (–20 % – +15 %)
Power dissipation of voltage circuits	1.0 VA (0.4 W) total	1.6 VA (0.7 W) total	1.6 VA (0.7 W) total
Power dissipation, circuits	0.007 VA (0.007 W) at 230 V AC and I_b	0.007 VA (0.007 W) per phase at 230 V AC and I_b	0.007 VA (0.007 W) per phase at 230 V AC and I_b
Reference current I_{ref}	5 A	5 A	1 A
Transient current I_{tr}	0.5 A	0.5 A	0.50 A
Maximum current I_{max}	65 A	65 A	6 A
Minimum current I_{min}	0.25 A	0.25 A	0.02 A
Starting current I_{st}	< 20 mA	< 20 mA	< 1 mA
Connection cross section	1 – 25 mm^2	1 – 25 mm^2	0.5 – 10 mm^2
Recommended tightening torque	3 Nm	3 Nm	1.5 Nm
TRANSFORMER RATIOS			
Configurable current ratio (CT)	–	–	9999/1-6
PULSE DISPLAY (LED)			
Pulse frequency	1000 pls/kWh	1000 pls/kWh	5000 pls/kWh
Pulse length	40 ms	40 ms	40 ms
GENERAL INFORMATION			
Frequency	50 or 60 Hz ±5 %	50 or 60 Hz ±5 %	50 or 60 Hz ±5 %
Accuracy class	B (Cl. 1) and reactive energy Cl. 2	B (Cl. 1) and reactive energy Cl. 2	B (Cl. 1) and reactive energy Cl. 2
Active energy	1 %	1 %	0.5 %, 1 %
Energy display	LCD with 6 digits	LCD with 7 digits	LCD with 7 digits
ENVIRONMENT			
Operating temperature	–40 °C – +70 °C	–40 °C – +70 °C	–40 °C – +70 °C
Storage temperature	–40 °C – +85 °C	–40 °C – +85 °C	–40 °C – +85 °C
Humidity	75 % annual average, 95 % on 30 days/year	75 % annual average, 95 % on 30 days/year	75 % annual average, 95 % on 30 days/year
Fire and heat resistance	Terminal 960 °C, Cover 650 °C (IEC 60695-2-1)	Terminal 960 °C, Cover 650 °C (IEC 60695-2-1)	Terminal 960 °C, Cover 650 °C (IEC 60695-2-1)
Water and dust resistance	IP20 on terminal blocks without protective housing and IP51 in protective housing, according to IEC 60529	IP20 on terminal blocks without protective housing and IP51 in protective housing, according to IEC 60529	IP20 on terminal blocks without protective housing and IP51 in protective housing, according to IEC 60529
Mechanical environment	Class M1 according to Measuring Instrument Directive (MID), (2004/22/EC)	Class M1 according to Measuring Instrument Directive (MID), (2004/22/EC)	Class M1 according to Measuring Instrument Directive (MID), (2004/22/EC)
Electromagnetic environment	Class E2 according to Measuring Instrument Directive (MID), (2004/22/EC)	Class E2 according to Measuring Instrument Directive (MID), (2004/22/EC)	Class E2 according to Measuring Instrument Directive (MID), (2004/22/EC)

	B21 alternating current meter	B23 three-phase meter	B24 Transformer meter
DIGITAL OUTPUT			
Current	2 – 100 mA	2 – 100 mA	2 – 100 mA
Voltage	24 V AC – 240 V AC, 24 V DC – 240 V DC For meters with only 1 output, 5 – 40 V DC	24 V AC – 240 V AC, 24 V DC – 240 V DC For meters with only 1 output, 5 – 40 V DC	24 V AC – 240 V AC, 24 V DC – 240 V DC For meters with only 1 output, 5 – 40 V DC
Output pulse frequency	Programmable: 1 - 999999 pls/kWh, pls/MWh	Programmable: 1 - 999999 pls/kWh, pls/MWh	Programmable: 1 - 999999 pls/kWh, pls/MWh
Pulse length	10 – 990 ms	10 – 990 ms	10 – 990 ms
Connection cross section	0.5 – 1 mm^2	0.5 – 1 mm^2	0.5 – 1 mm^2
Recommended tightening torque	0.25 Nm	0.25 Nm	0.25 Nm
DIGITAL INPUTS			
Voltage	0 – 240 V AC/DC	0 – 240 V AC/DC	0 – 240 V AC/DC
OFF	0 – 12 V AC/DC	0 – 12 V AC/DC	0 – 12 V AC/DC
ON	57 – 240 VAC/24 – 240 VDC	57 – 240 VAC/24 – 240 VDC	57 – 240 VAC/24 – 240 VDC
Minimum pulse length	30 ms	30 ms	30 ms
Connection cross section	0.5 – 1 mm^2	0.5 – 1 mm^2	0.5 – 1 mm^2
Recommended tightening torque	0.25 Nm	0.25 Nm	0.25 Nm
ELECTROMAGNETIC COMPATIBILITY			
Surge voltage test	6 kV 1.2/50 µs (IEC 60060-1)	6 kV 1.2/50 µs (IEC 60060-1)	6 kV 1.2/50 µs (IEC 60060-1)
Voltage swell test	4 kV 1.2/50 µs (IEC 61000-4-5)	4 kV 1.2/50 µs (IEC 61000-4-5)	4 kV 1.2/50 µs (IEC 61000-4-5)
Conducted transient	4 kV (IEC 61000-4-4)	4 kV (IEC 61000-4-4)	4 kV (IEC 61000-4-4)
Interference immunity to electromagnetic RF fields	80 MHz – 2 GHz (IEC 61000-4-6)	80 MHz – 2 GHz (IEC 61000-4-6)	80 MHz – 2 GHz (IEC 61000-4-6)
Interference immunity to conducted disturbances	150 kHz – 80 MHz (IEC 61000-4-6)	150 kHz – 80 MHz (IEC 61000-4-6)	150 kHz – 80 MHz (IEC 61000-4-6)
Interference immunity with harmonics	2 kHz – 150 kHz	2 kHz – 150 kHz	2 kHz – 150 kHz
High frequency emissions	EN 55022, Class B (CISPR22)	EN 55022, Class B (CISPR22)	EN 55022, Class B (CISPR22)
Electrostatic discharge	15 kV (IEC 61000-4-2)	15 kV (IEC 61000-4-2)	15 kV (IEC 61000-4-2)
Standards	IEC 62052-11, IEC 62053-21 Class 1 & 2, IEC 62053-22 Class 0.5S, IEC 62053-23 Class 2, IEC 62054-21, GB/T 17215.211-2006, GB/T 17215.312-2008 Class 1 & 2, GB/T 1725.322-2008 Class 0.5S, GB 4208-2008, EN 50470-3 Category A, B & C		
MECHANICAL			
Material	Polycarbonate in transparent front glass, lower and upper housing and terminal cover		
DIMENSIONS	**35 X 97 X 65 MM (W X H X D)**	**70 X 97 X 65 MM (W X H X D)**	**70 X 97 X 65 MM (W X H X D)**
DIN modules	2	4	4

MID ENERGY METERS – EMD-SERIES TO 480 V TN/TT

- Energy meter, single-phase (1 + N) and three-phase (3 + N)
- With measured values and alarm function
- Width: 2 DIN modules and 4 DIN modules
- Tested and approved according to MID*1, IEC and UL
- Pulse output included



*1 *In Switzerland, different regional requirements apply in connection with MID energy meters.*

MID ENERGY METERS EMD-SERIES – TECHNICAL DATA

MID ENERGY METERS EMD-SERIES				
TYPE		**DIMENSIONS IN mm (B X H X T)**	**WEIGHT IN kg**	**ITEM NO. *1**
EMD 485-P1	AC meter, 1-phase, 100 A (Modbus)	36 x 99 x 66	0.13	**1401501**
EMD 485-P3	Three-phase meter, 3-phase, 100 A (Modbus)	70 x 100 x 66	0.35	**1401502**
EMD 485-CT3-A	Measuring transformer meter, 3-phase, 1/5 A (Modbus)	70 x 100 x 66	0.28	**1401503**

*1 UL certification included.

MID ENERGY METERS EMD 485-P1 – DIMENSIONED DRAWING

All dimensions in mm

Side view

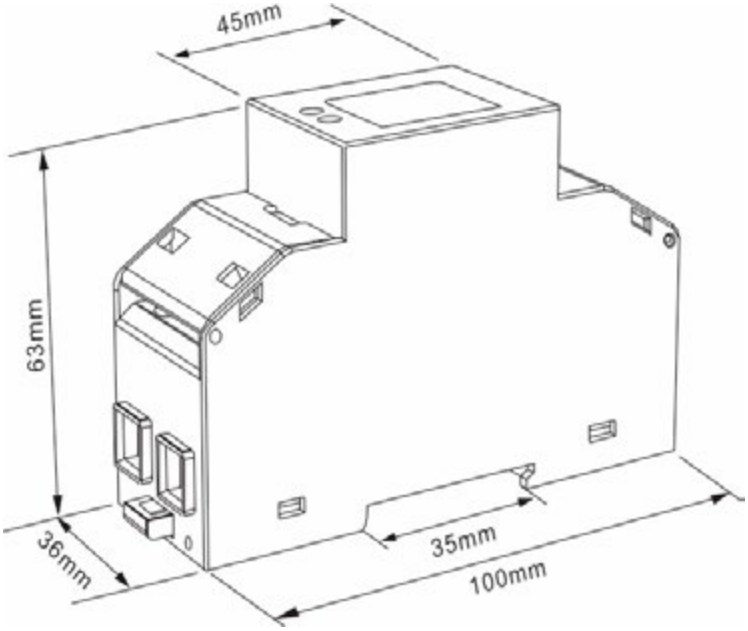

Requires 2 HP (Horizontal pitch)

MID ENERGY METERS EMD 485-P1 – CONNECTION EXAMPLE

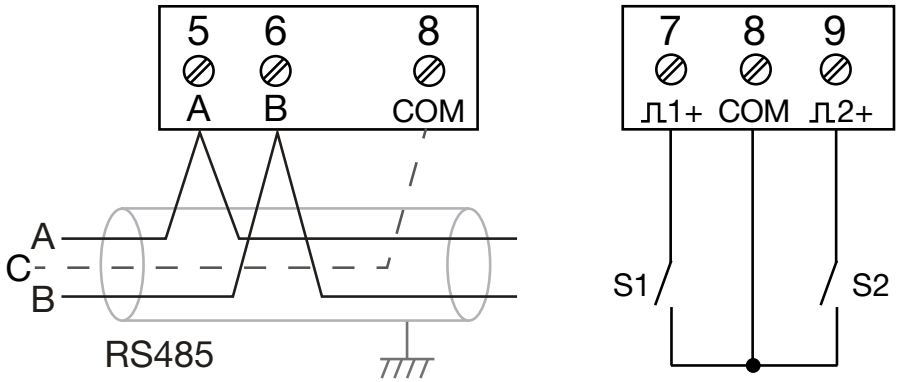

Fig.: Connection of RS485 and digital inputs

MID ENERGY METERS EMD 485-P3 – DIMENSIONED DRAWING

All dimensions in mm

Front view

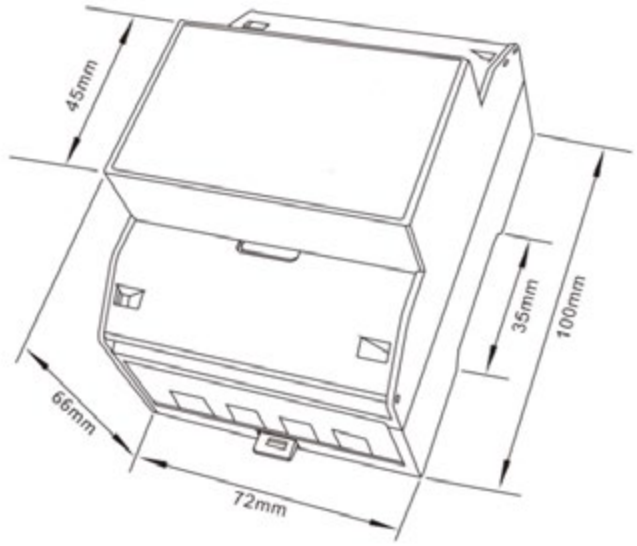

Requires 4 HP (Horizontal pitch)

MID ENERGY METERS EMD 485-P3 – CONNECTION EXAMPLE

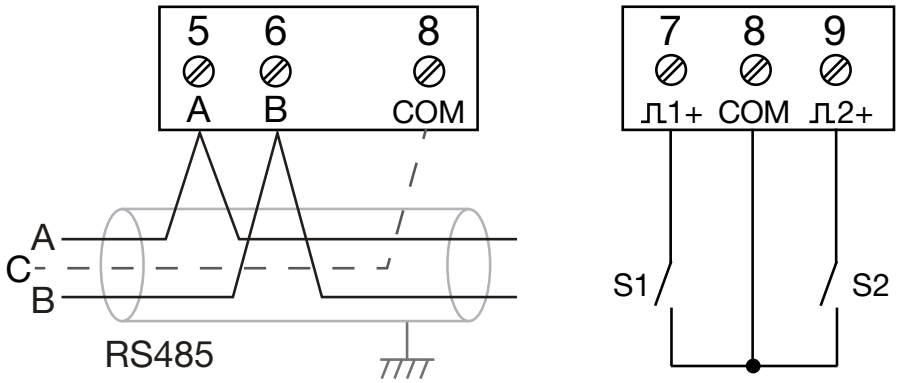

Fig.: Connection of RS485 and digital inputs

MID ENERGY METERS EMD 485-CT3A – DIMENSIONED DRAWING

All dimensions in mm

Side view

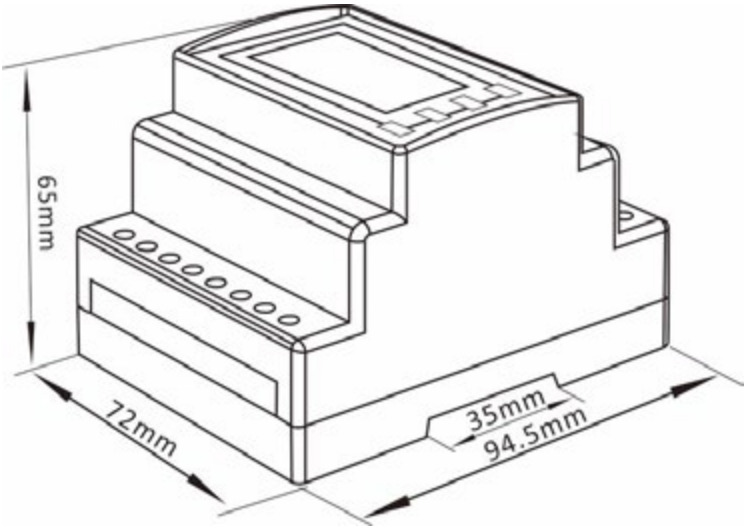

Requires 4 HP (Horizontal pitch)

MID ENERGY METERS EMD 485-CT3A – CONNECTION EXAMPLE

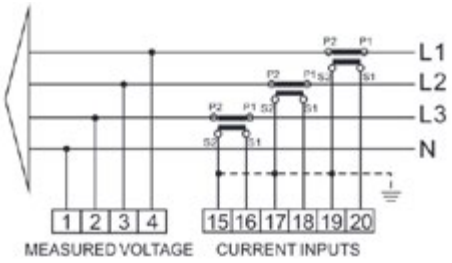

Fig.: Three-phase four-wire (3p4w)

MID ENERGY METERS EMD 485-CT3A – CONNECTION EXAMPLE

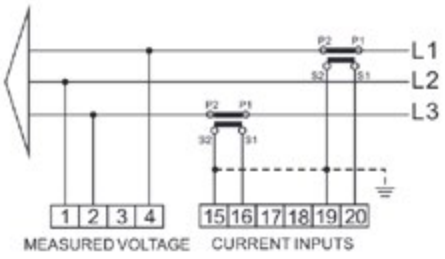

Fig.: Three-phase three-wire (3p3w)

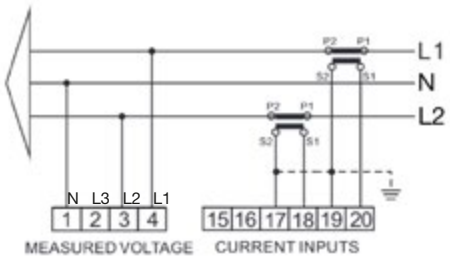

Fig.: Single-phase (split-phase) three-wire (1p3w)

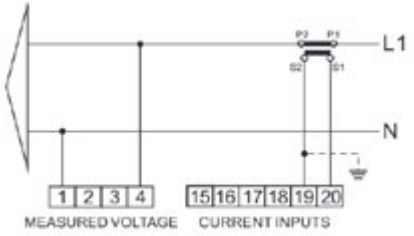

Fig.: Single-phase two-wire (1p2w)

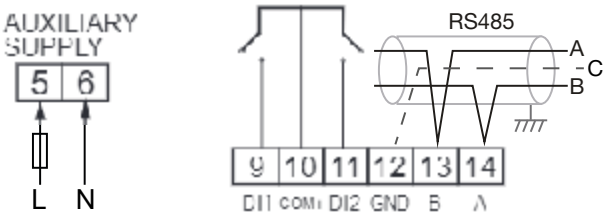

Fig.: Supply and communication connections

TECHNICAL DATA

	EMD 485-P1	EMD 485-P3	EMD 485-CT3A
GENERAL			
Certificates	Calibrated according to Measuring Instruments Directive (MID). Approved according to IEC, UL*, FCC, ANSI C12.20 Class 0.2.		
Measures and displays	Voltages and THD%*[1] of all phases, grid frequency Current, current demand*[1], and current THD%*[1] of all phases Active, reactive, and apparent power Maximum power demand and power factor Bidirectional measurement of imported and exported active/reactive energy Total active and reactive energy		
Net weight, approx.	0.13	0.35	0.28
Width of the device in horizontal pitches (1 HP = 18 mm)	2 HP	4 HP	4 HP
Power consumption, approx.	1 W	1 W	1 W
Fuse, external	100 A recommended	100 A recommended	1 A / 300 V AC fast
Warm-up time	5 s	5 s	1 min
Backlight service life	10 years (50% of the start brightness)		
Inputs/Outputs	2 digital inputs (counters), 1 optical pulse output LED for total kWh		
Material	self-extinguishing UI94 V-0		
TRANSPORTATION AND STORAGE The following specifications apply for devices transported and stored in the original packaging.			
Free fall	1 m (39.37 in)		
Shock	up to 30 kg of shock to the front, back and sides		
Temperature	-40 °C (-40 °F) .. +70 °C (158 °F)		
Relative air humidity	0 .. 90%, no condensation		
ENVIRONMENTAL CONDITIONS			
Use	For weather-protected and stationary use. Protection class II according to IEC 60536 (VDE 0106, Part 1).		
Rated temperature range	-40 °C (-40 °F) .. +70 °C (158 °F)		
Relative air humidity	0 .. 90%, no condensation		
Operating elevation	0–2000 m (6562 ft) above sea level		
Pollution degree	2		
Mounting orientation	DIN rail 35 mm (DIN EN 60715), upright		
Ventilation	No forced ventilation required		
Water and dust resistance	IP51 on terminal blocks without protective housing and IP51 in protective housing, according to IEC 60529	IP20 on terminal blocks without protective housing and IP51 in protective housing, according to IEC 60529	IP20 on terminal blocks without protective housing and IP51 in protective housing, according to IEC 60529
Vibration	10 .. 50 Hz, IEC 60068-2-6, 2g		
AUXILIARY SUPPLY			
Nominal range	No auxiliary supply required		AC 100 V .. 480 V (50/60 Hz) or DC 120 V .. 424 V
Terminal connection capacity	–	–	2 .. 5 mm² stranded wire (AWG14)
COMMUNICATION – RS485 PORT FOR MODBUS RTU			
The following RS485 communication parameters can be configured from the setup menu:			
Baud rate (bps)	2400, 4800, 9600, 19200, 38400, 115200 (Standard: 9600)		
Parity	none (default)/odd/even		
Stop bits	1 (default) or 2		
RS485 network address	3-digit number, 001 .. 247		
Modbus word order	The normal byte order is high byte/low byte (“big-endian”, not configurable). The device can also set itself to “little-endian” by automatic detection.		

** UL certification only for item no.: 1401501, 1401502 and 140503*
**1 Not available on EMD 485-P1*

VOLTAGE MEASUREMENT			
Nominal voltage	230 V AC	230 / 400 V AC	230 / 400 V AC
Measuring range L-N	100 .. 277 V AC	100 .. 277 V AC	100 .. 277 V AC
Measuring range L-N (3p3w)	–	100 .. 480 V AC	100 .. 480 V AC
Supported grid systems	1p2w	3p3w, 3p4w 1p2w, 1p3w	3p3w, 3p4w 1p2w, 1p3w
Measurement category (IEC 61010-1)	300 V CAT III	300 V CAT III	300 V CAT III
Settable voltage transformer ratio (prim./sek.)	–	–	1 .. 9999 / 100 .. 500
AC withstand voltage; Pulse withstand voltage	4 kV for 1 minute; 6 kV-1.2 uS waveform	4 kV for 1 minute; 6 kV-1.2 uS waveform	4 kV for 1 minute; 6 kV-1.2 uS waveform

CURRENT MEASUREMENT			
Current THD% for each phase	–	Yes	
Measuring range	0.3 .. 10 (100) Aeff	0.3 .. 10 (100) Aeff	0.05 .. 5 (6) Aeff
Maximum current	100 A	100 A	6 A
Nominal current	10 A	10 A	5 A
Minimum current	0.3 A	0.3 A	0.05 A
Starting current	0.04 A	0.04 A	–
Settable current transformer ratio (prim./sec.)	–	–	1 .. 9999 / 5 or 1
Nominal current of current transformer	–	–	5 A or 1 A
Crest factor (relative to maximum current)	10	10	1,2
Overload for 0.01 s	3000 A	3000 A	20 times the maximum current
Resolution	1 mA	1 mA	0,1 mA
Overvoltage category	III		
Rated surge voltage	4 kV		

POWER FACTOR, FREQUENCY, AND MAXIMUM DEMAND			
Frequency of fundamental oscillation	50 / 60 Hz (±10 %)		
Grid frequency measured from	L1	L1 or L3	L1 or L3
Instantaneous power: - Power - Reactive power - Apparent power	 0 .. 999999 W 0 .. 999999 VAr 0 .. 999999 VA	 0 .. 99999 W 0 .. 99999 VAr 0 .. 99999 VA	 0 .. 3600 MW 0 .. 3600 MVAr 0 .. 3600 MVA
Maximum demanded power since the last demand reset	Yes	Yes	Yes
Maximum neutral demand current since the last demand reset	–	Yes (3p4w only)	
Power factor range	–1.0 .. 1.0	–1.0 .. 1.0	
Maximum demand range	Same as power range	Same as power/current range	

ENERGY MEASUREMENTS	
Imported/exported active energy	0 .. 9999999.9 kWh
Imported/exported reactive energy	0 .. 9999999.9 kVArh
Total active energy	0 .. 9999999.9 kWh
Total reactive energy	0 .. 9999999.9 kVArh

ACCURACY

Accuracy class	MID Class C	MID Class B	
Voltage	0.5 % of the maximum range		
Current	0.5 % of the nominal current		
Frequency	0.2 % of the mid frequency		
Power factor	1 % of the unit (0.01)		
Active power (W)	±1 % of the maximum range		
Reactive power (VAr)	±1 % of the maximum range		
Apparent power (VA)	±1 % of the maximum range		
Active energy (Wh)	Class 1 - IEC 62053-21 Class C - EN 50470-3	Class 1 - IEC 62053-21 Class B - EN 50470-3	Class 0.5 IEC 62053-21 Class B - EN 50470-3
Reactive energy (VARh)	Class 2 IEC 62053-23		
Total harmonic distortion up to 31st harmonic	–	1 %	1 %
Response time to digital input (typical, to > 99 % of final reading, at 50 Hz)	100 ms	100 ms	1 s

CONNECTING CAPACITY OF THE TERMINALS

Only connect one conductor per terminal point!

Connectible conductors	Single core, multi-core, fine-stranded, wire ferrules		
Voltage/current measurement	25 mm² (AWG4)	25 mm² (AWG4)	2.5 mm² (AWG14)
Other terminals	2.5 mm² (AWG14)	2.5 mm² (AWG14)	2.5 mm² (AWG14)

REFERENCE CONDITIONS OF INFLUENCING QUANTITIES

Influencing quantities are variables that affect measurement errors to a minor degree.
Accuracy is verified under nominal value (within the specified tolerance) of these conditions.

Ambient temperature	23 °C ±2 °C	23 °C ±1 °C	23 °C ±1 °C
Input frequency	50 or 60 Hz ±2 %	50 Hz (MID) 45 .. 65 Hz (without MID)	50 or 60 Hz ±2 %
Input waveform	Sinusoidal (distortion factor < 0.005)		
Auxiliary supply voltage	–	–	Nominal ±1 %
Auxiliary supply frequency	–	–	Nominal ±1 %
Auxiliary supply waveform (if AC)	–	–	Sinusoidal (distortion factor < 0.05)
Magnetic field of external origin	Terrestrial flux		

MID Energy Meters



REMOTE READING WITH A HIGHER-LEVEL PC





Power Grid Monitoring Software GridVis®



Ethernet



UMG 509-PRO
Power quality analyzer with RCM



UMG 96-PQ-L
Modularly expandable
network analyzer

Modbus



MID energy meters
1- or 3-phase



UMG 96-PA-MID+
Modularly expandable
network analyzer



UMG 96RM
Multifunctional
power analyzer

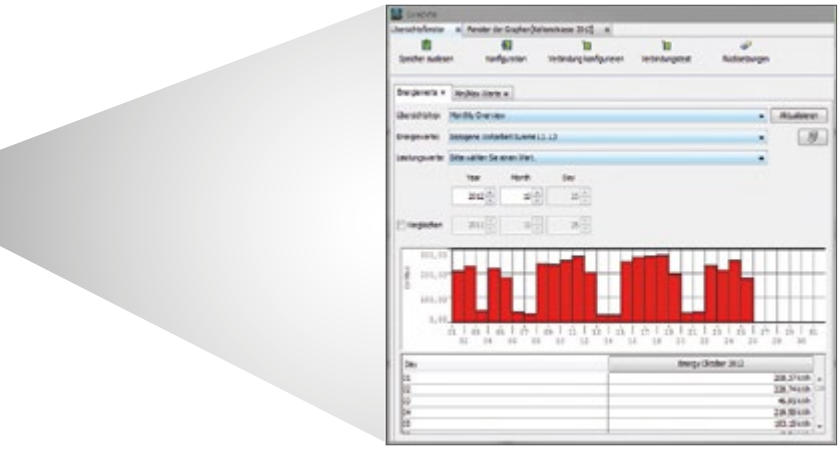

Tabular energy reports

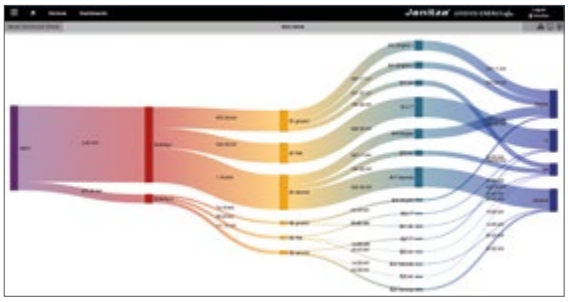

Sankey diagrams



Dashboard editor



UMG 604-PRO
Functionally expandable network analyzer



ProData® Data Logger
Gateway for energy meters

Modbus

Pulse inputs



MID energy meters
1- or 3-phase



MID energy meters
1- or 3-phase

CURRENT TRANSFORMERS



Operating current transformers
Various designs,
classes and functions



Residual current transformer
Various residual current
types and designs



Accessories
Installation, communication
and supply

CURRENT TRANSFORMERS

Current transformers

205 Operating current transformers
255 Residual current transformer
269 Accessories

THE RIGHT CURRENT TRANSFORMER FOR EVERY APPLICATION

OPERATING CURRENT TRANSFORMERS



206 Plug-in current transformers
218 Plug-in current transformers for billing purposes
222 Low-Power current transformers
232 Summation current transformer
236 Split core current transformer
240 Separable current transformers
242 Three-phase current transformers
244 DIN rail current transformers with voltage tap-off & back-up fuse
246 Compact current transformers
248 Flexible current transformers – Rogowski coil

PLUG-IN CURRENT TRANSFORMERS CLASS 1 ... / 5 A

With plug-in current transformers, the conductor to be measured is fed through the opening, which is available in various diameters. The break proof plastic housings are flame retardant and self-extinguishing.

When installing plug-in current transformers, the primary conductor is interrupted, meaning they are mainly suitable for new installations.



TECHNICAL DATA

PLUG-IN CURRENT TRANSFORMER, CLASS 1 ... / 5 A SECONDARY CURRENT

TYPE	PRIMARY CURRENT in A	RATIO	POWER in VA	PRIMARY CONDUCTOR	ROUND CONDUCTOR in mm	WIDTH in mm	WEIGHT in kg	ITEM NO.
ASK 21.3	75	75/5	2.5	20 x 10	19.2	61	0.31	**1503206**
ASK 21.3	80	80/5	2.5	20 x 10	19.2	61	0.32	**1503207**
ASK 21.3	100	100/5	3.75	20 x 10	19.2	61	0.26	**1503208**
ASK 31.5	75	75/5	1.5	30 x 10; 20 x 10	28	61	0.45	**1503270**
CTB 31.35	100	100/5	2.5	30 x 10; 25 x 12; 20 x 20	25.7	60	0.23	**1503272**
CTB 31.35	150	150/5	2.5	30 x 10; 25 x 12; 20 x 20	25.7	60	0.23	**1503273**
CTB 31.35	200	200/5	2.5	30 x 10; 25 x 12; 20 x 20	25.7	60	0.23	**1503274**
CTB 31.35	250	250/5	5	30 x 10; 25 x 12; 20 x 20	25.7	60	0.23	**1503275**
CTB 31.35	300	300/5	5	30 x 10; 25 x 12; 20 x 20	25.7	60	0.23	**1503276**
CTB 31.35	400	400/5	5	30 x 10; 25 x 12; 20 x 20	25.7	60	0.23	**1503277**
CTB 31.35	500	500/5	5	30 x 10; 25 x 12; 20 x 20	25.7	60	0.23	**1503278**
ASK 31.3	600	600/5	5	30 x 10; 20 x 20	26	61	0.25	**1503279**
CTB 41.35	800	800/5	5	40 x 10; 30 x 15	31.8	70	0.30	**1503280**
CTB 41.35	1000	1000/5	5	40 x 10; 30 x 15	31.8	70	0.30	**1503281**
CTB 51.35	1250	1250/5	5	50 x 12; 40 x 30	43.7	85	0.35	**1503282**
CTB 61.35	1500	1500/5	5	63 x 10; 50 x 30	43.7	95	0.35	**1503283**
CTB 81.35	1500	1500/5	10	80 x 10; 60 x 30	54.7	120	0.35	**1503284**
CTB 81.35	1600	1600/5	10	80 x 10; 60 x 30	54.7	120	0.35	**1503285**
CTB 81.35	2000	2000/5	10	80 x 10; 60 x 30	54.7	120	0.38	**1503286**
CTB 101.35	2500	2500/5	10	100 x 10; 80 x 30	70	130	0.40	**1503287**

ACCESSORIES

Snap-on mounting for DIN rail, suitable for design type CTB	**1502140**
Snap-on mounting for DIN rail, suitable for design type ASK 31.5	**1502141**
Snap-on mounting for DIN rail, suitable for design type ASK 21.3 / ASK 31.3	**1502151**

DIMENSIONAL DRAWINGS

ASK 21.3

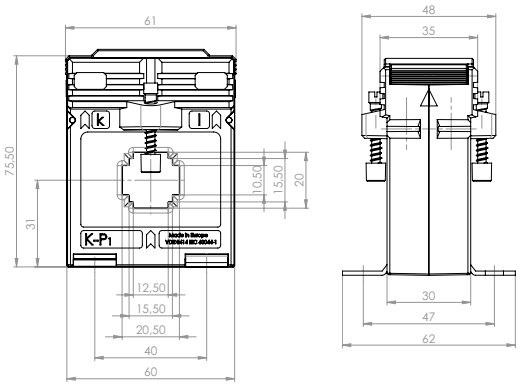

ASK 31.3

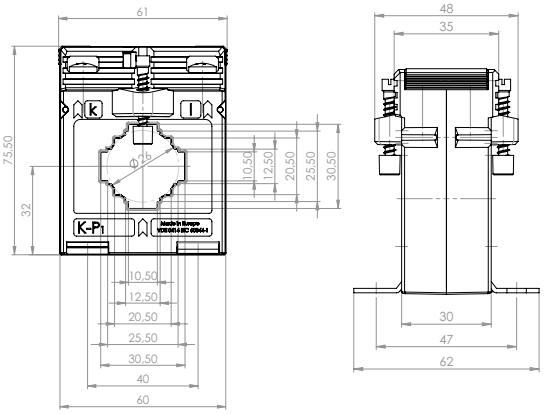

ASK 31.5

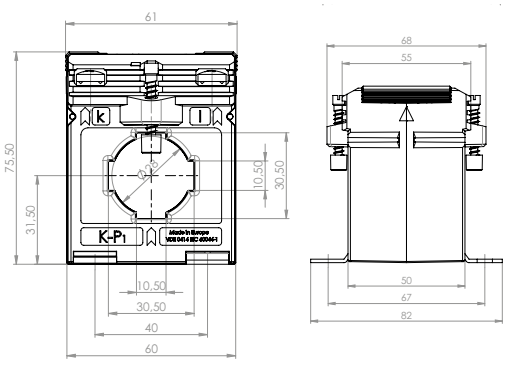

CTB 31.35

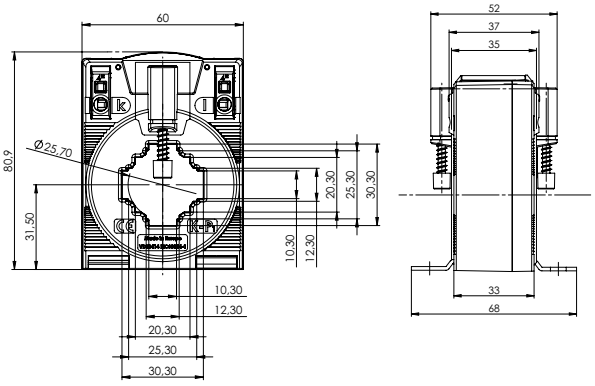

CTB 41.35

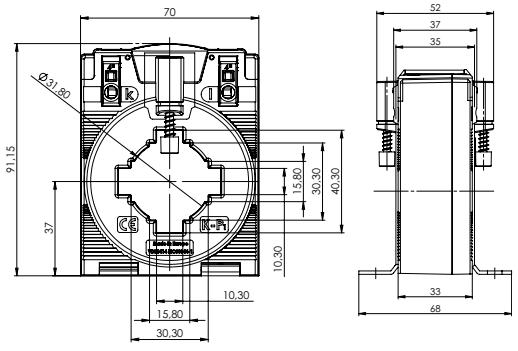

CTB 51.35

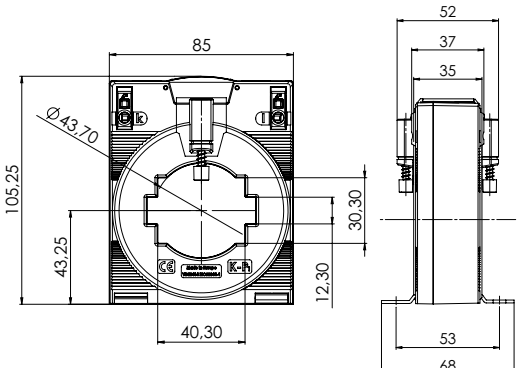

Plug-in current transformer class 1

CTB 61.35

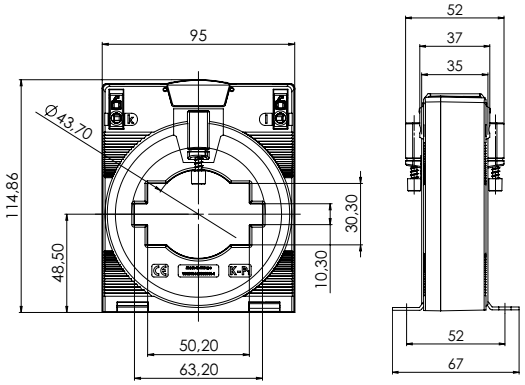

CTB 81.35

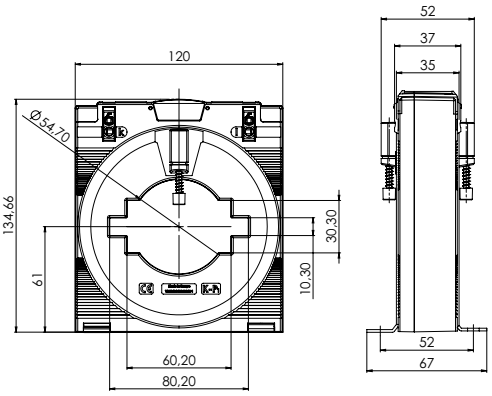

CTB 101.35

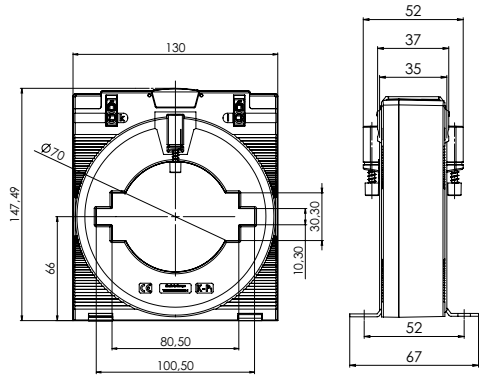



PLUG-IN CURRENT TRANSFORMER, CLASS 0,5 & 0,5S

This CTB current transformer series enables fast and secure wiring thanks to screwless connection technology with spring-loaded terminals. An innovative and time-saving connection option for solid and flexible conductors – ferrules are not required. In addition, the entire CTB series is UL-certified and designed for a maximum operating voltage of up to 1.2 kV. This means that it can be used in 690 V networks without any problems.All current transformers in this series are manufactured in accordance with the requirements of DIN EN 61869-1/2, VDE 0414-9-1/2, and DIN 42600 – and in some cases even exceed them.



TECHNICAL DATA

PLUG-IN CURRENT TRANSFORMER, CLASS 0,5

TYPE	PRIMARY CURRENT in A	SECONDARY CURRENT in A	POWER in VA	PRIMARY CONDUCTOR in mm	ROUND CONDUCTOR in mm	CONSTRUCTION WIDTH in mm	WEIGHT in kg	ITEM NO.
CTB 31.35	150	1	2,5	30 x 10; 25 x 12	25,7	60	0,29	1503700
CTB 31.35	200	1	2,5	30 x 10; 25 x 12	25,7	60	0,25	1503701
CTB 31.35	250	1	5,0	30 x 10; 25 x 12	25,7	60	0,32	1503702
CTB 31.35	300	1	5,0	30 x 10; 25 x 12	25,7	60	0,28	1503703
CTB 31.35	400	1	5,0	30 x 10; 25 x 12	25,7	60	0,27	1503704
CTB 31.35	500	1	5,0	30 x 10; 25 x 12	25,7	60	0,30	1503705
CTB 31.35	600	1	5,0	30 x 10; 25 x 12	25,7	60	0,30	1503706
CTB 41.35	500	1	5,0	40 x 10; 30 x 15	31,8	70	0,31	1503707
CTB 41.35	600	1	5,0	40 x 10; 30 x 15	31,8	70	0,31	1503708
CTB 41.35	800	1	5,0	40 x 10; 30 x 15	31,8	70	0,32	1503709
CTB 41.35	1000	1	5,0	40 x 10; 30 x 15	31,8	70	0,34	1503710
CTB 51.35	1000	1	5,0	50 x 12; 40 x 30	43,7	85	0,35	1503711
CTB 51.35	1250	1	5,0	50 x 12; 40 x 30	43,7	85	0,36	1503712
CTB 61.35	1500	5	10,0	63 x 10; 50 x 30	43,7	95	0,42	1503713
CTB 61.35	1500	1	5,0	63 x 10; 50 x 30	43,7	95	0,45	1503714
CTB 81.35	1500	5	10,0	80 x 10; 60 x 30	54,7	120	0,48	1503715
CTB 81.35	1600	5	5,0	80 x 10; 60 x 30	54,7	120	0,50	1503716
CTB 81.35	2000	5	10,0	80 x 10; 60 x 30	54,7	120	0,57	1503717
CTB 101.35	2500	5	10,0	100 x 10; 80 x 30	70,0	130	0,66	1503718

ACCESSORIES

Snap-on mounting for DIN rail, suitable for design type CTB 31.35 / CTB 41.35	1502140

TECHNICAL DATA

PLUG-IN CURRENT TRANSFORMER, CLASS 0,5S

TYPE	PRIMARY CURRENT in A	SECONDARY CURRENT in A	POWER in VA	PRIMARY CONDUCTOR in mm	ROUND CONDUCTOR in mm	CONSTRUCTION WIDTH in mm	WEIGHT in kg	ITEM NO.
CTB 31.35	150	1	2,5	30 x 10; 25 x 12	25,7	60	0,23	**1503719**
CTB 31.35	200	1	2,5	30 x 10; 25 x 12	25,7	60	0,28	**1503720**
CTB 31.35	250	1	5,0	30 x 10; 25 x 12	25,7	60	0,28	**1503721**
CTB 31.35	300	1	5,0	30 x 10; 25 x 12	25,7	60	0,28	**1503722**
CTB 31.35	400	1	5,0	30 x 10; 25 x 12	25,7	60	0,28	**1503723**
CTB 31.35	500	1	5,0	30 x 10; 25 x 12	25,7	60	0,29	**1503724**
CTB 31.35	600	1	5,0	30 x 10; 25 x 12	25,7	60	0,30	**1503725**
CTB 41.35	500	1	5,0	40 x 10; 30 x 15	31,8	70	0,30	**1503726**
CTB 41.35	600	1	5,0	40 x 10; 30 x 15	31,8	70	0,31	**1503727**
CTB 41.35	800	1	5,0	40 x 10; 30 x 15	31,8	70	0,33	**1503728**
CTB 41.35	1000	1	5,0	40 x 10; 30 x 15	31,8	70	0,35	**1503729**
CTB 51.35	1000	1	5,0	50 x 12; 40 x 30	43,7	85	0,38	**1503730**
CTB 51.35	1250	1	5,0	50 x 12; 40 x 30	43,7	85	0,38	**1503731**
CTB 61.35	1500	5	10,0	63 x 10; 50 x 30	43,7	95	0,43	**1503732**
CTB 61.35	1500	1	5,0	63 x 10; 50 x 30	43,7	95	0,49	**1503733**
CTB 81.35	1500	5	10,0	80 x 10; 60 x 30	54,7	120	0,57	**1503734**
CTB 81.35	1600	5	5,0	80 x 10; 60 x 30	54,7	120	0,57	**1503735**
CTB 81.35	2000	5	10,0	80 x 10; 60 x 30	54,7	120	0,64	**1503736**
CTB 101.35	2500	5	10,0	100 x 10; 80 x 30	70,0	130	0,72	**1503737**

ACCESSORIES

Snap-on mounting for DIN rail, suitable for design type CTB 31.35 / CTB 41.35	**1502140**

DIMENSIONAL DRAWINGS

All dimensions in mm

CTB 31.35

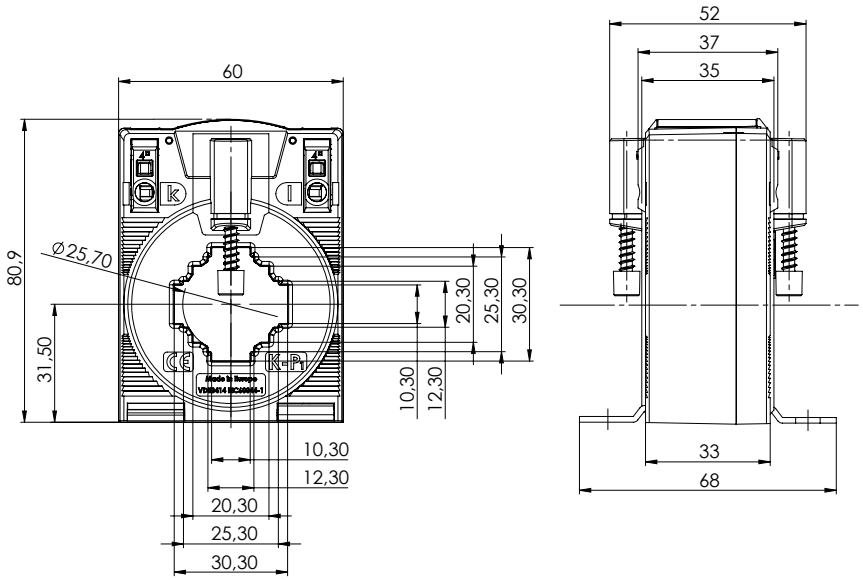

CTB 41.35

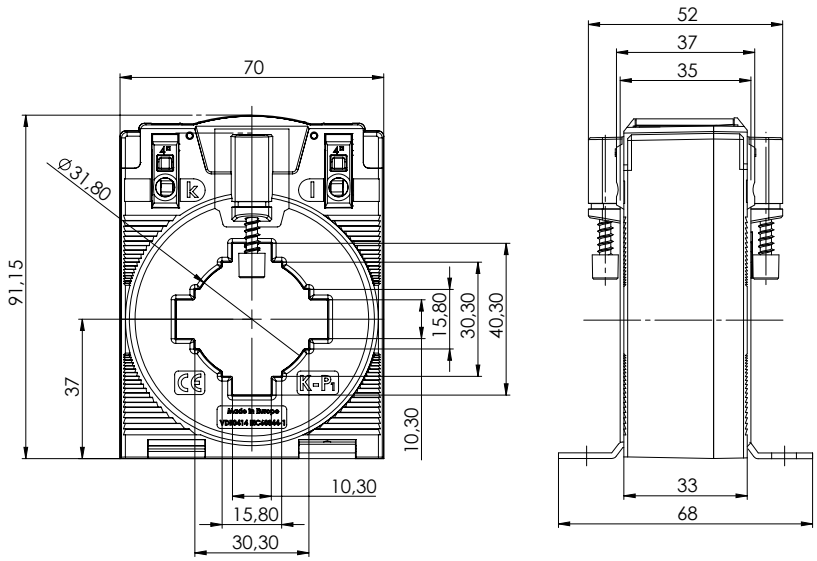

DIMENSIONAL DRAWINGS

All dimensions in mm

CTB 51.35

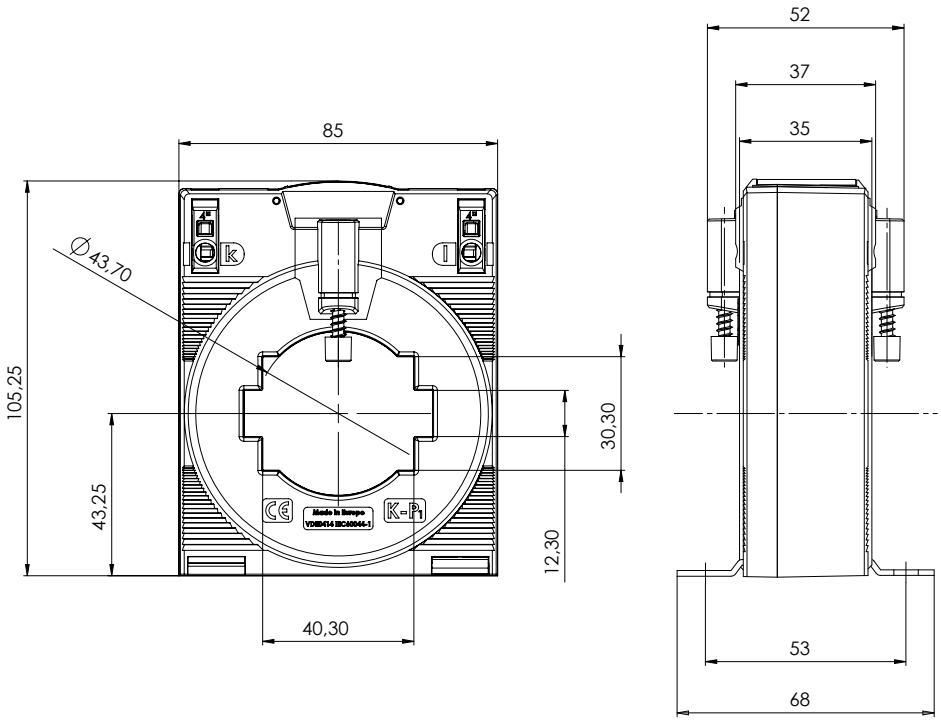

CTB 61.35

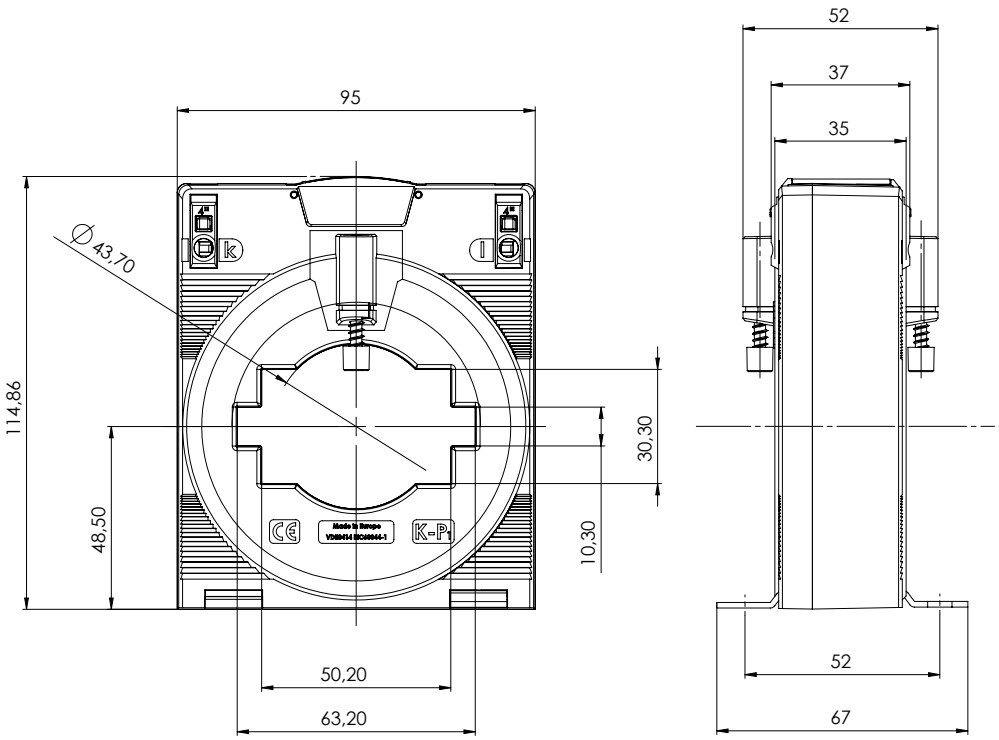

DIMENSIONAL DRAWINGS

All dimensions in mm

CTB 81.35

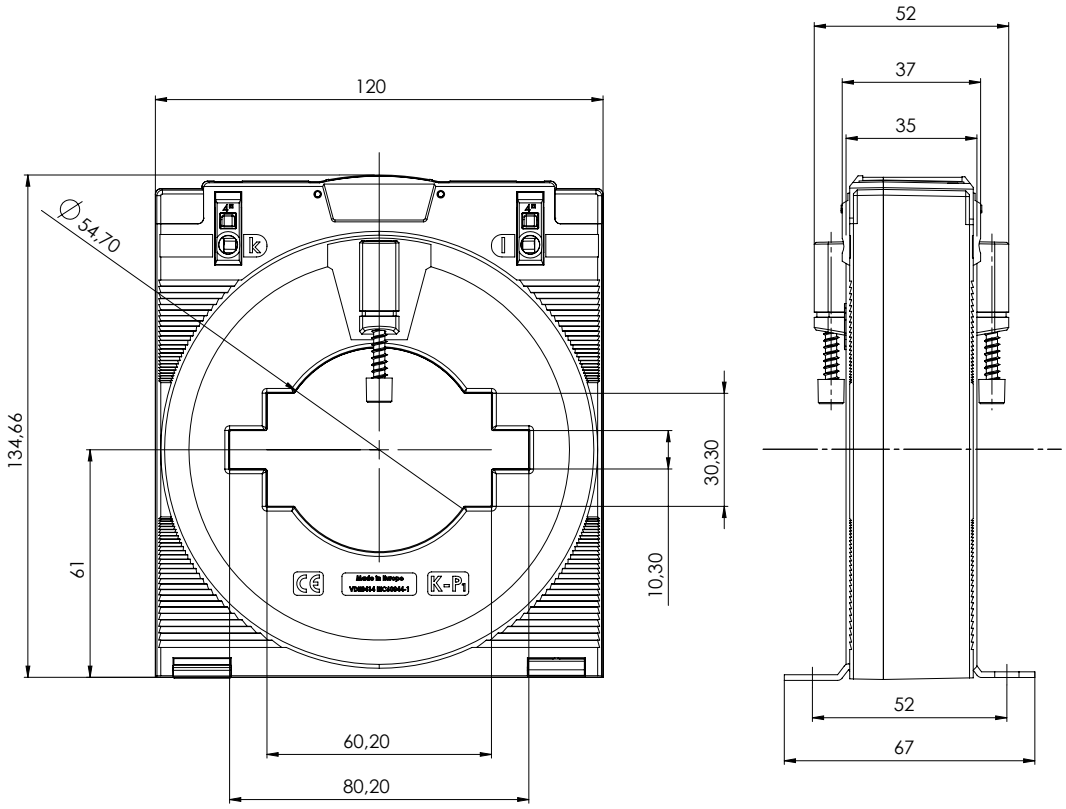

DIMENSIONAL DRAWINGS

All dimensions in mm

CTB 101.35

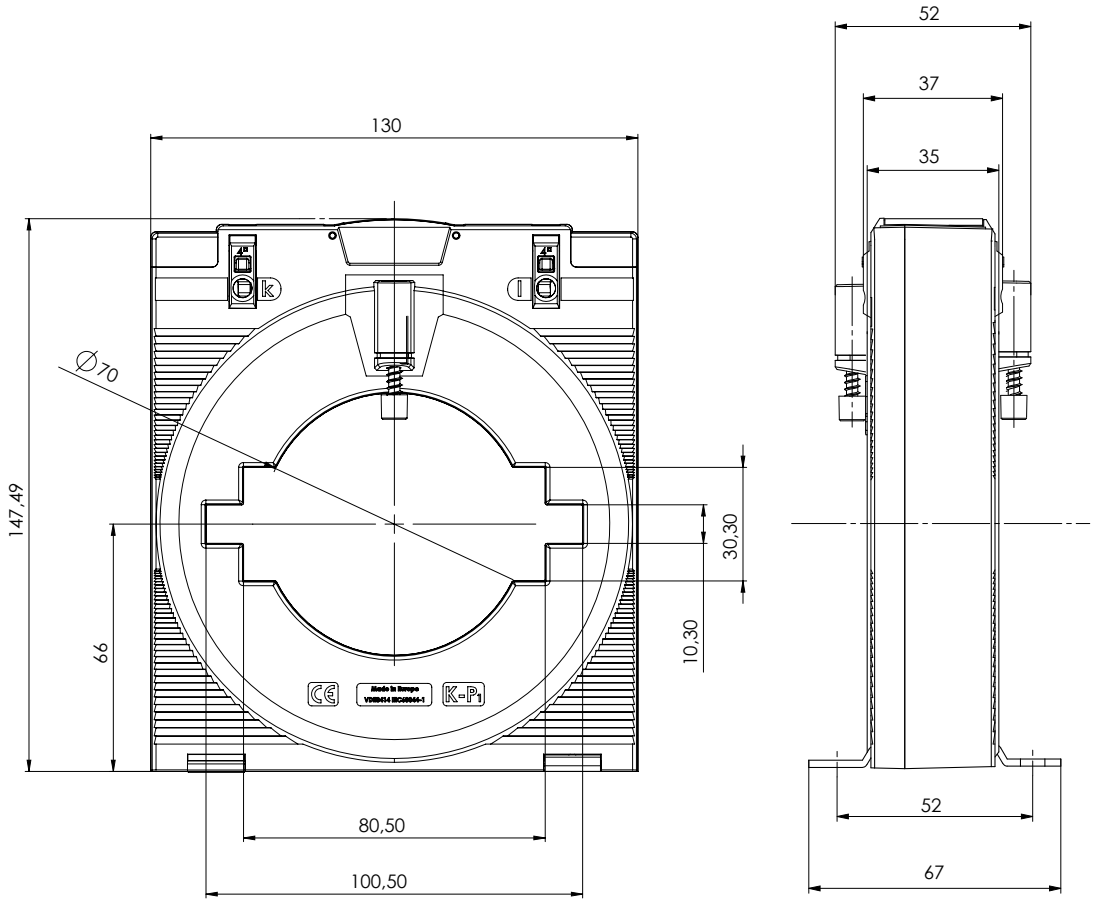

PLUG-IN CURRENT TRANSFORMER, CLASS 0.5 ... / 5 A

With plug-in current transformers, the conductor to be measured is fed through the opening, which is available in various diameters. The break proof plastic housings are flame retardant and self-extinguishing.

When installing plug-in current transformers, the primary conductor is interrupted, meaning they are mainly suitable for new installations.



TECHNICAL DATA

PLUG-IN CURRENT TRANSFORMER, CLASS 0.5 ... / 5 A SECONDARY CURRENT*

TYPE	PRIMARY CURRENT in A	RATIO	POWER in VA	PRIMARY CONDUCTOR	ROUND CONDUCTOR in mm	WIDTH in mm	WEIGHT in kg	ITEM NO.
IPA40.5	60	60/5	2	40 x 10; 30 x 15; 25 x 20	30	70	0.6	**0905349**
IPA40.5	75	75/5	2	40 x 10; 30 x 15; 25 x 20	30	70	0.6	**0905350**
IPA40.5	100	100/5	2.5	40 x 10, 30 x 15; 25 x 20	30	70	0.5	**0905351**
IPA40.5	150	150/5	5	40 x 10, 30 x 15; 25 x 20	30	70	0.6	**0905236**
6A315.3	200	200/5	3.75	30 x 15, 20 x 20	28	60	0.3	**0900360**
6A315.3	250	250/5	5	30 x 15; 20 x 20	28	60	0.3	**0900361**
6A315.3	300	300/5	5	30 x 15; 20 x 20	28	60	0.3	**0900362**
6A315.3	400	400/5	5	30 x 15; 20 x 20	28	60	0.3	**0900363**
6A315.3	500	500/5	5	30 x 15; 20 x 20	28	60	0.3	**0900364**
6A315.3	600	600/5	5	30 x 15; 20 x 20	28	60	0.3	**0900365**
7A412.3	800	800/5	5	40 x 12; 2 x 30 x 10	33	70	0.4	**0900887**
7A412.3	1000	1000/5	5	40 x 12; 2 x 30 x 10	33	70	0.4	**0900888**
8A512.3	1.250	1250/5	5	50 x 12; 2 x 40 x 10	42	85	0.4	**0901339**
9A615.3	1.500	1500/5	5	63 x 15; 2 x 50 x 10	53	95	0.5	**0901820**
9A615.3	1.600	1600/5	5	63 x 15; 2 x 50 x 10	53	95	0.5	**0901821**
9A615.3	2.000	2000/5	5	63 x 15; 2 x 50 x 10	53	95	0.5	**0901822**
9A615.3	2.500	2500/5	5	63 x 15; 2 x 50 x 10	53	95	0.5	**0901823**

ACCESSORIES

Snap-on mounting for DIN rail, suitable for design type 9A615.3, IPA40	0.01	**0909000**
Snap-on mounting for DIN rail, suitable for design type 6A315.3, 7A412.3, 8A512.3 and 9A615.3	0.01	**0909001**
Snap-on mounting for DIN rail, suitable for design type IPA40.5	0.01	**0909002**

** Secondary current transformer ... / 1 A and other types on request.*

DIMENSIONAL DRAWINGS

IPA40.5

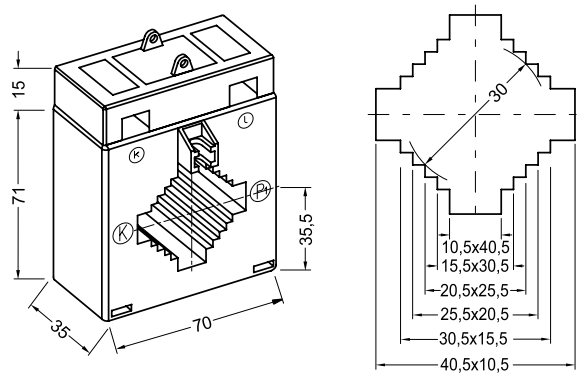

6A315.3

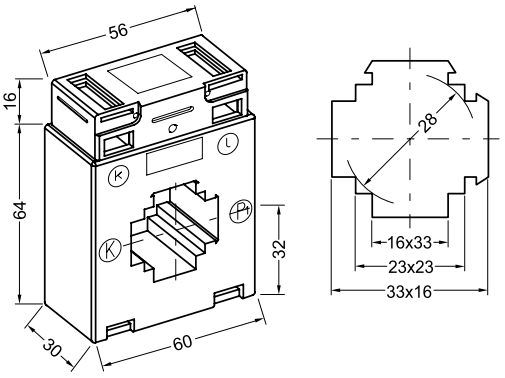

7A412.3

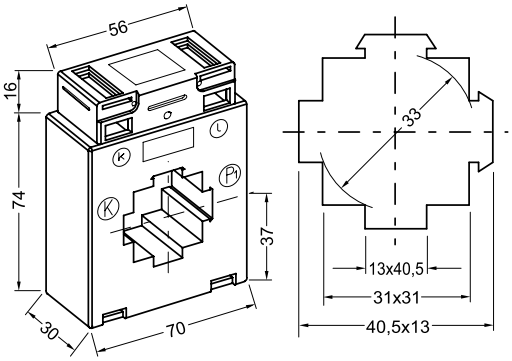

8A512.3

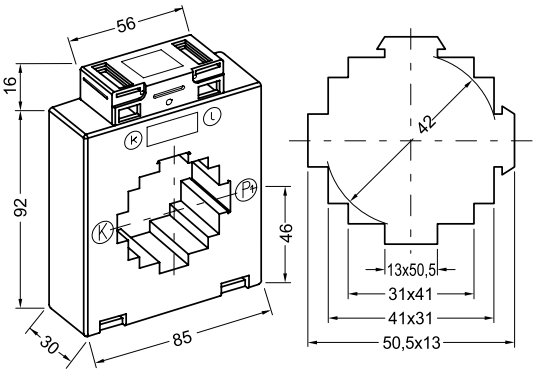

9A615.3

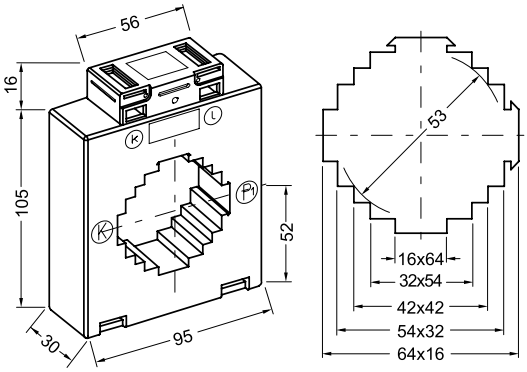

PLUG-IN CURRENT TRANSFORMERS FOR BILLING PURPOSES, CLASS 0.5 ... / 5 A

Current transformers for billing can be used to meet applicable regulations for kWh meters. The transformers are available in various ratios and with different diameters.



TECHNICAL DATA

PLUG-IN CURRENT TRANSFORMERS FOR BILLING PURPOSES, CLASS 0.5 ... / 5 A SECONDARY CURRENT*

TYPE	PRIMARY CURRENT in A	RATIO	POWER in VA	PRIMARY CONDUCTOR	ROUND CONDUCTOR in mm	WIDTH in mm	WEIGHT in kg	ITEM NO.
EIPA30.5	50	50/5	2.5	30.5 x 10.5; 20.5 x 20.5; 10.5 x 30.5	23	70	0.4	**0914813**
EIPA30.5	75	75/5	2.5	30.5 x 10.5; 20.5 x 20.5; 10.5 x 30.5	23	70	0.4	**0914812**
EIPA30.5	100	100/5	2.5	30.5 x 10.5; 20.5 x 20.5; 10.5 x 30.5	23	70	0.3	**0914811**
E6A315.3	150	150/5	2.5	33 x 16; 23 x 23, 16 x 33	28	60	0.3	**0910339**
E6A315.3	200	200/5	2.5	33 x 16; 23 x 23, 16 x 33	28	60	0.3	**0910340**
E6A315.3	250	250/5	5	33 x 16; 23 x 23, 16 x 33	28	60	0.3	**0910367**
E6A315.3	300	300/5	5	33 x 16; 23 x 23, 16 x 33	28	60	0.3	**0910366**
E6A315.3	400	400/5	5	33 x 16; 23 x 23, 16 x 33	28	60	0.3	**1502907**
E6A315.3	500	500/5	5	33 x 16; 23 x 23, 16 x 33	28	60	0.3	**0910364**
E6A315.3	600	600/5	5	33 x 16; 23 x 23, 16 x 33	28	60	0.3	**0911365**
E7A412.3	750	750/5	5	40.5 x 13; 31 x 31, 13 x 40.5	33	70	0.3	**0910391**
E7A412.3	1000	1000/5	5	40.5 x 13; 31 x 31, 13 x 40.5	33	70	0.4	**0910888**
E9A615.3	1.500	1500/5	5	64 x 16; 54 x 32; 42 x 42; 32 x 54; 16 x 64	53	95	0.4	**0910387**
E13A1030.3	2.000	2000/5	5	101 x 31; 84 x 64; 54 x 81	85	129	0.5	**0912888**
E13A1030.3	2.500	2500/5	5	101 x 31; 84 x 64; 54 x 81	85	129	0.5	**0912889**

ACCESSORIES

Declaration of conformity with errata	**0950011**

** Transformers are made to order, no stock items, returns excluded. Current transformers with other primary or secondary currents on request.*

DIMENSIONAL DRAWINGS

EIPA30.5

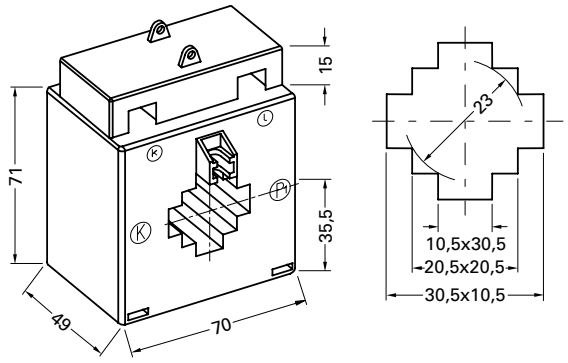

E6A315.3

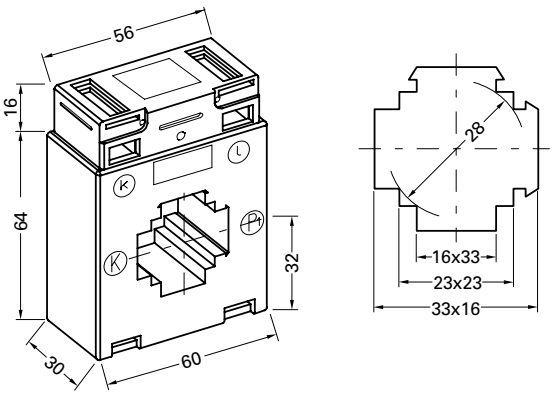

E7A412.3

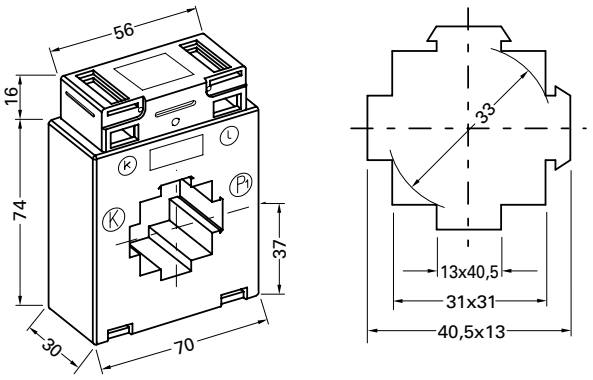

E9A615.3

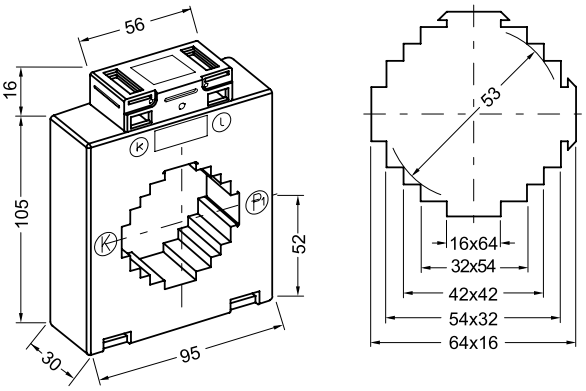

E13A1030.3

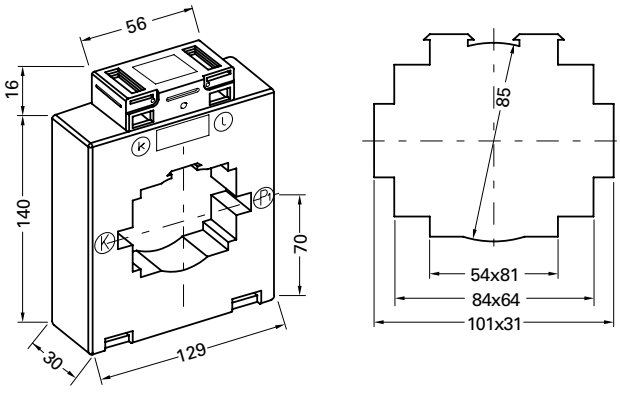

PLUG-IN CURRENT TRANSFORMERS FOR BILLING PURPOSES, CLASS 0.2S ... / 5 A

Current transformers for billing can be used to meet applicable regulations for kWh meters. The transformers are available in various ratios and with different diameters.



TECHNICAL DATA

PLUG-IN CURRENT TRANSFORMERS FOR BILLING PURPOSES, CLASS 0.2S ... / 5 A SECONDARY CURRENT*

TYPE	PRIMARY CURRENT in A	RATIO	POWER in VA	PRIMARY CONDUCTOR	ROUND CONDUCTOR in mm	HEIGHT in mm	WIDTH in mm	WEIGHT in kg	ITEM NO.
ERM60-E3A	150	150/5	1 VA	30 x 10	24.5	30	60	0.4	**0906212**
ERM60-E3A	200	200/5	2 VA	30 x 10	24.5	30	60	0.4	**0906213**
ERM60-E3A	250	250/5	2.5 VA	30 x 10	24.5	30	60	0.4	**0906214**
ERM70-E4A	300	300/5	2.5 VA	40 x 10	30.5	30	70	0.4	**0906215**
ERM70-E4A	400	400/5	5 VA	40 x 10	30.5	30	70	0.4	**0906216**
ERM70-E4A	500	500/5	5 VA	40 x 10	30.5	30	70	0.4	**0906217**
ERM70-E4B	600	600/5	5 VA	40 x 10	30.5	50	70	0.5	**0906218**
ERM70-E4B	750	750/5	5 VA	40 x 10	30.5	50	70	0.5	**0906219**
ERM85-E6A	1000	1000/5	5 VA	60 x 10	30.6	40	85	0.6	**0906220**

ACCESSORIES

Snap-on mounting DIN rail, suitable for design type ERM60/ERM70	**0909012**

** Transformers are made to order, no stock items, returns excluded.*

DIMENSIONAL DRAWINGS

ERM60-E2A

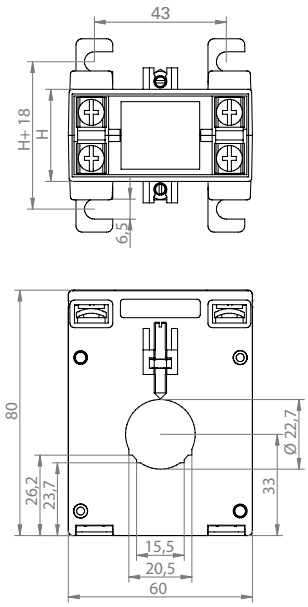

ERM60-E3A

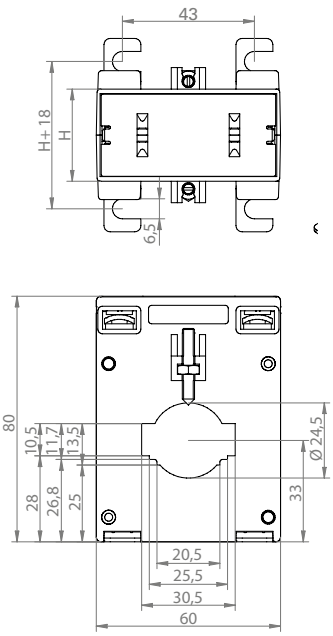

ERM70-E4A

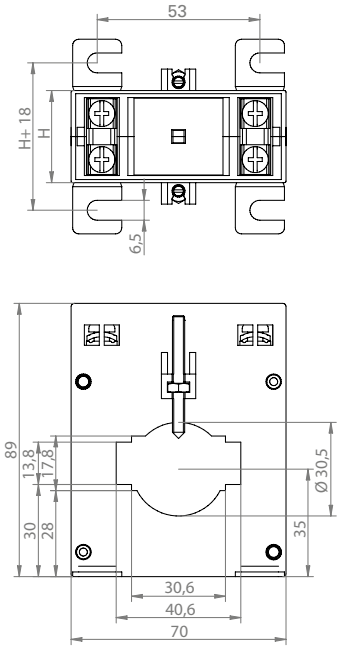

ERM85-E6A

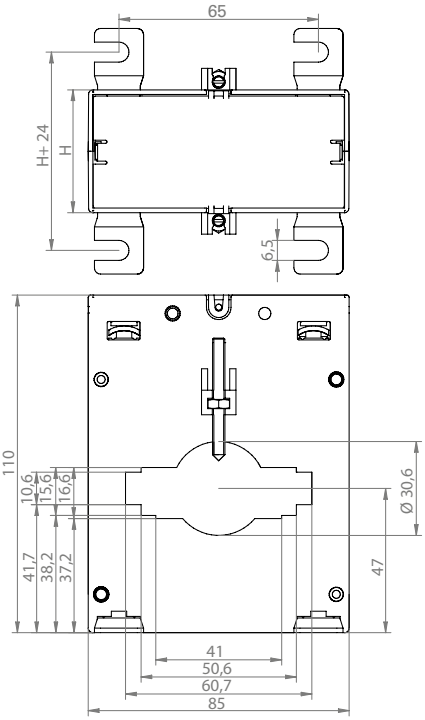

LOW-POWER CURRENT TRANSFORMERS

These compact, low-power current transformers are used to convert currents up to 2500 A to voltages up to 333 mV. They can only be used in combination with the following products UMG 96-PQ-L-LP (item no. 5236006 and 5236007), module 800-CT8-LP (item no. 5231234) and module 800-CT24 (item no. 5231247).



TECHNICAL DATA

LOW-POWER CURRENT TRANSFORMERS

TYPE	PRIMARY CURRENT in A	OUTPUT SIGNAL in mV	CABLE LENGTH in m	CLASS	FEED-THROUGH PRIMARY CONDUCTOR IN MM	DIMENSIONS in mm (W x H x D)	WEIGHT in kg	ITEM NO.
SEPARABLE CURRENT TRANSFORMERS								
CT-SC-010-500-5	5	333	5	2	Ø 9.5	23.5 x 39.0 x 26.5	0.085	**1503333**
CT-SC-006-500-20	20	333	5	0.5	Ø 6.1	18.4 x 29.0 x 20.4	0.03	**1503334**
CT-SC-010-500-50	50	333	5	0.5	Ø 9.5	22.5 x 39.0 x 26.0	0.05	**1503335**
CT-SC-010-500-75	75	333	5	0.5	Ø 9.5	22.5 x 39.0 x 26.0	0.06	**1503336**
CT-SC-012-500-75	75	333	5	0.5	Ø 12.0	37.5 x 46.0 x 25.5	0.07	**1503337**
CT-SC-016-500-100	100	333	5	0.5	Ø 16.0	31.5 x 46.0 x 32.0	0.10	**1503338**
CT-SC-024-500-100	100	333	5	0.5	Ø 23.3	45.0 x 66.5 x 34.4	0.18	**1503339**
CT-SC-024-500-200	200	333	5	0.5	Ø 23.3	45.0 x 66.5 x 34.4	0.18	**1503340**
CT-SC-024-500-250	250	333	5	0.5	Ø 23.3	45.0 x 66.5 x 34.4	0.18	**1503341**
CT-SC-036-500-400	400	333	5	0.5	Ø 35.3	57.5 x 81.5 x 38.4	0.35	**1503342**
CT-SC-036-500-600	600	333	5	0.5	Ø 35.3	57.5 x 81.5 x 38.4	0.35	**1503343**
CT-BSC-021-000-600	600	333	0	0.5	21.0 x 51.0	81.0 x 92.0 x 40.0	0.50	**1503347**
CT-BSC-050-000-1200	1200	333	0	0.5	50.0 x 90.0	110.0 x 149.0 x 32.0	0.70	**1503348**
CT-BSC-080-000-2500	2500	333	0	0.5	80.0 x120.0	140.0 x 178.0 x 32.0	0.95	**1503349**
PLUG-IN CURRENT TRANSFORMERS								
CT-009-500-50	50	333	5	0.5	Ø 9.0	26.8 x 31.4 x 17.0	0.19	**1503344**
CT-012-500-100	100	333	5	0.5	Ø 12.3	37.3 x 41.8 x 14.5	0.20	**1503345**
CT-019-500-250	250	333	5	0.5	Ø 19.3	47.5 x 60.0 x 17.5	0.25	**1503346**

These converters can only be used in combination with the following products:
– UMG 96-PQ-L-LP, item no. 5236006 and 5236007
– Module 800-CT8-LP, item no. 5231234
– Module 800-CT24, item no. 5231247 (connector for module 800-CT24 is required, item no. 1503122, must be purchased separately, note max. cable length of 5 m)

DIMENSIONAL DRAWINGS

All dimensions in mm

CT-SC-006-500-20

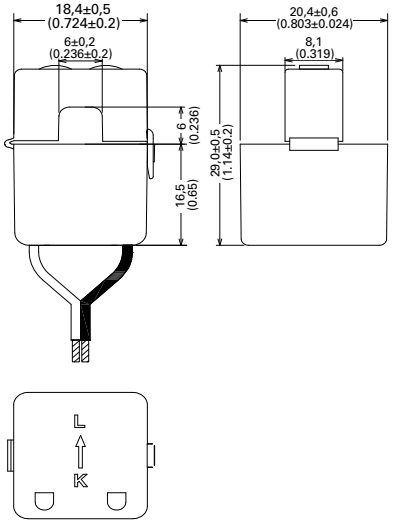

CT-SC-010-xx

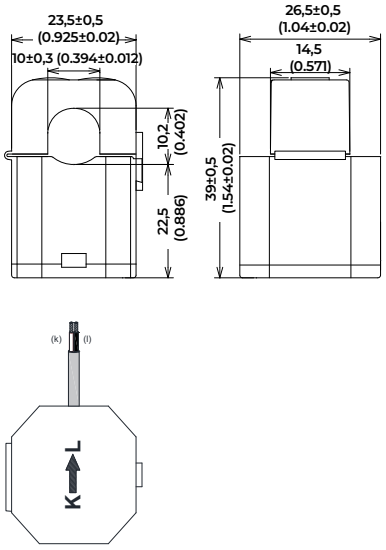

CT-SC-012-xxx

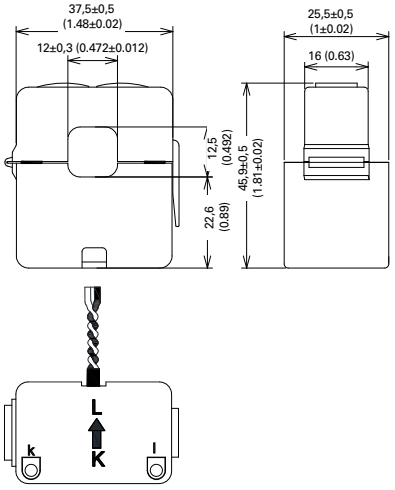

CT-SC-016-500-100

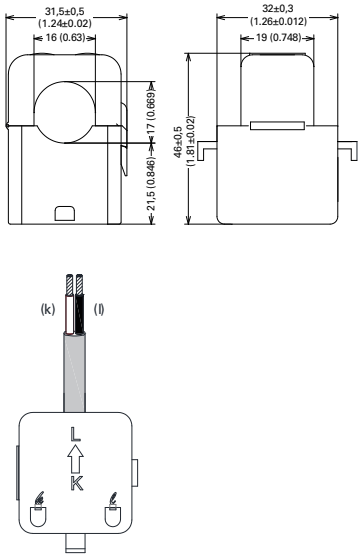

CT-ST-024-500-xxx

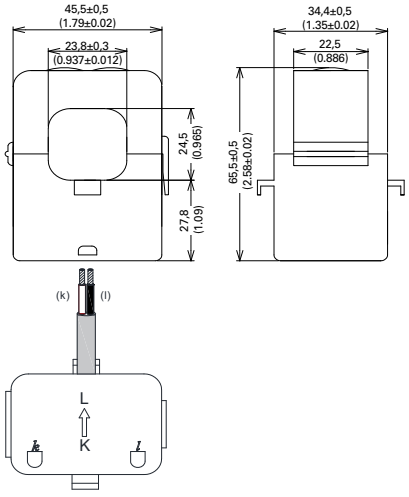

CT-SC-036-500-xxx

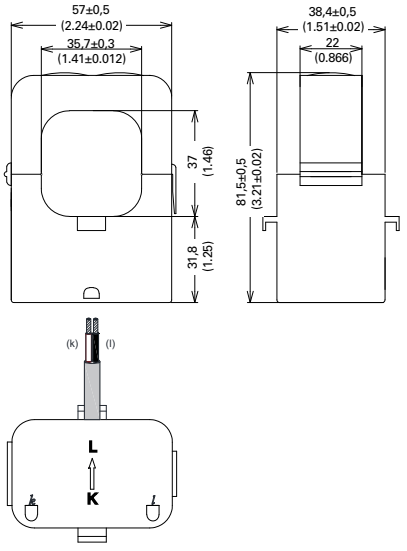

DIMENSIONAL DRAWINGS

All dimensions in mm

CT-009-500-50

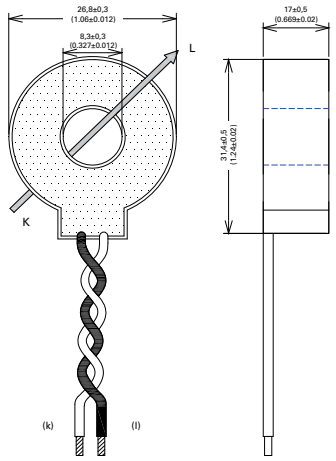

CT-012-500-100

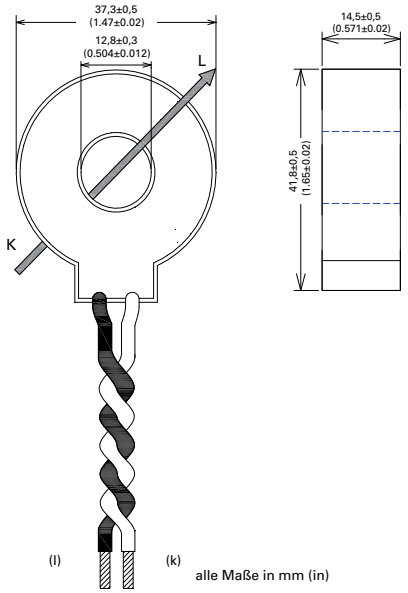

alle Maße in mm (in)

CT-019-500-250

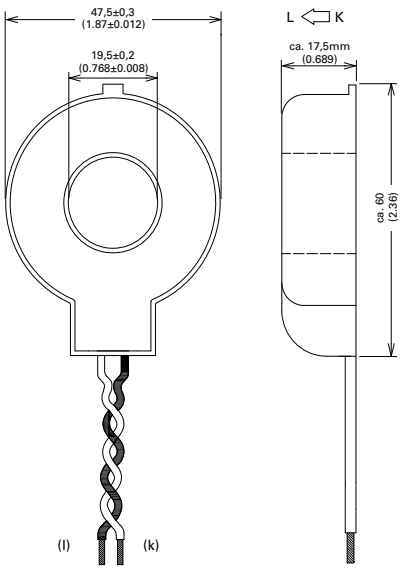

alle Maße in mm (in)

CT-BSC-021-000-600

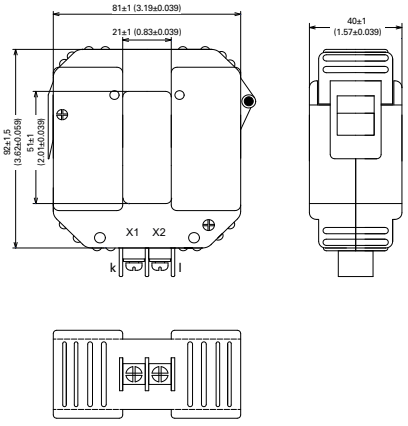

CT-BSC-050-000-1200

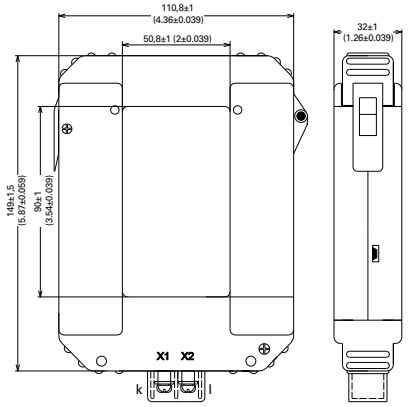

CT-BSC-080-000-2400

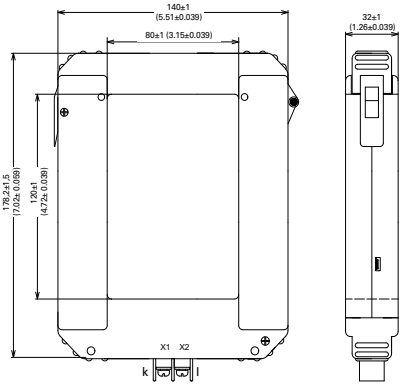

TECHNICAL DATA

THESE CONVERTERS CAN ONLY BE USED IN COMBINATION WITH THE UMG 800, ITEM NO. 5238001, AND UMG 801, ITEM NO. 5231003, AS WELL AS THE 800-CT24 MODULE, ITEM NO. 5231247.

TYPE	PRIMARY CURRENT in A	SECONDARY SIGNAL in mV	CABLE LENGTH in m	ROUND CONDUCTOR in mm	DIMENSIONS in mm (W x H x D)	WEIGHT in kg	ITEM NO.
CT24-SC-010-200-50	50	333	2	10	23,5 x 39,0 x 26,5	0,55	**1503124**
CT24-SC-010-200-75	75	333	2	10	23,5 x 39,0 x 26,5	0,60	**1503125**
CT24-SC-012-200-100	100	333	2	12,5	37,5 x 49,9 x 25,5	0,80	**1503126**
CT24-SC-010-025-50	50	333	0,25	10	23,5 x 39,0 x 26,5	0,40	**1503127**
CT24-SC-010-025-75	75	333	0,25	10	23,5 x 39,0 x 26,5	0,43	**1503128**
CT24-SC-012-025-100	100	333	0,25	12,5	37,5 x 49,9 x 25,5	0,65	**1503129**

ACCESSORIES

Extension cable for current transformer of the Module 800-CT24, cable length 3 m	**1503123**

These current transformers can only be used in combination with the UMG 800, item no. 5238001, and UMG 801, item no. 5231003, as well as the 800-CT24 module, item no. 5231247.

DIMENSIONAL DRAWINGS

All dimensions in mm

CT24-SC-010-200-50 / CT24-SC-010-025-50

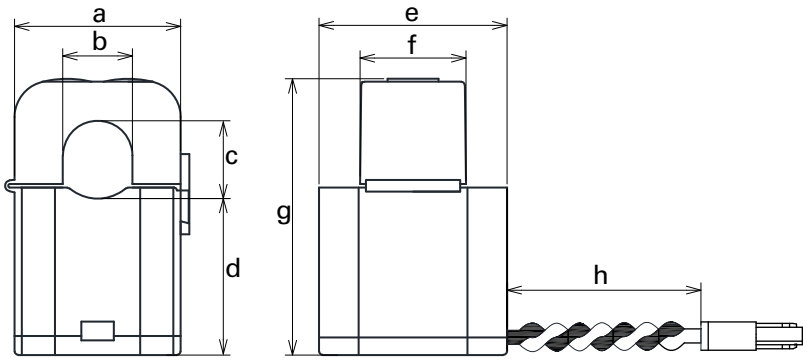

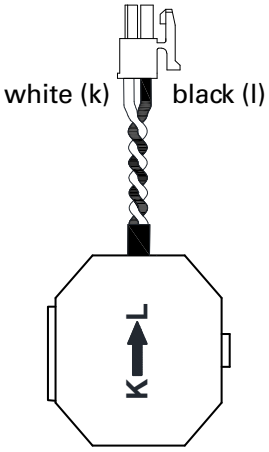

Letter		Length in mm	Length in inch
a		23,5 ±0,5	0.925 ±0.019
b		10 ±0,3	0.394 ±0.012
c		10,2	0.402
d		22,5	0.886
e		26,5 ±0,5	1.043 ±0.019
f		14,5	0.571
g		39 ±0,5	1.535 ±0.019
h	Item no. 1503124	2000 ±50	78.740 ±1.969
	Item no. 1503127	250 ±20	9.843 ±0.787

DIMENSIONAL DRAWINGS

All dimensions in mm

CT24-SC-010-200-75 / CT24-SC-010-025-75

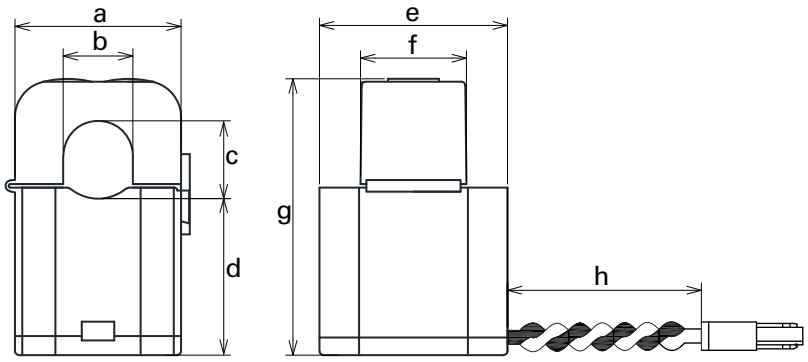

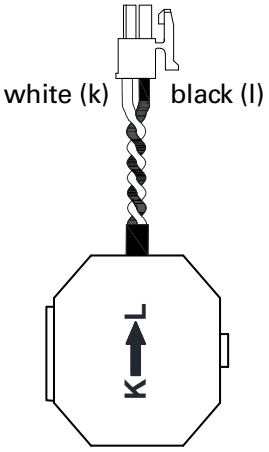

Letter		Length in mm	Length in inch
a		23,5 ±0,5	0.925 ±0.019
b		10 ±0,3	0.394 ±0.012
c		10,2	0.402
d		22,5	0.886
e		26,5 ±0,5	1.043 ±0.019
f		14,5	0.571
g		39 ±0,5	1.535 ±0.019
h	Item no. 1503125	2000 ±50	78.740 ±1.969
	Item no. 1503128	250 ±20	9.843 ±0.787

DIMENSIONAL DRAWINGS

All dimensions in mm

CT24-SC-012-200-100 / CT24-SC-012-025-100

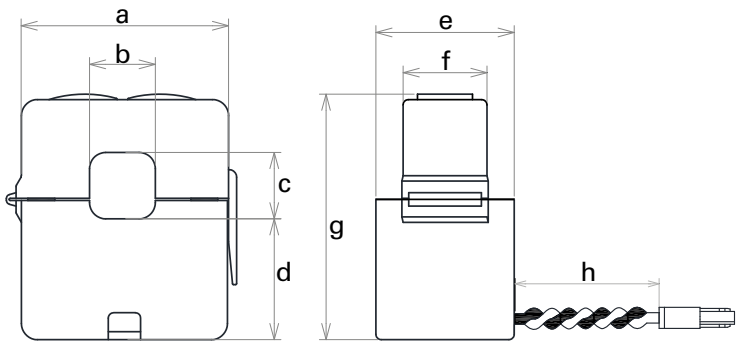

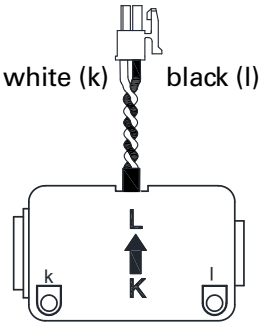

Letter		Length in mm	Length in inch
a		37,5 ±0,5	1.476 ±0.019
b		12 ±0,3	0.472 ±0.012
c		12,5	0.492
d		22,6	0.890
e		25,5 ±0,5	1.004 ±0.019
f		16,0	0.630
g		49,9 ±0,5	1.965 ±0.019
h	Item no. 1503126	2000 ±50	78.740 ±1.969
	Item no. 1503129	250 ±20	9.843 ±0.787

TECHNICAL DATA

LOW-POWER CURRENT TRANSFORMERS, CLASS 0,5

TYPE	PRIMARY CURRENT in A	SECONDARY SIGNAL in mV	PRIMARY CONDUCTOR in mm	ROUND CONDUCTOR in mm	CONSTRUCTION WIDTH in mm	WEIGHT in kg	ITEM NO.
CTB 31.35	150	333	30 x 10; 25 x 12	25,7	60	0,29	**1503738**
CTB 31.35	200	333	30 x 10; 25 x 12	25,7	60	0,25	**1503739**
CTB 31.35	250	333	30 x 10; 25 x 12	25,7	60	0,32	**1503740**
CTB 31.35	300	333	30 x 10; 25 x 12	25,7	60	0,28	**1503741**
CTB 31.35	400	333	30 x 10; 25 x 12	25,7	60	0,27	**1503742**
CTB 31.35	500	333	30 x 10; 25 x 12	25,7	60	0,30	**1503743**
CTB 31.35	600	333	30 x 10; 25 x 12	25,7	60	0,30	**1503744**
CTB 41.35	500	333	40 x 10; 30 x 15	31,8	70	0,31	**1503745**
CTB 41.35	600	333	40 x 10; 30 x 15	31,8	70	0,31	**1503746**
CTB 41.35	800	333	40 x 10; 30 x 15	31,8	70	0,32	**1503747**
CTB 41.35	1000	333	40 x 10; 30 x 15	31,8	70	0,34	**1503748**
CTB 51.35	1000	333	50 x 12; 40 x 30	43,7	85	0,35	**1503749**
CTB 51.35	1200	333	50 x 12; 40 x 30	43,7	85	0,36	**1503750**
CTB 61.35	1250	333	63 x 10; 50 x 30	43,7	95	0,42	**1503751**
CTB 61.35	1500	333	63 x 10; 50 x 30	43,7	95	0,45	**1503752**
CTB 81.35	1500	333	80 x 10; 60 x 30	54,7	120	0,48	**1503753**
CTB 81.35	1600	333	80 x 10; 60 x 30	54,7	120	0,50	**1503754**
CTB 81.35	2000	333	80 x 10; 60 x 30	54,7	120	0,57	**1503755**
CTB 101.35	2500	333	100 x 10; 80 x 30	70,0	130	0,66	**1503756**

ZUBEHÖR

Schnappbefestigung für DIN-Hutschiene, geeignet für Bauform CTB 31.35 / CTB 41.35	**1502140**

DIMENSIONAL DRAWINGS

All dimensions in mm

CTB 31.35

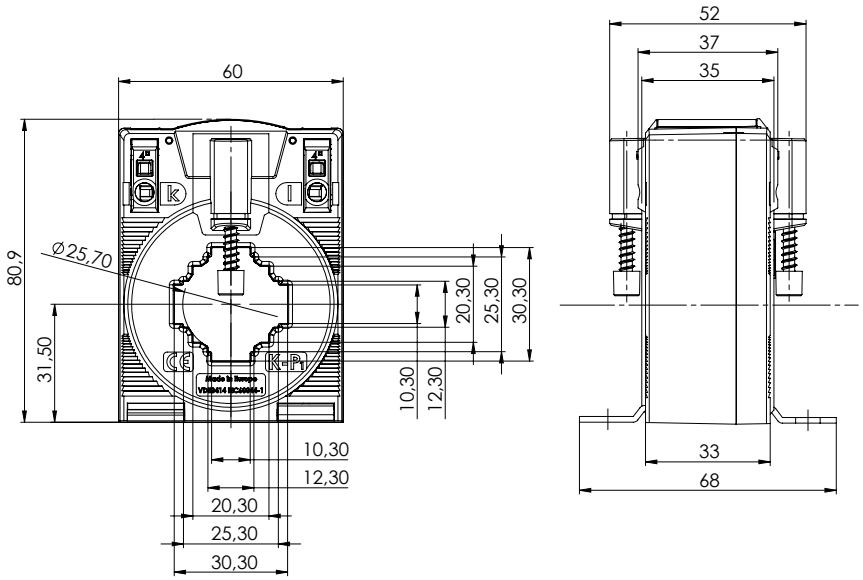

CTB 41.35

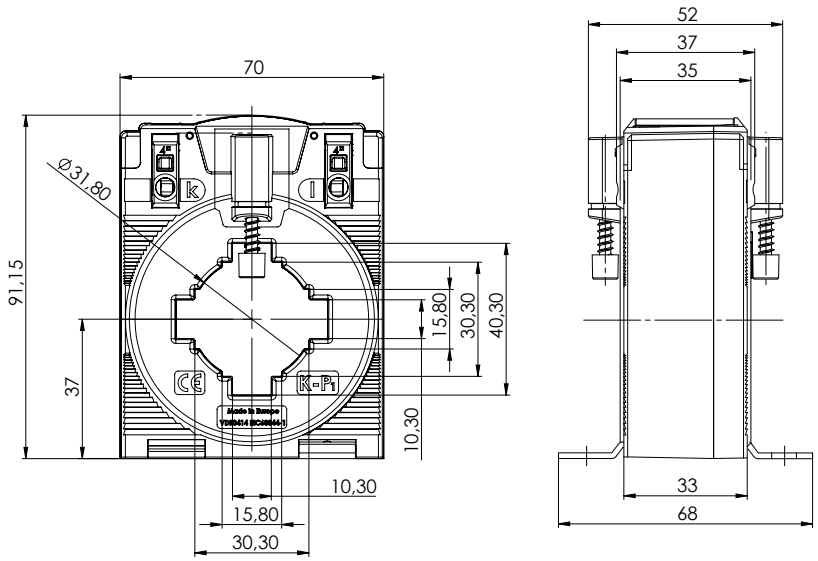

DIMENSIONAL DRAWINGS

All dimensions in mm

CTB 51.35

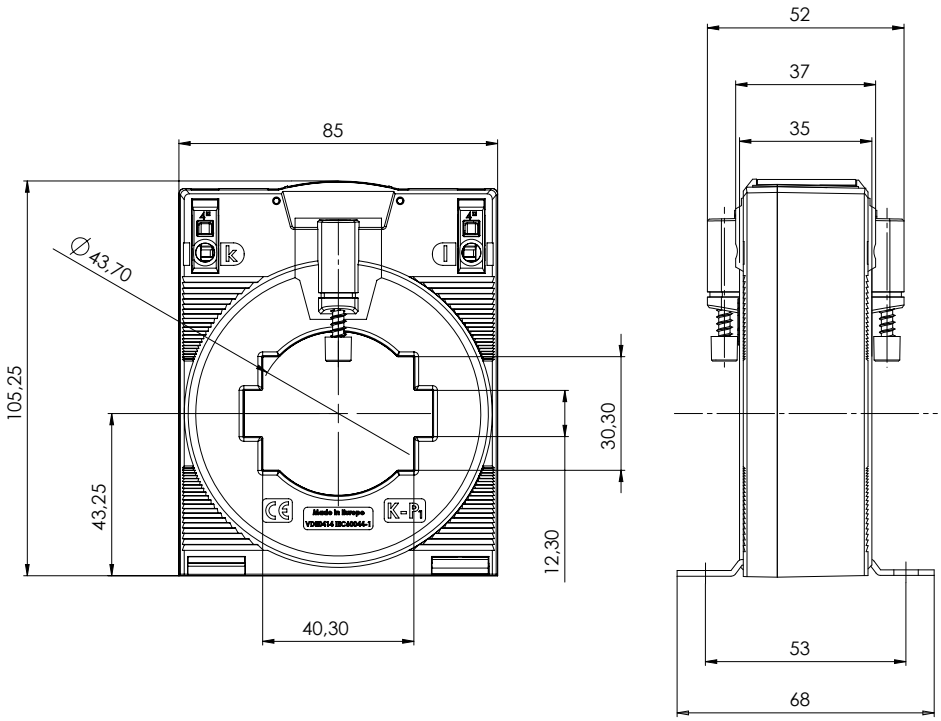

CTB 61.35

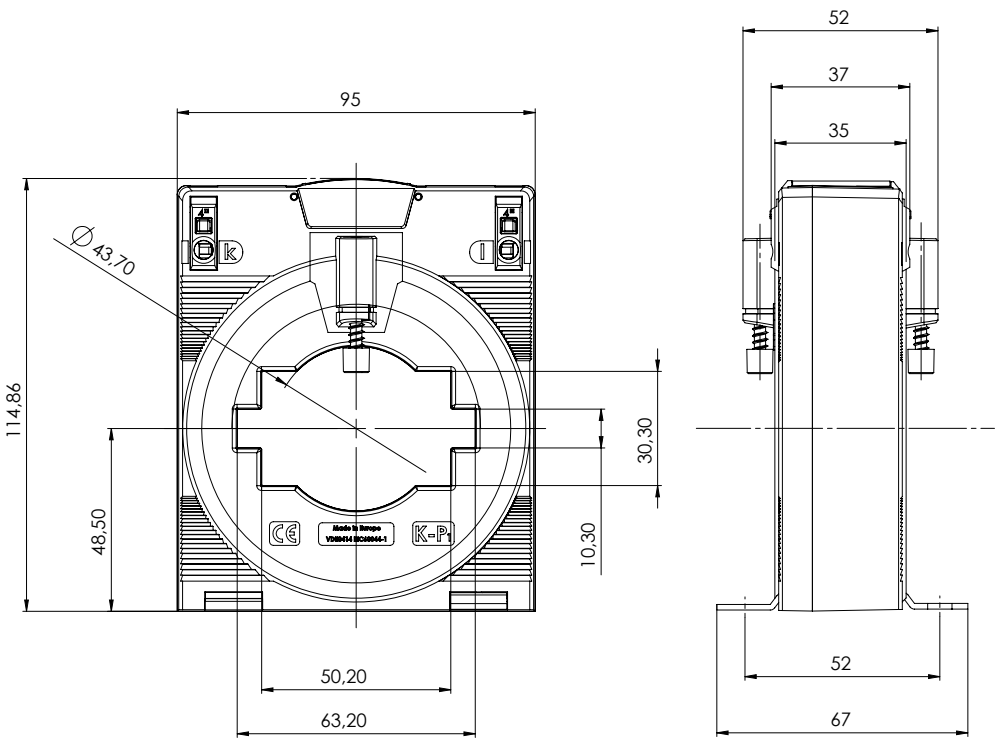

DIMENSIONAL DRAWINGS

All dimensions in mm

CTB 81.35

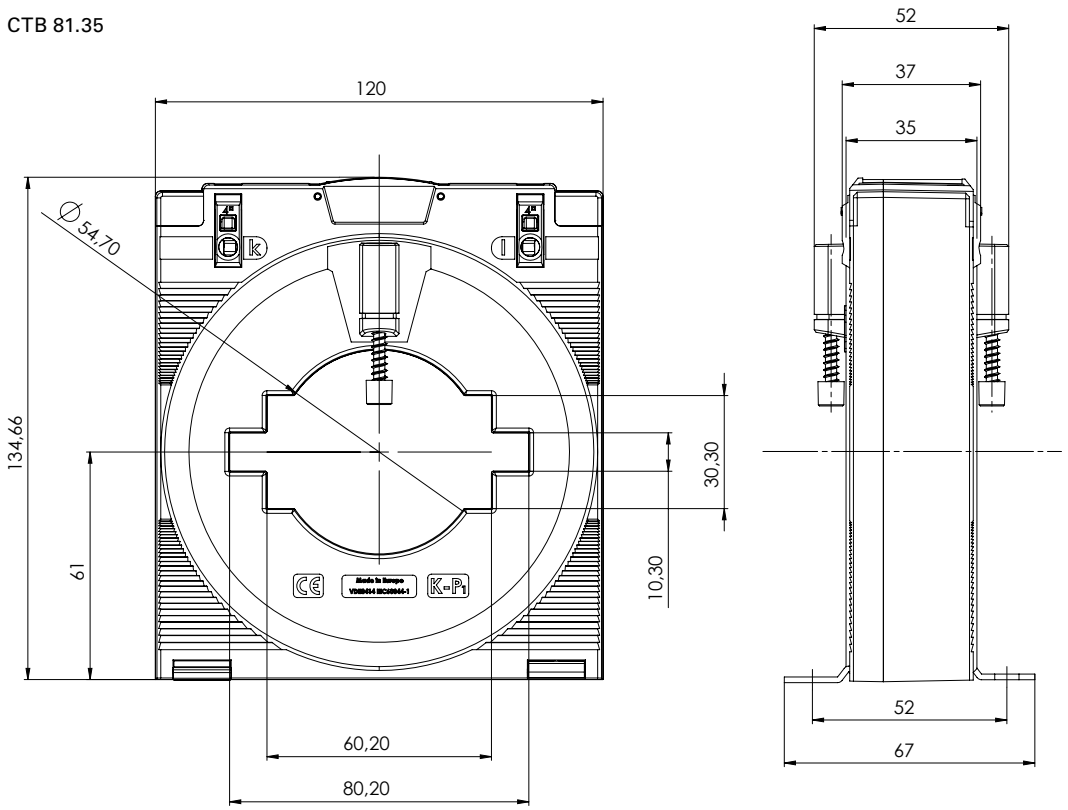

CTB 101.35

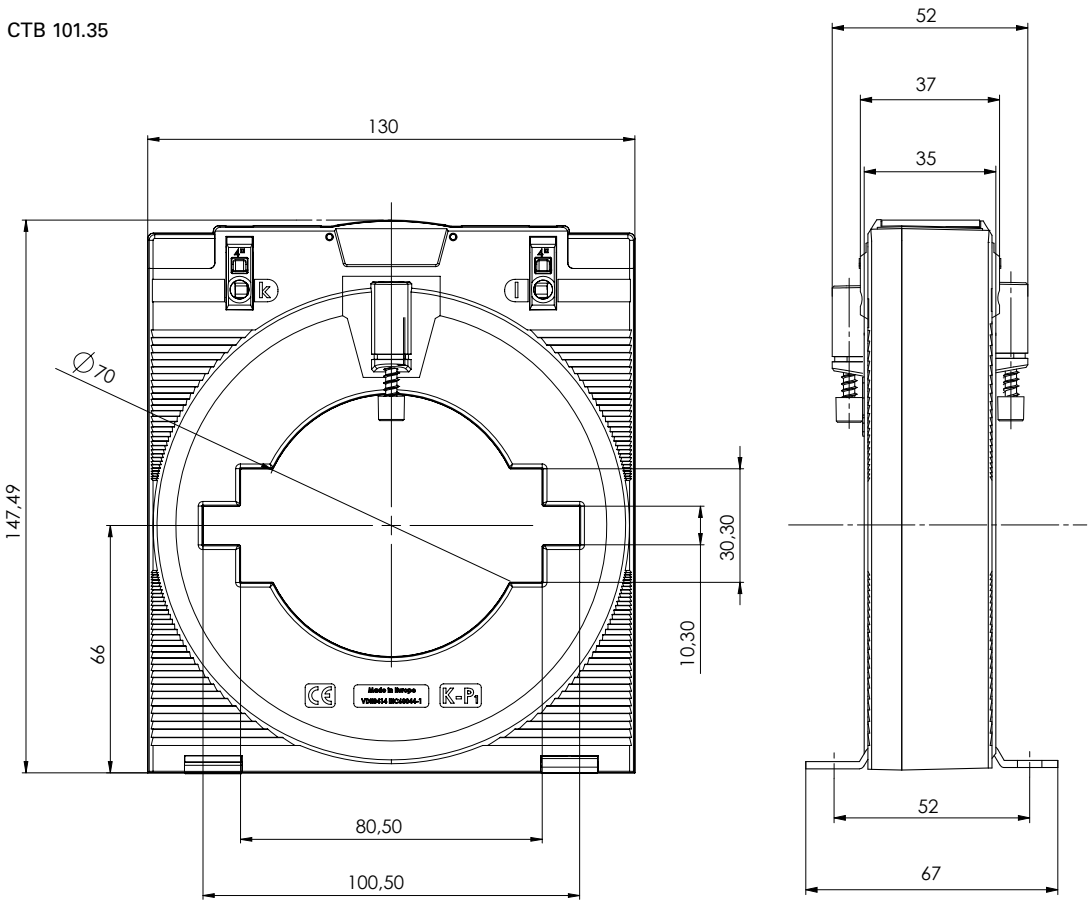

SUMMATION CURRENT TRANSFORMERS FOR PLUG-IN & SPLIT TRANSFORMERS, CLASS 1 & CLASS 0.5

With summation current transformers, the total consumption can be recorded by only one measurement device, even if the measurement is made via two or more current transformers. The summation current transformer adds up the secondary signals of the individual current transformers and makes them available as a normalized measurement signal.



TECHNICAL DATA

SUMMATION CURRENT TRANSFORMERS FOR PLUG-IN & SPLIT TRANSFORMERS, CLASS 1

TYPE	PRIMARY CURRENT in A	SECONDARY CURRENT in A	RATIO	POWER in VA	DIMENSIONS in mm (W x H x D)	WEIGHT in kg	ITEM NO.
IPS20	5+5	5	1/1	15	45 x 115 x 73	0.4	**1502510**
IPS30	5+5+5	5	1/1/1	15	45 x 115 x 73	0.4	**1502515**
IPS40	5+5+5+5	5	1/1/1/1	15	45 x 115 x 73	0.5	**1502520**
IPS20	1+1	1	1/1	15	45 x 115 x 73	0.5	**0905306**
IPS30	1+1+1	1	1/1/1	15	45 x 115 x 73	0.5	**0905316**
IPS40	1+1+1+1	1	1/1/1/1	15	45 x 115 x 73	0.5	**0905326**
IPS21	5+5	5	Customer-specific	15	45 x 115 x 73	0.4	**1502526**
IPS31	5+5+5	5	Customer-specific	15	45 x 115 x 73	0.4	**1502521**
IPS41	5+5+5+5	5	Customer-specific	10	45 x 115 x 73	0.5	**1502525**

SUMMATION CURRENT TRANSFORMERS FOR PLUG-IN & SPLIT TRANSFORMERS, CLASS 0.5

TYPE	PRIMARY CURRENT in A	SECONDARY CURRENT in A	RATIO	POWER in VA	DIMENSIONS in mm (W x H x D)	WEIGHT in kg	ITEM NO.
IPS20	5+5	5	1:1	15	45 x 115 x 73	0.5	**1502511**
IPS30	5+5+5	5	1:1:1	15	45 x 115 x 73	0.5	**1502516**
IPS40	5+5+5+5	5	1:1:1:1	15	45 x 115 x 73	0.5	**1502519**

Not to be used in conjunction with split core current transformers.

DIMENSIONAL DRAWINGS

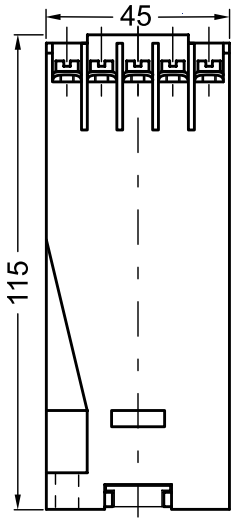

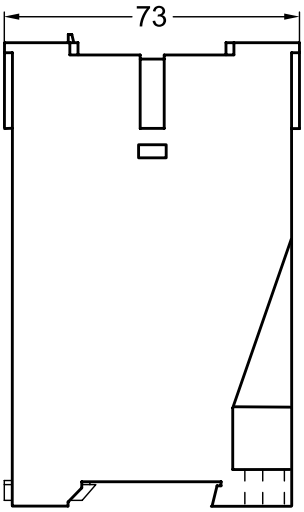

SUMMATION CURRENT TRANSFORMERS FOR SPLIT CORE TRANSFORMERS, CLASS 1

With summation current transformers, the total consumption can be recorded by only one measurement device, even if the measurement is made via two or more current transformers. The summation current transformer adds up the secondary signals of the individual current transformers and makes them available as a normalized measurement signal.



TECHNICAL DATA

SUMMATION CURRENT TRANSFORMERS FOR SPLIT CORE TRANSFORMERS, CLASS 1

TYPE	PRIMARY CURRENT in A	SECONDARY CURRENT in A	RATIO	POWER in VA	DIMENSIONS in mm (W x H x D)	WEIGHT in kg	ITEM NO.
STS20	1+1	1	1:1	0.2	30 x 80 x 60	0.2	**1502560**
STS30	1+1+1	1	1:1:1	0.2	30 x 80 x 60	0.2	**1502561**
STS40	1+1+1+1	1	1:1:1:1	0.2	55 x 80 x 60	0.4	**1502562**
STS50	1+1+1+1+1	1	1:1:1:1:1	0.2	55 x 80 x 60	0.4	**1502563**
STS60	1+1+1+1+1+1	1	1:1:1:1:1:1	0.2	55 x 80 x 60	0.4	**1502564**
STS21	1+1	1	Customer-specific	0.2	30 x 80 x 60	0.2	**1502570**
STS31	1+1+1	1	Customer-specific	0.2	30 x 80 x 60	0.2	**1502571**
STS41	1+1+1+1	1	Customer-specific	0.2	55 x 80 x 60	0.4	**1502572**
STS51	1+1+1+1+1	1	Customer-specific	0.2	55 x 80 x 60	0.4	**1502573**
STS61	1+1+1+1+1+1	1	Customer-specific	0.2	55 x 80 x 60	0.4	**1502574**

For unequal main transformers, the ratio of the largest to the smallest primary current should not be greater than 10/1.

DIMENSIONAL DRAWINGS

STS20 / STS30 / STS21 / STS31

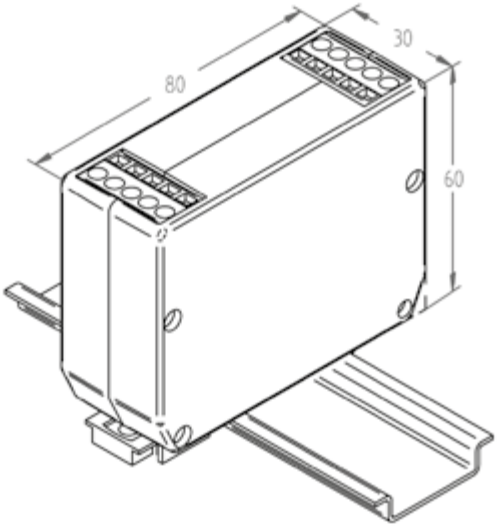

STS40 / STS50 / STS60 / STS41 / STS51 / STS61

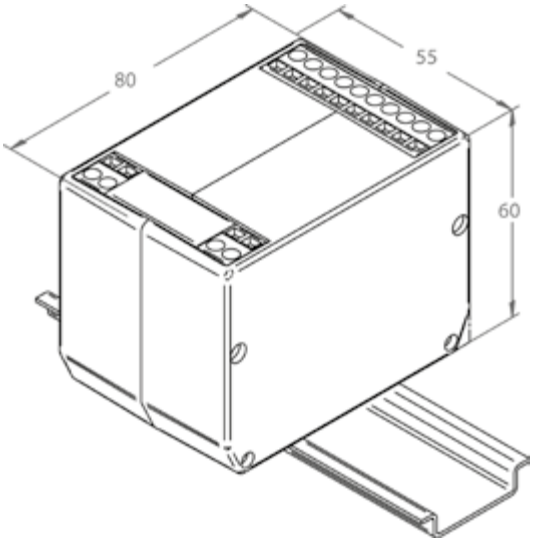

SPLIT CORE CURRENT TRANSFORMERS, CLASS 0.5, 1 AND 3

Split core current transformers are particularly suitable for retrofitting, since their installation does not require the primary circuit to be interrupted. They are quick and easy to install and are available in the types KUW and KBU.



TECHNICAL DATA

SPLIT CORE CURRENT TRANSFORMERS – KUW1 SERIES FOR INSULATED CABLES UP TO MAX. 18 mm IN DIAMETER

TYPE	PRIMARY CURRENT in A	SECONDARY CURRENT in A	POWER in VA	CLASS	CABLE LENGTH in m	Ø OF PRIMARY CONDUCTOR in mm	WEIGHT in kg	ITEM NO.
KUW1/30-60	60	1	0.2	3	3	18	0.3	**1503510**
KUW1/30-75	75	1	0.2	3	3	18	0.3	**1503511**
KUW1/30-100	100	1	0.2	3	3	18	0.3	**1503512**
KUW1/30-125	125	1	0.2	3	3	18	0.3	**1503513**
KUW1/30-150	150	1	0.2	3	3	18	0.3	**1503514**
KUW1/30-200	200	1	0.2	1	3	18	0.3	**1503515**
KUW1/30-250	250	1	0.2	1	3	18	0.3	**1503317**
KUW1/40-100	100	1	0.2	1	3	18	0.4	**1503320**
KUW1/40-125	125	1	0.2	1	3	18	0.4	**1503321**
KUW1/40-150	150	1	0.2	1	3	18	0.4	**1503322**
KUW1/40-200	200	1	0.2	0.5	3	18	0.4	**1503325**
KUW1/40-250	250	1	0.2	0.5	3	18	0.4	**1503326**
KUW1/40-150	150	5	1	1	0.5	18	0.4	**1503329**
KUW1/40-200	200	5	1	1	0.5	18	0.4	**1503330**
KUW1/40-250	250	5	1	0.5	0.5	18	0.4	**1503331**

SPLIT CORE CURRENT TRANSFORMERS – KUW2 SERIES FOR INSULATED CABLES OF MAX. 28 mm IN DIAMETER

TYPE	PRIMARY CURRENT in A	SECONDARY CURRENT in A	POWER in VA	CLASS	CABLE LENGTH in m	Ø OF PRIMARY CONDUCTOR in mm	WEIGHT in kg	ITEM NO.
KUW2/40-200	200	1	0.2	1	3	28	0.3	**1503351**
KUW2/40-250	250	1	0.2	1	3	28	0.3	**1503352**
KUW2/40-300	300	1	0.2	1	3	28	0.3	**1503354**
KUW2/40-400	400	1	0.2	1	3	28	0.4	**1503356**
KUW2/40-500	500	1	0.2	0.5	3	28	0.4	**1503358**
KUW2/40-250	250	5	1	1	0.5	28	0.3	**1503353**
KUW2/40-300	300	5	1	1	0.5	28	0.3	**1503355**
KUW2/40-400	400	5	1	1	0.5	28	0.3	**1503357**
KUW2/40-500	500	5	1	1	0.5	28	0.3	**1503359**

SPLIT CORE CURRENT TRANSFORMERS – KUW4/60 SERIES FOR INSULATED CABLES UP TO MAX. 42 mm IN DIAMETER

TYPE	PRIMARY CURRENT in A	SECONDARY CURRENT in A	POWER in VA	CLASS	CABLE LENGTH in m	Ø OF PRIMARY CONDUCTOR in mm	WEIGHT in kg	ITEM NO.
KUW4/60-250	250	1	0.5	1	5	42	0.6	**1503565**
KUW4/60-300	300	1	0.5	1	5	42	0.6	**1503566**
KUW4/60-400	400	1	0.5	0.5	5	42	0.6	**1503568**
KUW4/60-500	500	1	0.5	0.5	5	42	0.6	**1503570**
KUW4/60-600	600	1	0.5	0.5	5	42	0.6	**1503572**
KUW4/60-750	750	1	0.5	0.5	5	42	0.6	**1503574**
KUW4/60-800	800	1	0.5	0.5	5	42	0.6	**1503576**
KUW4/60-1000	1000	1	0.5	0.5	5	42	0.6	**1503578**
KUW4/60-300	300	5	0.5	1	3	42	0.6	**1503367**
KUW4/60-400	400	5	0.5	1	3	42	0.6	**1503369**
KUW4/60-500	500	5	0.5	1	3	42	0.6	**1503371**
KUW4/60-600	600	5	0.5	0.5	3	42	0.6	**1503373**
KUW4/60-750	750	5	0.5	0.5	3	42	0.6	**1503375**
KUW4/60-800	800	5	0.5	0.5	3	42	0.6	**1503377**
KUW4/60-1000	1000	5	0.5	0.5	3	42	0.6	**1503379**

SPLIT CORE CURRENT TRANSFORMERS – KUW4.2/60 SERIES FOR INSULATED CABLES UP TO MAX. 2 X 42 MM IN DIAMETER

TYPE	PRIMARY CURRENT in A	SECONDARY CURRENT in A	POWER in VA	CLASS	CABLE LENGTH in m	Ø OF PRIMARY CONDUCTOR in mm	WEIGHT in kg	ITEM NO.
KUW4.2/60-250	250	1	0.5	1	5	42 x 84	0.7	**1503580**
KUW4.2/60-300	300	1	0.5	1	5	42 x 84	0.8	**1503581**
KUW4.2/60-400	400	1	0.5	0.5	5	42 x 84	0.7	**1503583**
KUW4.2/60-500	500	1	0.5	0.5	5	42 x 84	0.8	**1503585**
KUW4.2/60-600	600	1	0.5	0.5	5	42 x 84	0.7	**1503587**
KUW4.2/60-750	750	1	0.5	0.5	5	42 x 84	0.8	**1503589**
KUW4.2/60-800	800	1	0.5	0.5	5	42 x 84	0.8	**1503591**
KUW4.2/60-1000	1000	1	0.5	0.5	5	42 x 84	0.8	**1503593**
KUW4.2/60-300	300	5	0.5	1	3	42 x 84	0.7	**1503382**
KUW4.2/60-400	400	5	0.5	1	3	42 x 84	0.8	**1503384**
KUW4.2/60-500	500	5	0.5	1	3	42 x 84	0.6	**1503386**
KUW4.2/60-600	600	5	0.5	0.5	3	42 x 84	0.7	**1503388**
KUW4.2/60-750	750	5	0.5	0.5	3	42 x 84	0.8	**1503390**
KUW4.2/60-800	850	5	0.5	0.5	3	42 x 84	0.8	**1503392**
KUW4.2/60-1000	1000	5	0.5	0.5	3	42 x 84	0.8	**1503394**

DIMENSIONAL DRAWINGS

KUW1/30

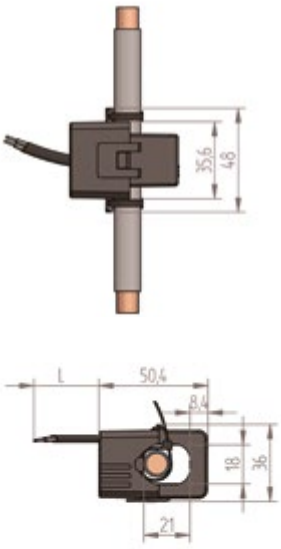

KUW1/40

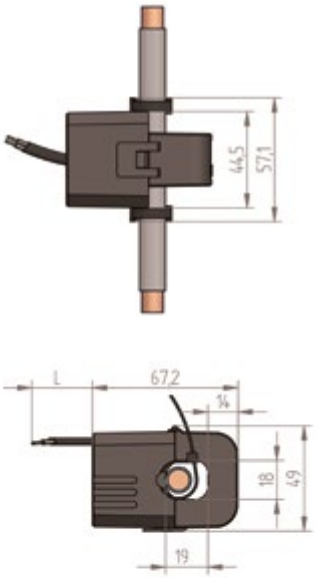

KUW2/40

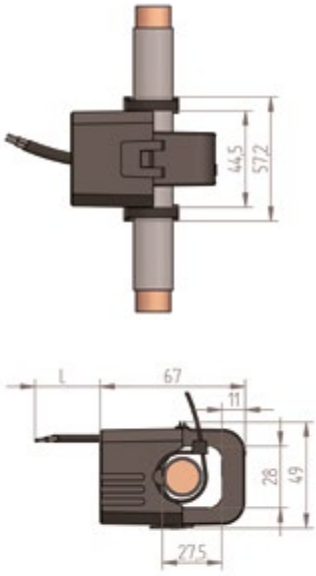

KUW4/60

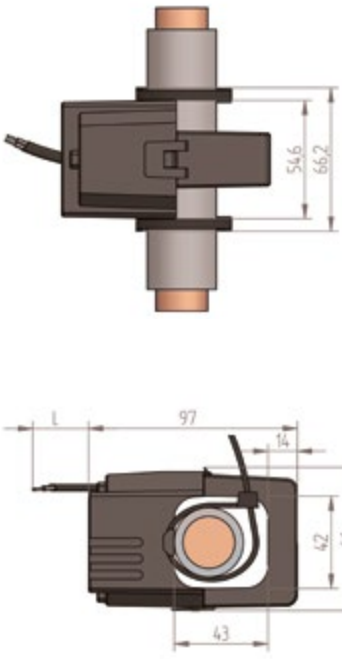

KUW4.2/60

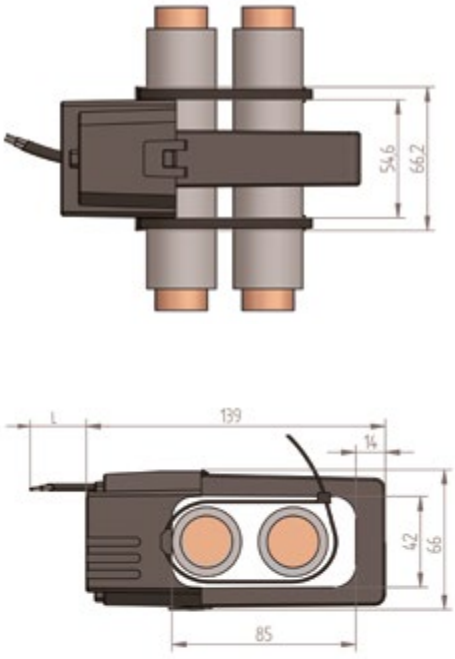

Split core current transformers



SEPARABLE CURRENT TRANSFORMERS, TYPE KBU, CLASS 0.5 AND 1

Separable current transformers are particularly suitable for retrofitting, as they can also be installed during operation and without interrupting the primary conductor. They are available in the model type KBU.



TECHNICAL DATA

SEPARABLE CURRENT TRANSFORMERS, TYPE KBU

TYPE	PRIMARY CURRENT in A	SECONDARY CURRENT in A	POWER in VA	CLASS	DIMENSIONS in mm					WEIGHT in kg	ITEM NO.
					A	B	C / C1	D	E		
KBU 58	250	5	1.5	1	125	158	34 / 58	55	85	0.9	1502316
KBU 58	400	5	1	0.5	125	158	34 / 58	55	85	0.9	1502868
KBU 58	500	5	2.5	0.5	125	158	34 / 58	55	85	0.9	1502819
KBU 58	600	5	2.5	0.5	125	158	34 / 58	55	85	1.0	1502315
KBU 58	1000	5	5	0.5	125	158	34 / 58	55	85	1.0	1502320
KBU 812	600	5	2.5	0.5	155	198	34 / 58	85	125	1.3	1502869
KBU 812	800	5	2.5	0.5	155	198	34 / 58	85	125	1.3	1502870
KBU 812	1000	5	5	0.5	155	198	34 / 58	85	125	1.3	1502871
KBU 812	1250	5	7.5	0.5	155	198	34 / 58	85	125	1.3	1502328

DIMENSIONAL DRAWINGS

All dimensions in mm

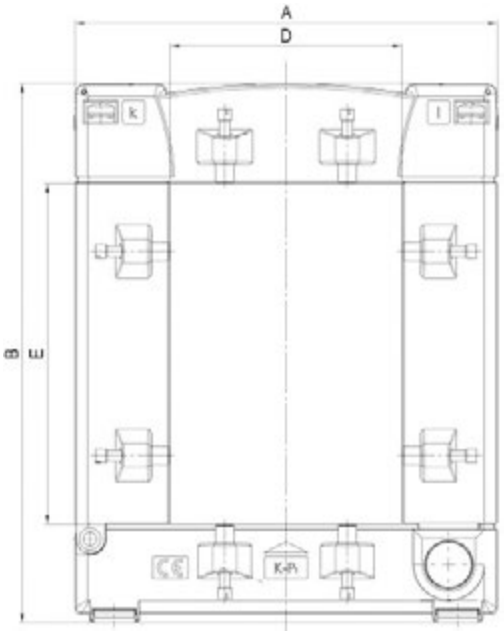

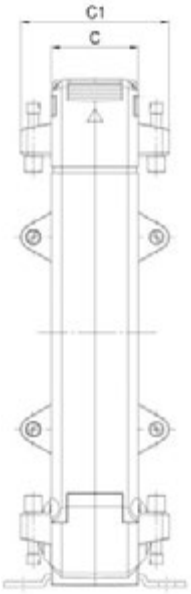

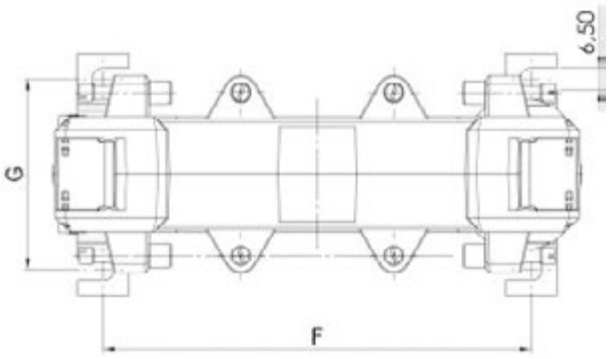

THREE-PHASE CURRENT TRANSFORMERS, TYPE ASRD 14, CLASS 0.5 AND 1

This three-phase current transformer is ideally suited for DIN rail mounting and has low space requirements due to its compact design.



TECHNICAL DATA

THREE-PHASE CURRENT TRANSFORMER, TYPE ASRD 14

TYPE	PRIMARY CURRENT in A	SECONDARY CURRENT in A	POWER in VA	CLASS	ROUND CONDUCTOR in m	DIMENSIONS in mm (W x H x D)	WEIGHT in kg	ITEM NO.
ASRD 14	50	5	1	1	13.5	105 x 90 x 64	0.5	**1503403**
ASRD 14	75	5	1.5	1	13.5	105 x 90 x 64	0.5	**1503404**
ASRD 14	100	5	2.5	1	13.5	105 x 90 x 64	0.5	**1503405**
ASRD 14	125	5	2.5	0.5	13.5	105 x 90 x 64	0.5	**1503406**
ASRD 14	150	5	2.5	0.5	13.5	105 x 90 x 64	0.5	**1503407**

DIMENSIONAL DRAWINGS

All dimensions in mm

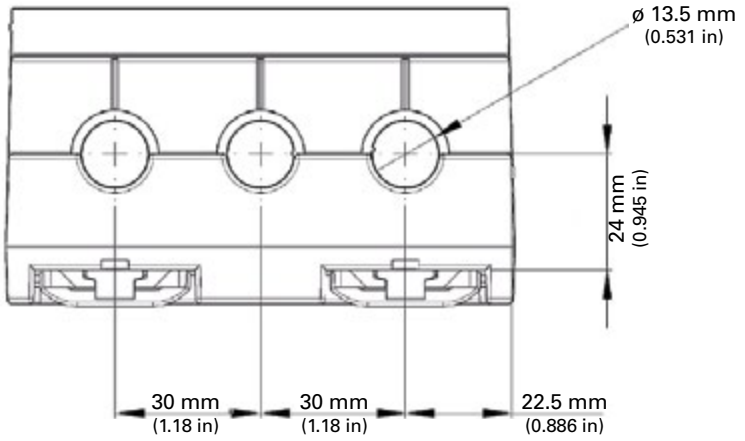

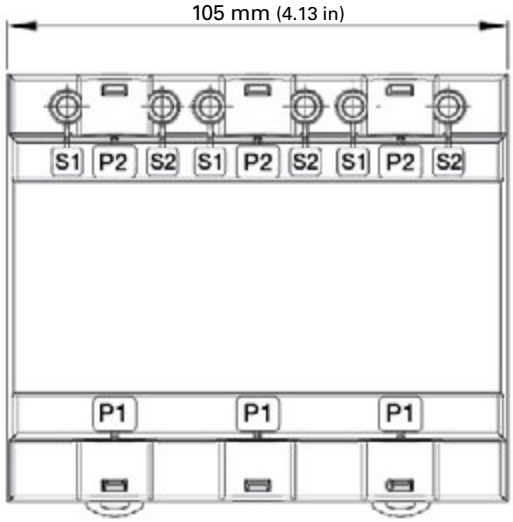

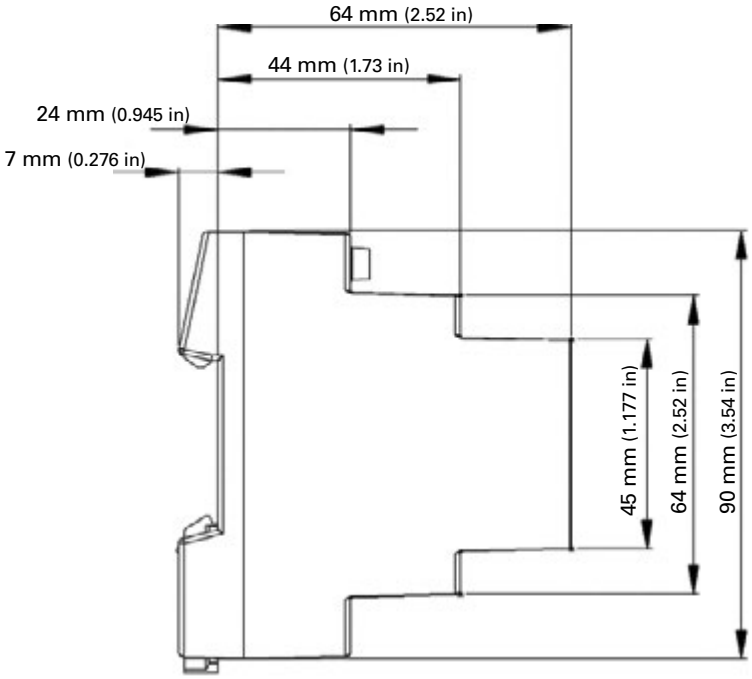

DIN RAIL CURRENT TRANSFORMERS WITH VOLTAGE TAP-OFF & BACK-UP FUSE, CLASS 0.5 & 1

DIN rail current transformers can be mounted quickly and easily and connection errors can be avoided. The integrated current transformer enables accurate current and voltage measurement.



TECHNICAL DATA

DIN RAIL CURRENT TRANSFORMERS

TYPE	RATIO	POWER in VA	CLASS	DIMENSIONS in mm (W x H x D)	WEIGHT in kg	ITEM NO.
CT 35/1A	35/1 A	0.2	1	approx. 72 x 32 x 96	0.2	**1503002**
CT 64/1A	64/1 A	0.2	0.5	approx. 72 x 32 x 96	0.2	**1503003**

DIMENSIONAL DRAWINGS

All dimensions in mm

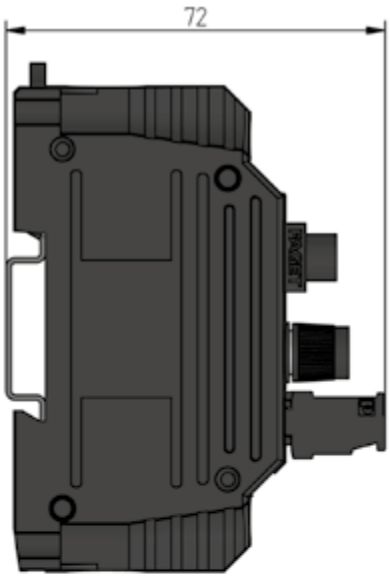

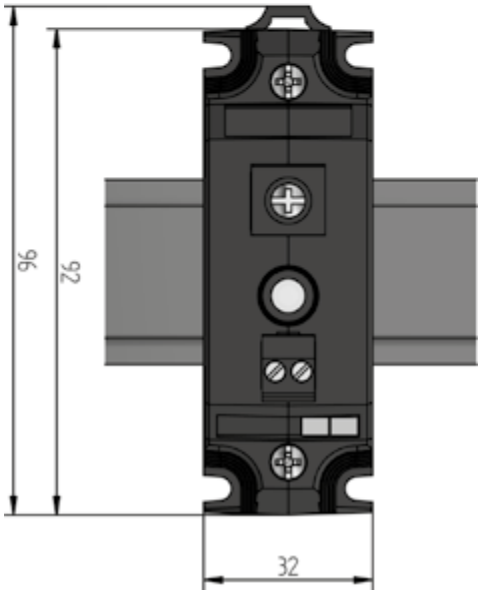

COMPACT CURRENT TRANSFORMERS TYPE CT27, CLASS 1

The CT27 compact current transformer is especially suitable for digital meters. It can be used on a 3-phase circuit breaker and complies with IEC 61869-2. It is possible to plug together several transformers of this series.



TECHNICAL DATA

COMPACT CURRENT TRANSFORMER, TYPE CT27

TYPE	PRIMARY CURRENT in A	SECONDARY CURRENT in A	POWER in VA	MAX Ø OF PRIMARY CONDUCTOR in mm	DIMENSIONS in mm (W x H x D)	WEIGHT in kg	ITEM NO.
CT27-35	35	1	0.2	7.5	approx. 27 x 46 x 23	0.05	**1503080**
CT27-64	64	1	0.2	7.5	approx. 27 x 46 x 23	0.04	**1503081**
ACCESSORIES							
Snap-on mounting for DIN rail, suitable for design type CT27-35 and CT27-64					approx. 41 x 14 x 27	approx. 0.1	**0909010**

DIMENSIONAL DRAWINGS

All dimensions in mm

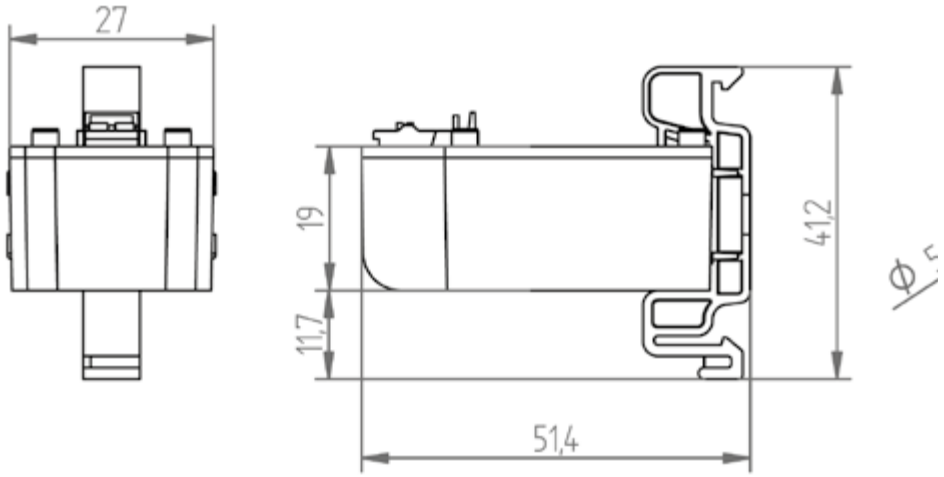

FLEXIBLE CURRENT TRANSFORMERS – ROGOWSKI COIL

The Rogowski coil is used to measure the current of AC currents and is primarily used for particularly simple retrofitting in existing systems – either around busbars or around power cables.

The output signal of a Rogowski coil differs from that of conventional current transformers. This must be taken into account when connecting. Janitza offers Rogowski coils that are used in conjunction with a measuring transducer as well as Rogowski coils that are suitable for direct connection to corresponding measuring devices.



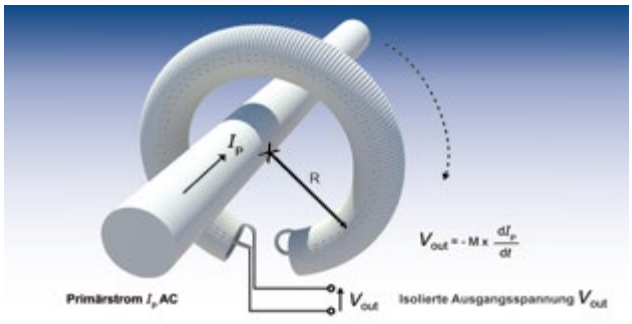

The Rogowski coil is a helical wire coil. It can be placed around an electrical conductor very easily.

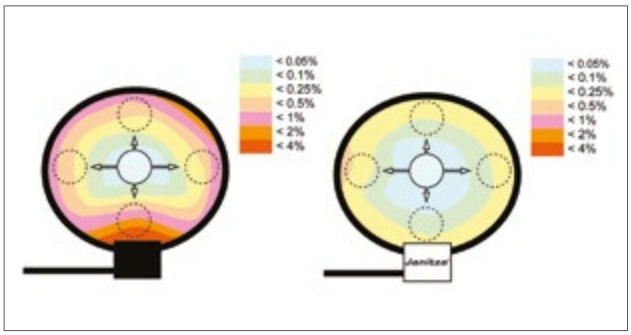

The Rogowski coil is a helical wire coil. It can be placed around an electrical conductor very easily.

COMPATIBILITY OF THE ROGOWSKI COILS

ITEM NO.	DIAMETER	ROGOWSKI TYPE	PRIMARY RANGE*	OUTPUT SIGNAL	UMG 96-PQ-L-LP	MODUL 800-CT8-LP	RCM 201-ROGO	MEASURE-MENT TRANSDUCER ROGOTRANS 8KA
1503635	90 mm	Passive	10 A – 8000 A	100 mV/1 kA	•	–	–	–
1503636	175 mm	Passive	10 A – 8000 A	100 mV/1 kA	•	–	–	–
1503637	270 mm	Passive	10 A – 8000 A	100 mV/1 kA	•	–	–	–
1503638	360 mm	Passive	10 A – 8000 A	100 mV/1 kA	•	–	–	–
1503639	550 mm	Passive	10 A – 8000 A	100 mV/1 kA	•	–	–	–
1503622	90 mm	Passive	0,1 A – 125 A	100 mV/1 kA	–	–	•	–
1503623	175 mm	Passive	0,1 A – 125 A	100mV/1 kA	–	–	•	–
1503624	270 mm	Passive	0,1 A – 125 A	100 mV/1 kA	–	–	•	–
1503625	360 mm	Passive	0,1 A – 125 A	100 mV/1 kA	–	–	•	–
1503626	550 mm	Passive	0,1 A – 125 A	100 mV/1 kA	–	–	•	–
1503609	70 mm	Passive	1 A – 8000 A	22.5 mV /1 kA	–	–	–	•
1503610	175 mm	Passive	1 A – 8000 A	22.5 mV /1 kA	–	–	–	•
1503611	300 mm	Passive	1 A – 8000 A	22.5 mV /1 kA	–	–	–	•

** The specifications of the primary range apply in conjunction with the respective compatible device.*

FLEXIBLE CURRENT TRANSFORMERS – MEASUREMENT TRANSDUCER

The "RogoTrans 8kA" measurement transducer for the Rogowski current transformer records alternating currents or a voltage signal and has a standardized output signal of 0...1 A.

The measuring range is up to 8000 A, the power supply is 24 V DC. The design of the measurement transducer is very compact and it can be mounted on a DIN rail.



CONNECTION EXAMPLE

Connection example of Rogowski current transformer with measurement transducer to UMG 96RM

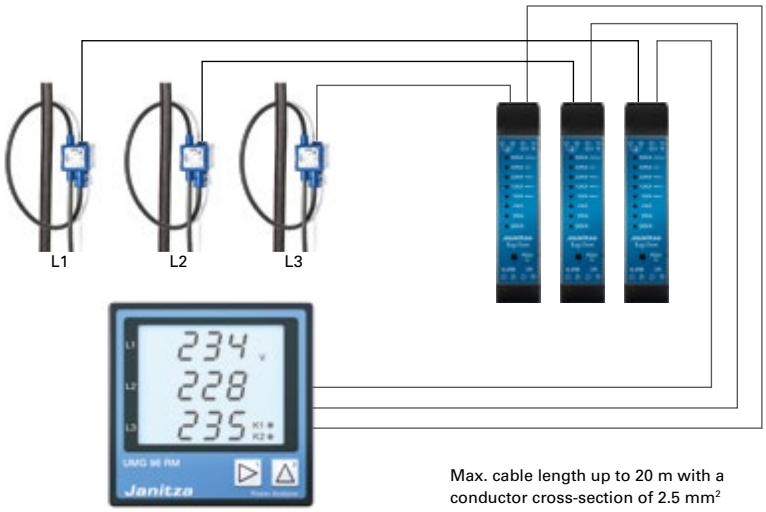

Max. cable length up to 20 m with a conductor cross-section of 2.5 mm²

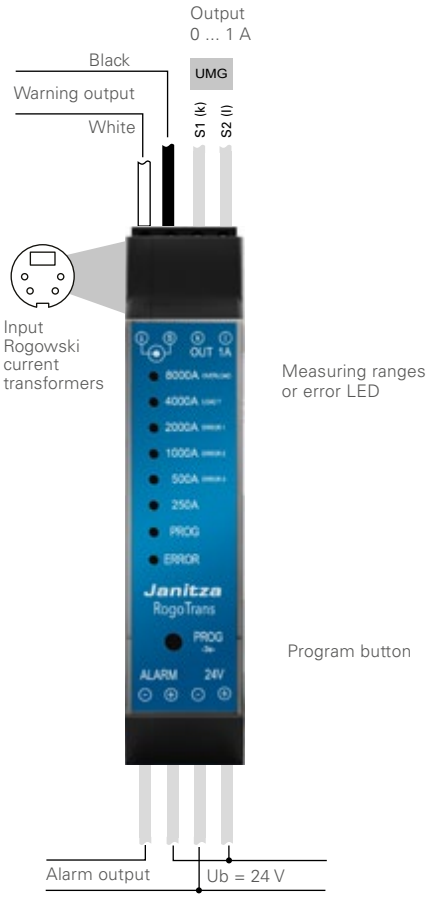

TECHNICAL DATA

MEASUREMENT TRANSDUCER	
ITEM NO.	**1503646**
Dimensions	22.5 x 100 x 110 mm (W x H x D)
Weight	approx. 0.2 kg
Power supply	24 VDC (18 ... 36 V) / 1 A
Current draw	< 300 mA (at 1 A output current) < 80 mA (without output current)
Input	Janitza Rogowski coil max. 90 mV (4000 A range)
Current measuring ranges	1 ... 8000 A 1 ... 4000 A 1 ... 2000 A 1 ... 1000 A 1 ... 500 A 1 ... 250 A
Measuring range setting (button) LED (yellow)	Wear-free measuring range selection via microcontroller and PGA
Operating and measuring range display	via 6 LEDs (green)
Phase angle	< 1°
Linearity error at 50 Hz measurement error at 50 Hz	< 0.2% in all measuring ranges < 0.2% in all measuring ranges
Input impedance	10 k Ω in all measuring ranges
Signal output	0 ... 1 A
Overrange	110%
Load	0 ... 1.5 Ω
Linearity error, load 0 ... 1.5 Ω	< 0.02%
Alarm output	24 V DC / 200 mA (potential-free opto output, opens in case of error)
Alarm messages (via red LED)	Overload (out of range) Load too high (output circuit) Undervoltage (24 V)
Alarm delay	60 seconds
Protection level	IP30
Ambient temperature	–20 °C ... +70 °C
Mounting orientation	Vertical; when using several devices side by side, a minimum distance of 5 mm must be maintained between the devices (heat generation)
Storage temperature	–25 °C ... +85 °C

TECHNICAL DATA

ROGOWSKI-SPULEN FÜR MESSUMFORMER „ROGOTRANS“

DESIGNATION	DIAMETER in mm	LENGTH in m	WEIGHT in g	ITEM NO.
Rogowski current transformer Ø 70 mm	70	3	192	**1503609**
Rogowski current transformer Ø 175 mm	175	3	206	**1503610**
Rogowski current transformer Ø 300 mm	300	3	222	**1503611**

Note: To ensure trouble-free operation of Rogowski current transformers always requires that a combination of the coil and the Janitza measurement transducer „RogoTrans“ (item no. 1503613) or „RogoTrans 8kA“ (item no. 1503646) be used! In addition, a 24 V DC power supply is required.

ROGOWSKI COILS FOR “ROGOTRANS” TRANSMITTERS

ITEM NO.	15.03.609	15.03.610	15.03.611
Max. output voltage	30 V	30 V	30 V
Primary current *1	up to 10,000 A*1	up to 10,000 A*1	up to 10,000 A*1
Ratio (@ 50 Hz)	44.44 kA/V	44.44 kA/V	44.44 kA/V
Rated frequency	50/60 Hz	50/60 Hz	50/60 Hz
Secondary voltage	22.5 mV (at 1000 A / 50 Hz)	22.5 mV (at 1000 A / 50 Hz)	22.5 mV (at 1000 A / 50 Hz)
Mutual inductance	71.98 nH	72.314 nH	72.84 nH
Temperature coefficient of M	±30 ppm/K	±30 ppm/K	±30 ppm/K
Frequency bandwidth (cable length 1.5 m)*2	420 kHz*2	350 kHz*2	300 kHz*2
Phase shift*3	0.004°*3	0.004°*3	0.004°*3
Coil inductance	180 µH	343 µH	566 µH
Coil resistance	56 Ω	105 Ω	170 Ω
Ratio error (centered)	0.5 ... 0.5% Class 0.5 Accuracy according to IEC 61869-2	0.5 ... 0.5% Class 0.5 Accuracy according to IEC 61869-2	0.5 ... 0.5% Class 0.5 Accuracy according to IEC 61869-2
Ratio error (all positions)*4	0.75 ... 0.75*4 incl. positioning error	0.75 ... 0.75*4 incl. positioning error	0.75 ... 0.75*4 incl. positioning error
Linearity error	none	none	none
Influence by external currents*5	±0.2*5	±0.2*5	±0.2*5

**1 In combination with Janitza measurement transducer RogoTrans, up to 4000 A or RogoTrans 8kA, up to 8000 A.*
**2 The model of the frequency bandwidth and the phase shift can be provided on request.*
**3 When installed at right angles to the conductor.*
**4 Under the condition that the Janitza Rogowski current transformer is installed perpendicular to a primary conductor of min. Ø 15 mm.*
**5 Under the condition that another conductor of min. Ø 15 mm is installed at the same height and at right angles to the Janitza Rogowski current transformer.*

TECHNICAL DATA

ROGOWSKI COILS WITH CONNECTORS FOR THE RCM 201-ROGO

DESIGNATION	DIAMETER in mm	LENGTH in mm	WEIGHT in kg	ITEM NO.
Rogowski current transformer Ø 90 mm	90	350	approx. 0,175	**1503622**
Rogowski current transformer Ø 175 mm	175	600	approx. 0,20	**1503623**
Rogowski current transformer Ø 270 mm	270	900	approx. 0,24	**1503624**
Rogowski current transformer Ø 360 mm	360	1200	approx. 0,26	**1503625**
Rogowski current transformer Ø 550 mm	550	1800	approx. 0,33	**1503626**

ROGOWSKI COILS WITHOUT CONNECTORS FOR THE UMG 96-PQ-L-LP

DESIGNATION	DIAMETER in mm	LENGTH in mm	WEIGHT in kg	ITEM NO.
Rogowski current transformer Ø 90 mm	90	350	approx. 0,175	**1503635**
Rogowski current transformer Ø 175 mm	175	600	approx. 0,20	**1503636**
Rogowski current transformer Ø 270 mm	270	900	approx. 0,24	**1503637**
Rogowski current transformer Ø 360 mm	360	1200	approx. 0,26	**1503638**
Rogowski current transformer Ø 550 mm	550	1800	approx. 0,33	**1503639**

ROGOWSKI COILS FOR THE RCM 201-ROGO

ENVIRONMENTAL CONDITIONS	
Degree of protection	IP67 (UL recognized, UL 61010-1)
Height	Up to 2000 m (6562 ft) above sea level
Operating temperature	–30 ... +80 °C (–22 ... +176 °F)
Storage temperature	–40 ... +80 °C (–40 ... +176 °F)
Relative humidity	0 ... 95%
Installation and use	Inside

COIL	
Coil length	approx. 30 ... 180 cm (15.75 ... 74.80 in) (see table on the left)
Inner diameter of the sensor	approx. 9 ... 55 cm (4.72 ... 22.83 in) (see table on the left)
Cable diameter	8.3±0.2 mm (0.33±0.008 in)
Housing material	Thermoplastic polyurethane UL94-V0
Securing	Bayonet
Weight	150 ... 500 g (0.33 ... 1.10 lb)

ELECTRICAL PROPERTIES	
Rated output power	100 mV / kA @ 50 Hz (RMS values)
Max. measurable current	100 kA
Coil resistance	70 ... 900 Ω
Positioning error	Better than ±1% of measured value
Frequency	50/60 Hz
Overvoltage category	1000 V CAT III, 600 V CAT IV
Pollution degree	2
Insulation test voltage	7400 V_{RMS} / 1 min

CONNECTION CABLE	
Type	3 x 22 AWG, shielded
Length	3 m (118.1 in)

COMPLIANCE WITH STANDARDS	
IEC, UL standards	UL 61010-1 Ed3, UL 61010-2-032, CAN/CSA-C22.2 No. 61010-1, IEC 60529

THE LINK BETWEEN HEAVY CURRENT AND MEASUREMENT TECHNOLOGY

RESIDUAL CURRENT TRANSFORMERS

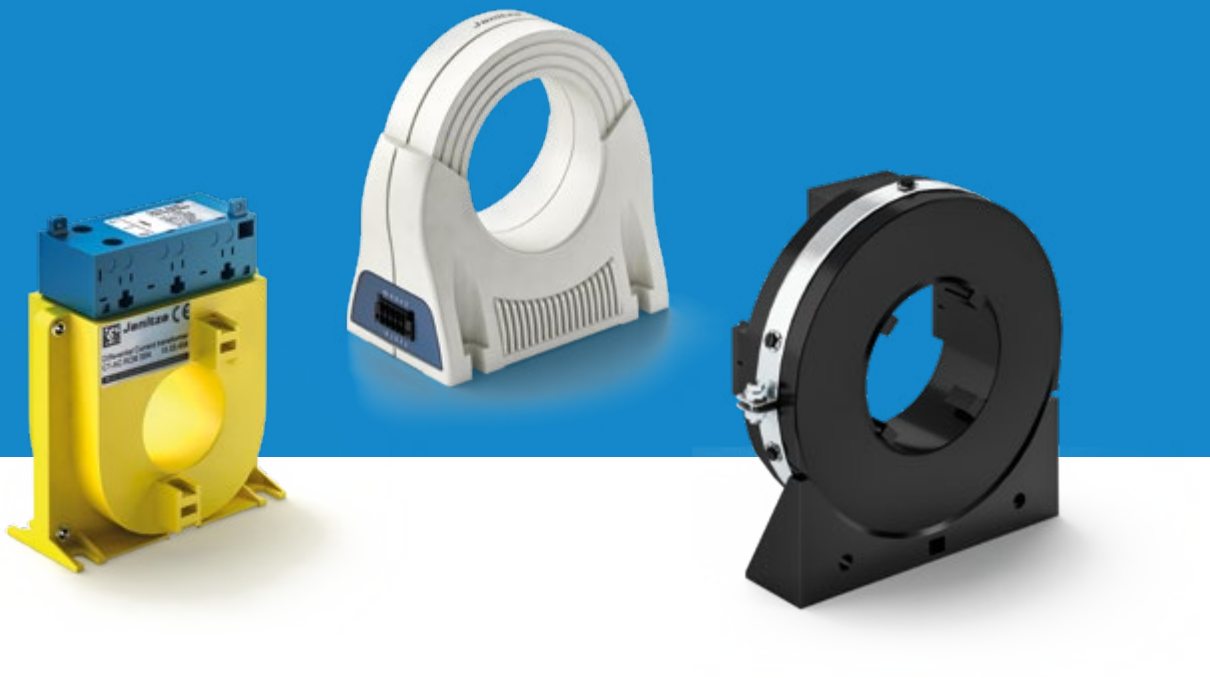

258 Separable residual current transformer
262 Plug-in residual current transformer, type A
264 Residual current transformer, type A
266 Residual current transformer, type B+

RESIDUAL CURRENT TRANSFORMER COMPATIBILITY

RCM TRANSFORMER TYPE	ITEM NO.	INTERIOR WINDOW	SEPARABLE YES/NO	TYPE OF RESIDUAL CURRENT	TRANSFORMER RATIO
DACT20	1503201	20 mm round	No	Type A (type B+ with RCM 202-AB)	600/1
DACT 35	1503202	35 mm round	No	Type A (type B+ with RCM 202-AB)	600/1
DACT 60	1503203	60 mm round	No	Type A (type B+ with RCM 202-AB)	600/1
DACT 120	1503204	120 mm round	No	Type A (type B+ with RCM 202-AB)	600/1
CT-AC RCM 35N	1503458	35 mm round	No	Type A (type B+ with RCM 202-AB)	700/1
CT-AC RCM 80N	1503459	80 mm round	No	Type A (type B+ with RCM 202-AB)	700/1
CT-AC RCM 110N	1503463	110 mm round	No	Type A (type B+ with RCM 202-AB)	700/1
CT-AC RCM 140N	1503460	140 mm round	No	Type A (type B+ with RCM 202-AB)	700/1
CT-AC RCM 210N	1503464	210 mm round	No	Type A (type B+ with RCM 202-AB)	700/1
CT-AC RCM A110N	1503462	110 mm round	Yes	Type A (type B+ with RCM 202-AB)	700/1
CT-AC RCM A150N	1503465	150 mm round	Yes	Type A (type B+ with RCM 202-AB)	700/1
CT-AC RCM A310N	1503461	310 mm round	Yes	Type A (type B+ with RCM 202-AB)	700/1
KBU 23D	1503400	20 mm x 30 mm rectangular	Yes	Type A (type B+ with RCM 202-AB)	600/1
KBU 58D	1503401	50 mm x 80 mm rectangular	Yes	Type A (type B+ with RCM 202-AB)	600/1
KBU 812D	1503402	80 mm x 120 mm rectangular	Yes	Type A (type B+ with RCM 202-AB)	600/1
CT-AC/DC type B+ 35 RCM	1503469	35 mm round	No	Type B+ (AC and DC)	4-20 mA (300 mA/5 A)
CT-AC/DC type B+ 70 RCM	1503468	70 mm round	No	Type B+ (AC and DC)	4-20 mA (300 mA/5 A)

PRIMARY CURRENT WITH UMG 96RM-E, UMG 509-PRO, UMG 512-PRO, UMG 96RM-PN MODULE 96-RCM-E, UMG 801	PRIMARY CURRENT WITH RCM 202-AB	COMPATIBILITY WITH UMG 96RM-E, UMG 509-PRO, UMG 512-PRO, UMG 96RM-PN MODULE 96-RCM-E, UMG 801	COMPATIBILITY RCM 202-AB
18000 mA	20 A AC / 20 A DC	Yes	Yes
18000 mA	20 A AC / 20 A DC	Yes	Yes
18000 mA	20 A AC / 20 A DC	Yes	Yes
18000 mA	20 A AC / 20 A DC	Yes	Yes
21000 mA	20 A AC / 20 A DC	Yes	Yes
21000 mA	20 A AC / 20 A DC	Yes	Yes
21000 mA	20 A AC / 20 A DC	Yes	Yes
21000 mA	20 A AC / 20 A DC	Yes	Yes
21000 mA	20 A AC / 20 A DC	Yes	Yes
21000 mA	20 A AC / 20 A DC	Yes	Yes
21000 mA	20 A AC / 20 A DC	Yes	Yes
21000 mA	20 A AC / 20 A DC	Yes	Yes
21000 mA	20 A AC / 20 A DC	Yes	Yes
18000 mA	20 A AC / 20 A DC	Yes	Yes
18000 mA	20 A AC / 20 A DC	Yes	Yes
18000 mA	20 A AC / 20 A DC	Yes	Yes
300 mA	Not compatible	only UMG 96RM-E, Module 96-RCM-E and UMG 801	Not compatible
300 mA	Not compatible	only UMG 96RM-E, Module 96-RCM-E and UMG 801	Not compatible

SEPARABLE RESIDUAL CURRENT TRANSFORMERS, TYPE KBU

Separable residual current transformers are particularly suitable for retrofitting, as they can also be installed during operation and without interrupting the primary conductor. They are available in the models type KBU and type CT-AC.



TECHNICAL DATA

SEPARABLE RESIDUAL CURRENT TRANSFORMER, TYPE KBU

TYPE	RATIO	MAX. PRIMARY RESIDUAL CURRENT in mA*1	MAX. WIRE DIAMETER in mm	BUSBAR RAIL in mm	DIMENSIONS in mm					WEIGHT in kg	ITEM NO.
					A	B	C / C1	D	E		
KBU 23D*2	600/1	18000	4 x approx. 10 (rm–10 qmm) or 8 x 7 (rm–6 qmm)	max. 20 x 30	93	106	34/58	20	30	0.7	**1503400**
KBU 58D*2	600/1	18000	4 x approx. 27 (rm–240 qmm) or 8 x 20 (rm–95 qmm)	max. 50 x 80	125	158	34/58	50	80	1.1	**1503401**
KBU 812D*2	600/1	18000	4 x approx. 42 (rm–500 qmm) or 8 x 29 (rm–240 qmm)	max. 80 x 120	155	198	34/58	85	125	1.4	**1503402**

ACCESSORIES

Load (3.9 Ω) with 1.5 m connecting cable and spring terminal	**1503086**

**1 When using the analog inputs of the UMG 96RM-E, UMG 96RM-PN, UMG 509-PRO and UMG 512-PRO*
**2 If the residual current transformers of the KBU series are used in conjunction with the UMG 20CM, the measuring range of the UMG 20CM can be increased from 900 mA or 1 A to 14 A or 15 A by connecting the load (item no. 1503086) in series.*

DIMENSIONAL DRAWINGS

All dimensions in mm

KBU 23D

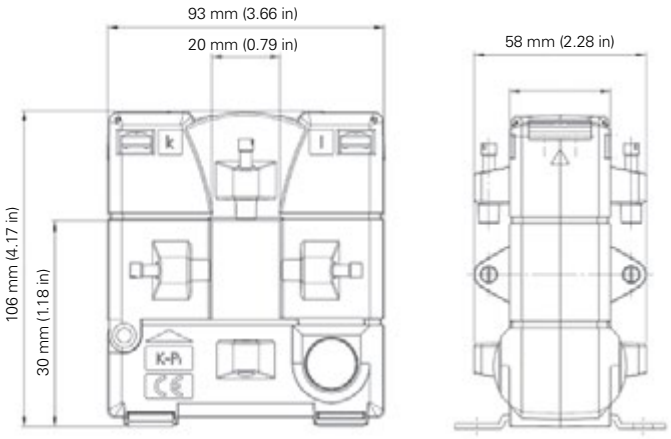

KBU 58D

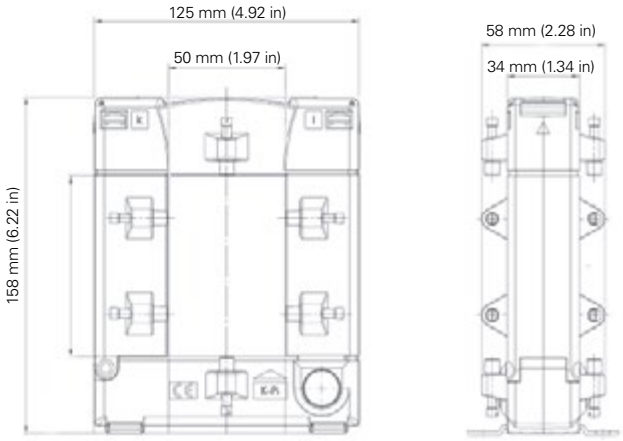

KBU 812D

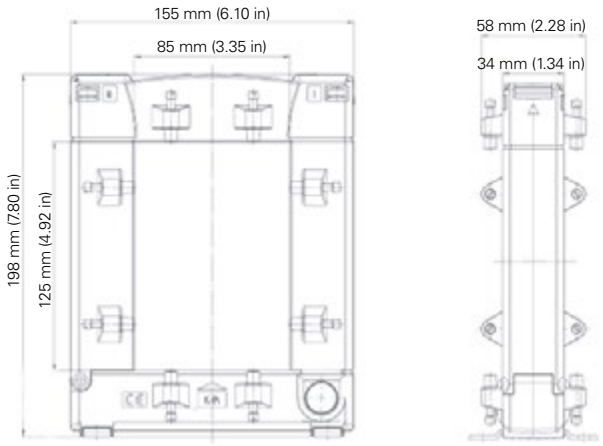

SEPARABLE RESIDUAL CURRENT TRANSFORMER, TYP CT-AC

Separable residual current transformers are particularly suitable for retrofitting, as they can also be installed during operation and without interrupting the primary conductor. They are available in the models type KBU and type CT-AC.

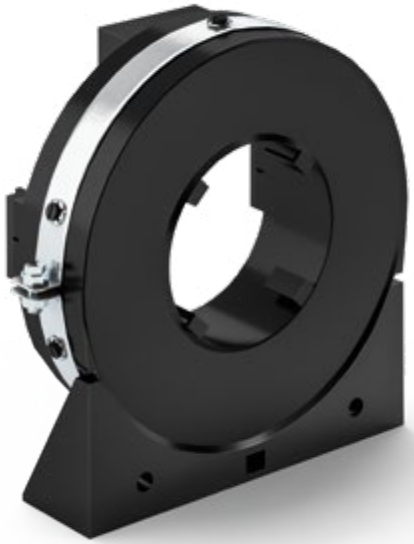

TECHNICAL DATA

SEPARABLE RESIDUAL CURRENT TRANSFORMER, TYPE CT-AC

TYPE	RATIO	MAX. PRIMARY RESIDUAL CURRENT in mA*1	MAX. WIRE DIAMETER in mm	BUSBAR RAIL in mm	DIMENSIONS in mm			WEIGHT in kg	ITEM NO.
					A	B	C		
CT-AC RCM A110N	700/1	21000	4 x approx. 44 (rm–500 qmm) or 8 x 33 (rm–300 qmm)	max. 100 x 20	110	235	219	2.35	1503462
CT-AC RCM A150N	700/1	21000	4 x approx. 60 (rm–500 qmm) or 8 x 44 (rm–500 qmm)	max. 147 x 20	150	275	259	2.50	1503465
CT-AC RCM A310N	700/1	21000	4 x approx. 124 (rm–500 qmm) or 8 x 92 (rm–500 qmm)	max. 200 x 20	310	400	416	3.80	1503461

**1 When using the analog inputs of the UMG 96RM-E, UMG 96RM-PN, UMG 509-PRO and UMG 512-PRO*

DIMENSIONAL DRAWINGS

All dimensions in mm

CT-AC RCM A310N

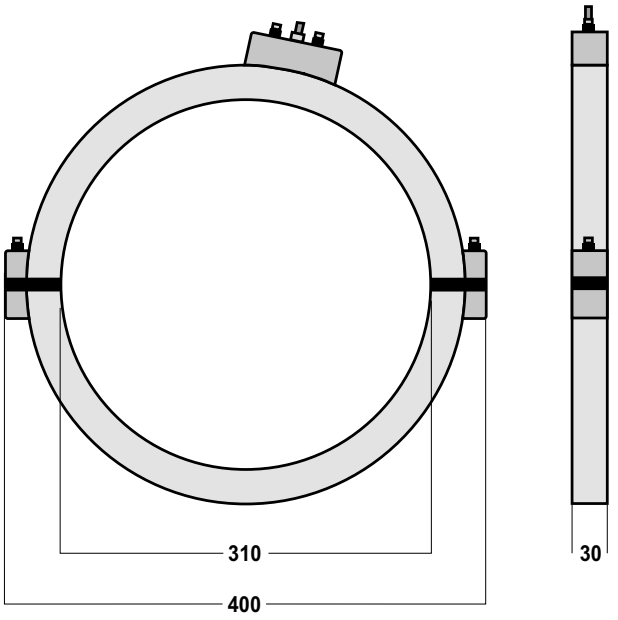

CT-AC RCM A110N/150N

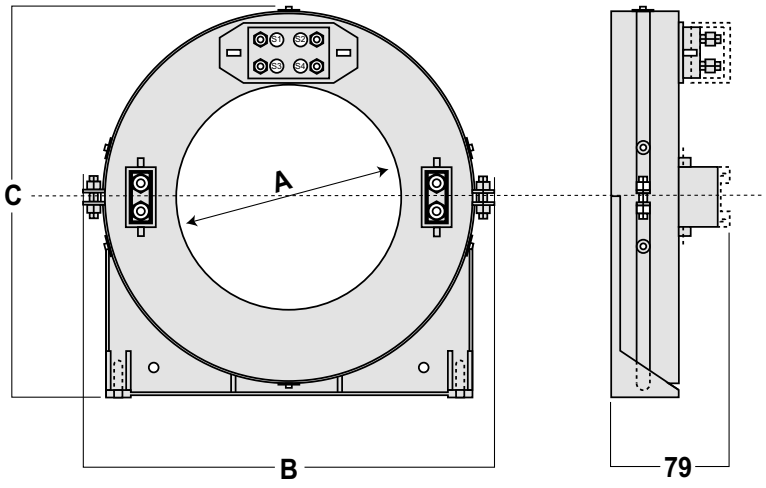

PLUG-IN RESIDUAL CURRENT TRANSFORMERS, TYPE A

Plug-in residual current transformers are particularly suitable for new installations and in areas where an interruption of the primary conductor is possible. They are characterized by a very compact design and are suitable for the detection of very small currents.



TECHNICAL DATA

PLUG-IN RESIDUAL CURRENT TRANSFORMERS, TYPE A

TYPE	RATIO	MAX. PRIMARY RESIDUAL CURRENT in mA*1	MAX. WIRE DIAMETER in mm	BUSBAR RAIL in mm	DIMENSIONS in mm					WEIGHT in kg	ITEM NO.
					A	B	C	D	E		
CT-AC RCM 35N	700/1	21000	4 x approx. 14 (rm–35 qmm) or 8 x 10 (rm–10 qmm)	max. 30 x 10	35	92	113	36	56	0.25	1503458
CT-AC RCM 80N	700/1	21000	4 x approx. 32 (rm–300 qmm) or 8 x 24 (rm–150 qmm)	max. 60 x 20	80	125	160	36	56	0.40	1503459
CT-AC RCM 110N	700/1	21000	4 x approx. 44 (rm–500 qmm) or 8 x 33 (rm–300 qmm)	max. 100 x 20	110	165	198	36	56	0.56	1503463
CT-AC RCM 140N	700/1	21000	4 x approx. 56 (rm–500 qmm) or 8 x 42 (rm–300 qmm)	max. 120 x 20	140	200	234	36	56	0.75	1503460
CT-AC RCM 210N	700/1	21000	4 x approx. 85 (rm–500 qmm) or 8 x 62 (rm–500 qmm)	max. 200 x 20	210	290	323	44	64	1.28	1503464

ACCESSORIES

Snap-on mounting for DIN rail, suitable for design type CT-AC RCM 35N/80N/110N	0909011

**1 When using the analog inputs of the UMG 96RM-E, UMG 96RM-PN, UMG 509-PRO and UMG 512-PRO, UMG 801 and module 96-RCM-E.*

DIMENSIONAL DRAWINGS

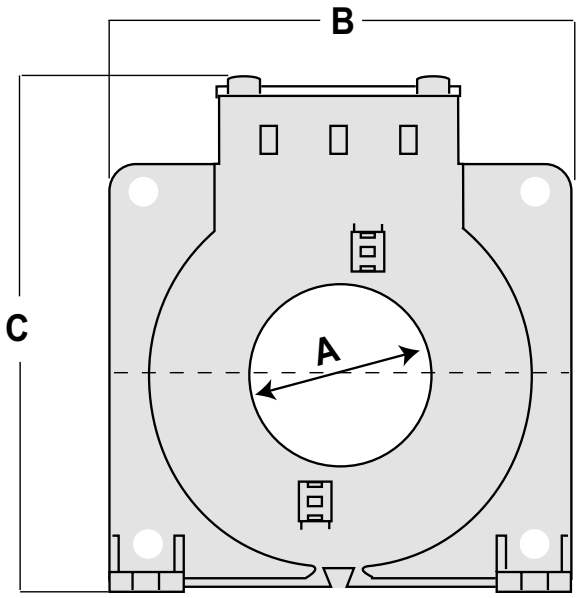

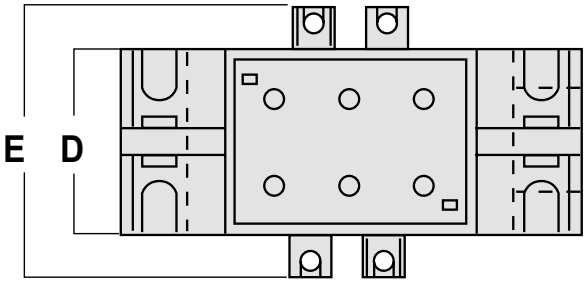

RESIDUAL CURRENT TRANSFORMER, TYPE A

The residual current transformer type A is perfectly suited for residual current detection in 3 or 4-wire AC networks. It can detect even the smallest residual currents and can be used flexibly due to its wide frequency range. Connection is simple and convenient via a 4-pole spring-loaded terminal.

Thanks to its integrated surge protection, the converter offers a high level of operational safety. It can also be conveniently mounted on a 35 mm DIN top-hat rail using an optionally available snap-on mounting bracket (except for DACT 120).



TECHNICAL DATA

RESIDUAL CURRENT TRANSFORMER, TYPE A – 0.03 A SECONDARY CURRENT

TYPE	RATIO	MAX. PRIMARY RESIDUAL CURRENT in A*1	MAX. WIRE DIAMETER in mm	ROUND CONDUCTOR in mm	WIDTH in mm	WEIGHT in kg	ITEM NO.
DACT 20	600/1	18	4 x approx. 8 (rm–10 qmm) or 8 x 5.5 (rm–6 qmm)	20	82	0.15	**1503201**
DACT 35	600/1	18	4 x approx. 14 (rm–35 qmm) or 8 x 10 (rm–10 qmm)	35	104.5	0.24	**1503202**
DACT 60	600/1	18	4 x approx. 24 (rm–185 qmm) or 8 x 16 (rm–50 qmm)	60	135	0.39	**1503203**
DACT 120	600/1	18	4 x approx. 44 (rm–500 qmm) or 8 x 33 (rm–300 qmm)	120	210	0.95	**1503204**

ACCESSORIES	
Snap-on mounting for DIN rail, suitable for design type DACT 20/35	**1502144**
Snap-on mounting for DIN rail, suitable for design type DACT 60	**1502149**

**1 When using the analogue inputs of the UMG 96RM-E, UMG 96RM-PN, UMG 509-PRO, UMG 512-PRO, UMG 801, UMG 96-PA and UMG 96-PQ-L (in conjunction with the 96-RCM-E module).*

DIMENSIONAL DRAWINGS

All dimensions in mm

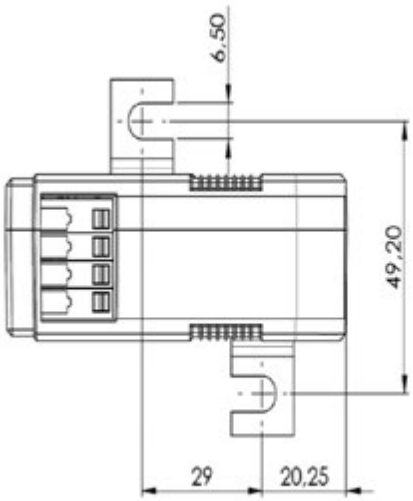

RESIDUAL CURRENT TRANSFORMERS, TYPE B+

This intelligent residual current transformer monitors DC residual currents of type B+ up to 300 mA. It requires a 24 V DC supply voltage.



TECHNICAL DATA

RESIDUAL CURRENT TRANSFORMERS, TYPE B+

TYPE	OPERATING VOLTAGE, DC	MAX. PRIMARY RESIDUAL CURRENT in mA	MAX. WIRE DIAMETER in mm	BUSBAR RAIL in mm	WEIGHT in kg	ITEM NO.
CT-AC/DC type B+ 35 RCM	24 V (21.6 ... 26.4 V)	300	4 x approx. 14 (rm–35 qmm) or 8 x 10 (rm–10 qmm)	max. 30 x 10	0.86	**1503469**
CT-AC/DC type B+ 70 RCM	24 V (21.6 ... 26.4 V)	300	4 x approx. 28 (rm–240 qmm) or 8 x 23 (rm–150 qmm)	max. 60 x 20	1.20	**1503468**

ACCESSORIES

Switching power supply with stepped/circuit-breaker design prim. 85 - 264 V 50/60 Hz, sec. 24 V DC; 4.2 A Dimensions in mm (W x H x D) 70 x 90 x 54.5; weight: approx. 270 g	**1605014**

TYPE	DIMENSIONS in mm							
	A	B	C	D	E	F	G	H
CT-AC/DC type B+ 35 RCM	35	99	106	69	66	87	113	104
CT-AC/DC type B+ 70 RCM	70	134	141	69	66	100	143	104

DIMENSIONAL DRAWINGS

All dimensions in mm

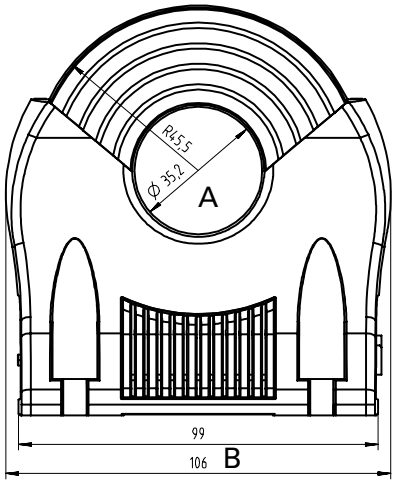

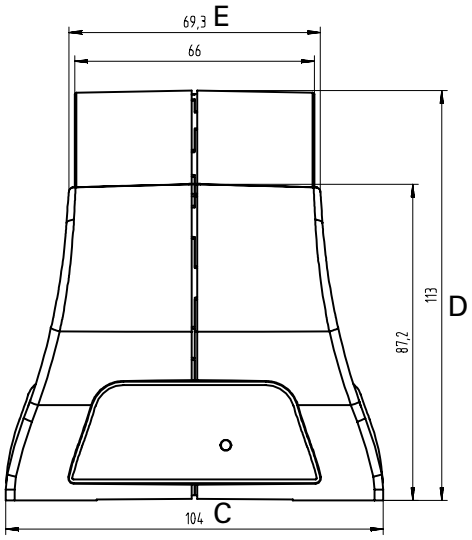

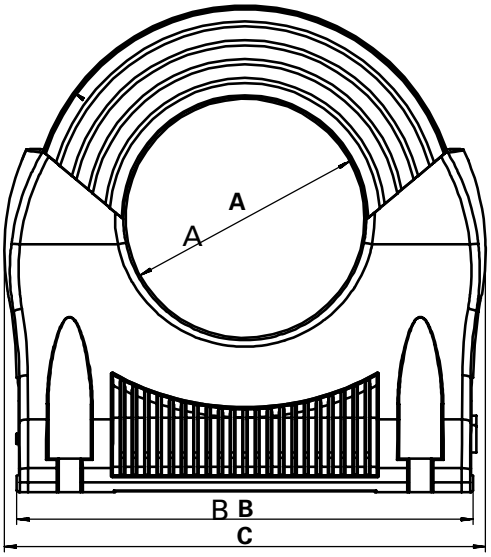

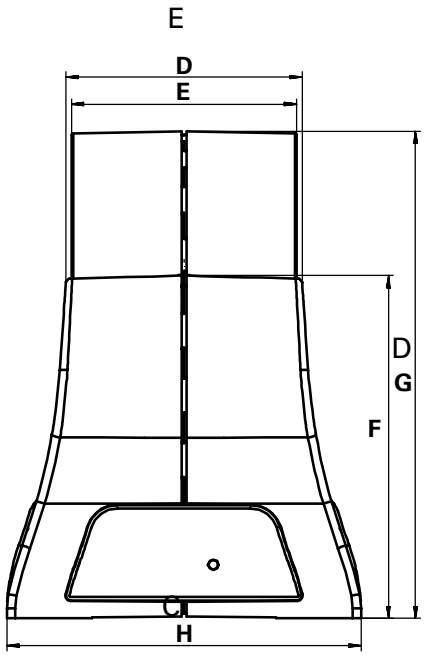

PROTECTION AND SAFETY THROUGH MOUNTING & INSTALLATION AIDS

ACCESSORIES

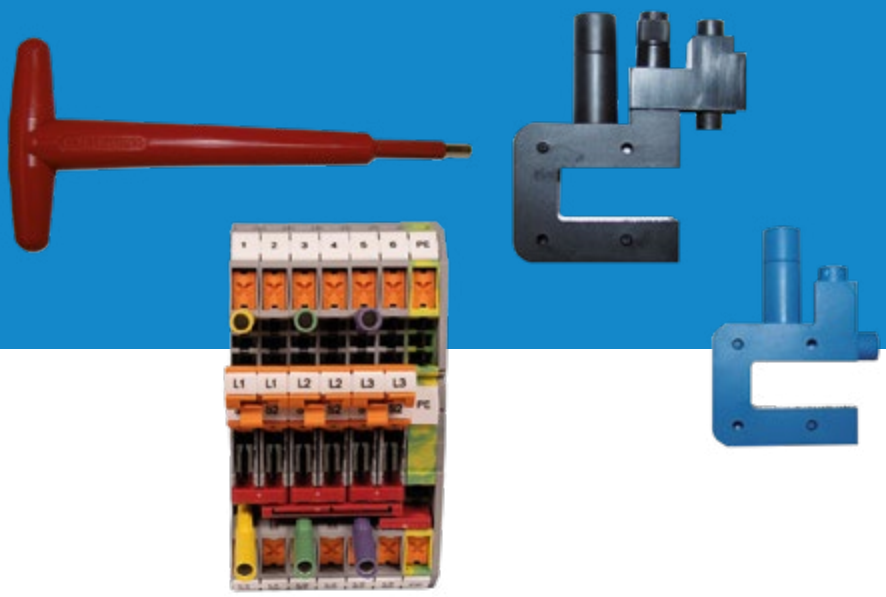

270 Voltage tap-offs
273 Current transformer terminal strip

VOLTAGE TAP-OFFS

- Terminals for tapping the voltage on live rails
- Suitable for tapping the voltage for energy measurement devices
- Fuse directly on the rail
- Primary connection with M8 Allen screw
- Short-circuit resistance, 70 kA at 400 V / 50 Hz
- High operational safety





TECHNICAL DATA

VOLTAGE TAP-OFFS

TYPE	COLOR	DESCRIPTION	BACK-UP FUSE in A	CROSS SECTION, CONNECTING MEASURING CABLE, in mm²	DIMENSIONS in mm		WEIGHT in kg	ITEM NO.
					A	B		
ZK4S	Black	With fuse	6.3	1.5 – 4	71	78	0.2	1011525
ZK4B	Blue	Without fuse	–	0 – 16	58.2	76	0.1	1011526

ACCESSORIES			
1 set of voltage tap-offs	3 pieces ZK4S (item no. 1011525); 1 piece ZK4B (item no. 1011526)	0.7	1011527
ZK4R	Insulated tool for securing the tap-off; 1,000 V, EN / IEC 60900	0.9	1011528

DIMENSIONAL DRAWINGS

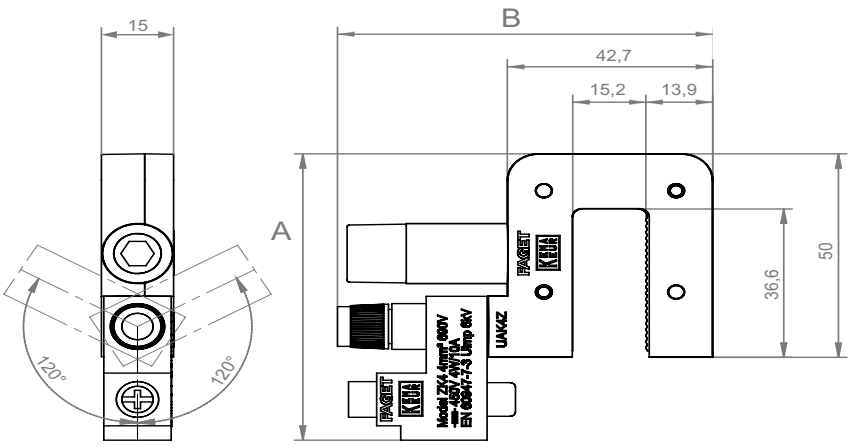

VOLTAGE TAP-OFFS

- Fused voltage tap-off for measurement purposes
- Easy mounting under existing fastening points directly on the busbar
- Compact housing
- Supplied with a 5 x 25 mm, 2 A, 450 V, F, 70 kA fuse



TECHNICAL DATA

VOLTAGE TAP-OFFS

TYPE	COLOR	PRIMARY CONNECTION in mm	BACK-UP FUSE in A	CROSS SECTION, CONNECTING MEASURING CABLE, in mm²	DIMENSIONS in mm		WEIGHT in kg	ITEM NO.
					A	B		
ZK4/M6	Black	6	2	1.5 – 4	18.8	13.5	0.03	1011534
ZK4/M8	Black	8	2	1.5 – 4	23.2	17	0.03	1011535

DIMENSIONAL DRAWINGS

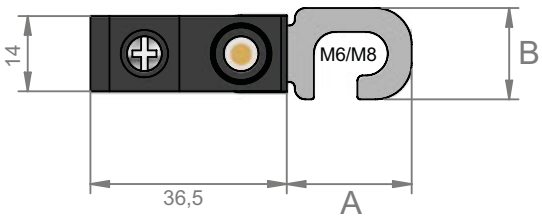

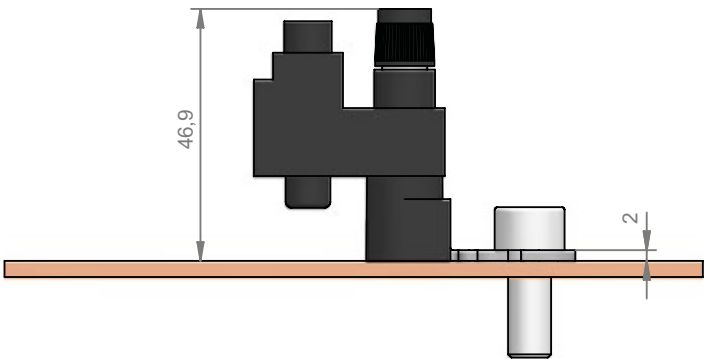

VOLTAGE TAP-OFFS

- The retrofit connection system for installation in power and street distributors under voltage
- Connection to standard elements such as busbars, nuts, bolts, V-clamps or NH fuses
- Safe and quick installation on live cables, no need to disconnect the devices from the mains
- Flexible connection options including high-security fuse
- The original touch protection of the NH strip fuse switches is retained



TECHNICAL DATA

VOLTAGE TAP-OFF CONLOX® RETROFIT CONNECTION SYSTEM

TYPE	COLOR	DESCRIPTION	BACK-UP FUSE in A	CROSS SECTION, CONNECTING MEASURING CABLE, in mm²	WEIGHT in kg	ITEM NO.
Hex 19	yellow	Voltage tap-off for screw heads or nuts size M12	6	0.75 – 2.5	0.2	**1011512**
Hex 19 N	blue	Neutral conductor tap for screw heads or nuts size	–	0.75 – 2.5	0.2	**1011513**
Socket 6	yellow	Voltage tap-off on hexagon socket with 6 mm	6	0.75 – 2.5	0.1	**1011514**
Piggybag long	yellow	Voltage tap-off for connection to NH fuse blade	6	0.75 – 2.5	0.4	**1011515**
Busbar 5	yellow	Voltage tap-off on busbar with 5 mm thickness	6	0.75 – 2.5	0.3	**1011516**
Busbar 5 N	blue	Neutral conductor tap on busbar with 5 mm thickness	–	0.75 – 2.5	0.3	**1011517**
Busbar 10	yellow	Voltage tap-off on busbar with 10 mm thickness	6	0.75 – 2.5	0.3	**1011518**
Busbar 10 N	blue	Neutral conductor tap on busbar with 10 mm thickness	–	0.75 – 2.5	0.3	**1011519**
Busbar 6	yellow	Voltage tap-off on busbar with 3-6 mm thickness	6	0.75 – 2.5	0.3	**1011520**
Busbar 6 N	blue	Neutral conductor tap on busbar with 3-6 mm thickness	–	0.75 – 2.5	0.3	**1011521**
Socket 6 Temp	red	Temperature measurement on hexagon socket with 6 mm (PT 100)	–	Connection cable	0.4	**1011522**
Busbar 3-6 Temp 100	red	Temperature measurement near busbar with 3–6 mm thickness (PT 100)	–	Connection cable	0.4	**1011523**

ACCESSORIES

PlugSafe Tool Holder	WERA handle for holding the CONLOX® PlugSafe tool, for safe and quick assembly of all products of CONLOX® Systems.				0.4	**1011529**
PlugSafe Toll 12KK170	CONLOX® PlugSafe Tool in short, for the safe and quick installation of all products of the CONLOX® system. A perfect fit for Wera.				0.2	**1011530**
PlugSafe Tool 12KK305	CONLOX® PlugSafe Tool long, for the safe and quick installation of all products of the CONLOX® system. A perfect fit for Wera.				0.3	**1011531**

CURRENT TRANSFORMER TERMINAL STRIP

- Application: Short-circuiting of current transformers, Control measurement of energy measurement devices
- For DIN rail mounting
- Completely equipped for 4 conductors
- Consists of: Cross disconnect terminal with measuring and testing setup
- Insulated bridges for grounding and shorting of the transformer terminal



TECHNICAL DATA

CURRENT TRANSFORMER TERMINAL STRIP

TYPE	NOMINAL VOLTAGE (V)	RATED SURGE VOLTAGE (kV)	CONDUCTOR TYPE	CROSS SECTION (mm²)	DIMENSIONS IN MM (W x H x D)	WEIGHT in kg	ITEM NO.
Current transformer terminal strip	800	8	single or fine-stranded	0.5 – 10	86 x 108 x 65	0.30	1507002

DIMENSIONAL DRAWINGS

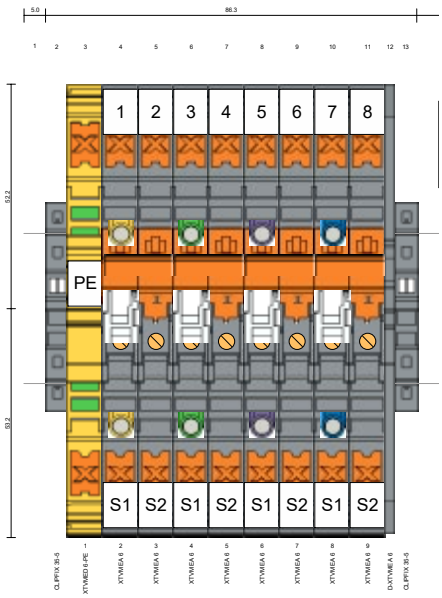

ACCESSORIES



Janitza Universal Gateway JUG 25
Modbus to MQTT Gateway



EasyGateway V50
LTE modem



Gateway MBUS-GEM
Communication interface for the integration of supply meters



PowerToStore
Buffer power supply with capacitors



Switching power supply
Switching power supply for DIN rail mounting



Switching power supply
Switching power supply with circuit-breaker design



Switching power supply
Switching power supply with circuit-breaker design



USB/RS-485 converter cable
Accessories for connecting to a PC



Accessories
Mounting and installation aids

ACCESSORIES

Accessories

276 Janitza Universal Gateway JUG 25
278 EasyGateway V50
280 Gateway MBUS-GEM
281 PowerToStore
282 Switching power supply for DIN rail mounting
283 Switching power supply with stepped/circuit-breaker design
285 USB/RS-485 converter cable
286 Accessories – Mounting and installation aids

JANITZA UNIVERSAL GATEWAY JUG 25

Flexible configurable for Modbus and MQTT

- Configurable gateway for connecting Modbus RTU and Modbus TCP slave devices to an MQTT broker
- Supports bidirectional communication between Modbus and MQTT
- Reads data from Modbus slave devices
- Writes received data back to Modbus slave devices
- Sends Modbus data to freely configurable MQTT topics (publish)
- Receives MQTT topics and transmits the data to Modbus (subscribe)
- Flexible use for integration into existing system architectures
- Can be operated as a Modbus TCP to RTU converter, seamlessly connecting modern TCP systems to existing RTU devices



Similar image

- Suitable for: UMG 96-EL / UMG 96-PA / UMG 96-PQ-L / UMG 96-PQ-L-LP / UMG 96RM-CBM / UMG 96RM-P / UMG 96RM-PN / UMG 96RM-E / UMG 96-S2 / UMG 103-CBM / UMG 509-PRO / UMG 512-PRO / UMG 604-PRO / 605-PRO / UMG 800 / UMG 801 / RCM 201-Rogo / RCM 202-AB / MID-Energiezähler (EMD 485-CT3-A, EMD 485-P1, EMD 485-P3, B21, B23, B24)

TECHNICAL DATA

JANITZA UNIVERSAL GATEWAY JUG 25	
ITEM NO.	**1506087**
GENERAL	
Net weight	max. 130 g (0.29 lb.)
Dimensions	approx. 110 mm x 100 m x 25 m
RTC	Gold Cap for real-time functionality
TRANSPORT AND STORAGE The following specifications apply for devices transported and stored in the original packaging.	
Temperature	–20 .. +70 °C (–4 .. +158 °F)
Relative humidity	10 .. 95 % not condensing
AMBIENT CONDITIONS DURING OPERATION	
The JUG 25 is intended for weather-protected, stationary use.	
Operating temperature range	–20 .. +60 °C (–4 .. +140 °F)
Relative humidity	10 .. 95 % not condensing
Operating altitude	0 .. 1000 m above see level (3280 ft ASL)
Installation position	DIN rail mounting
Ventilation	no external ventilation required
Protection against foreign bodies and water	IP20 according to EN60529
SUPPLY VOLTAGE	
Power supply	24 V DC (12 .. 36 V), SELV/PELV
Power consumption	max. 200 mA at 24 V DC
INTERFACE	
USB	1x USB-A
Ethernet	2x RJ45, 10/100 Mbit/s
Seriell	1x RS232 (RxD/TxD) + 1x RS232 (RTS/CTS) insulated or 2x RS232 (RxD/TxD) insulated or 1x RS232 (RxD/TxD) + 1x RS485 insulated
Modbus RTU	1 x RS485
Mass storage MMC/SD/SDIO	1x microSD card slot (max. 128 GB, Class 10)
WLAN	possible via Wi-Fi USB adapter

EASYGATEWAY V50 LTE MODEM



Data connection and easy initial commissioning

- Communication gateway for wireless and wired communication
- The EasyGateway V50 connects UMG measurement devices with an Ethernet interface to a PC via the LTE network
- The GridVis® Power Grid Monitoring Software includes a driver that enables simple establishment of a connection to the meters via the V50
- Connecting the EasyGateway to the meter
- Setting up the meter in GridVis® and selecting EasyGateway communication
- Activation of the connection via GridVis® required
- Suitable for: UMG 604-PRO, UMG 605-PRO, UMG 800, UMG 801, UMG 96RM-E, UMG 96-PA*[1], UMG 96-PQ-L*[1], UMG 509-PRO and UMG 512-PRO
- Connection of the following devices via RS-485 (max. 10-15 devices): UMG 96RM-CBM, UMG 103-CBM

*[1] *The 96-RCM-E module (item no. 5232010) is required as an extension to connect the devices via Ethernet.*

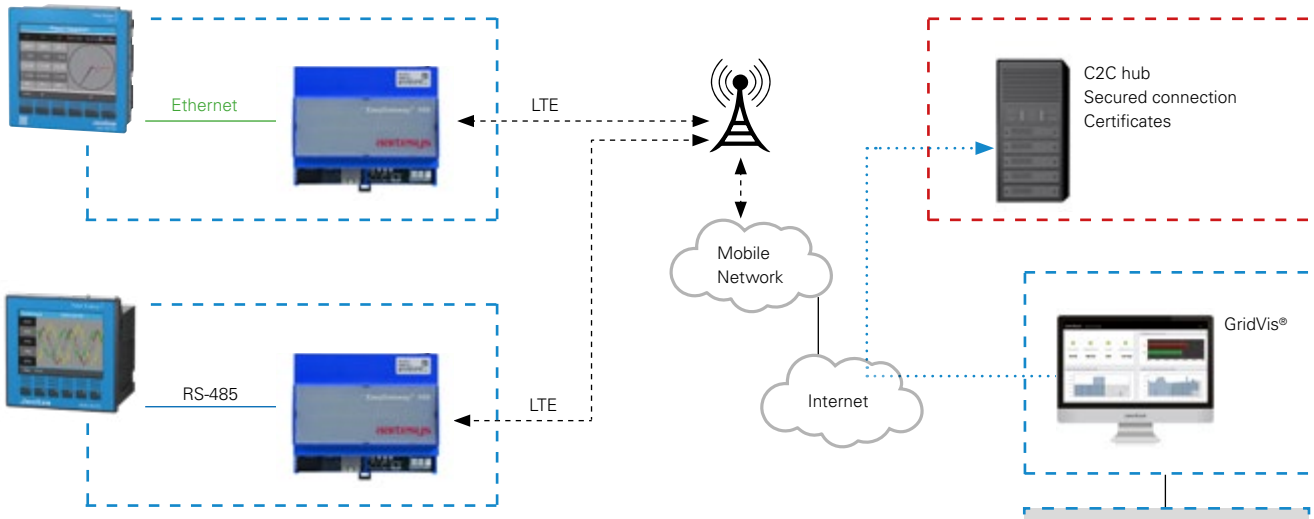

Fig.: SSL -encrypted data transmission – Parametrization of the measurement devices via GridVis® / LTE also possible

Managed Service – Connect-2-Control*2

- Connect-2-Control (C2C) is a simple and secure managed solution
- It ensures easy access to the meters (location-independent) via public IP networks (Internet, mobile data networks, company networks)
- Certificate-protected security (SSL)
- SSL-encrypted from PC to gateway
- No VPN tunnel necessary
- Managing static IP addresses

*2 *The Connect-2-Control service for managing the local, static IP addresses of the Janitza UMGs as well as commissioning and administration is provided by the company aartesys. A corresponding form for filling in is enclosed with the EasyGateway delivery or can be found at: https://www.janitza.de/c2c-service*

TECHNICAL DATA

EASYGATEWAY V50	
EASYGATEWAY V50 LTE CAT4, LAN, RS-485	**1506110**
EASYGATEWAY V50 LTE CAT4, LAN	**1506111**
GENERAL	
Display elements	3 LEDs, bi-color red/green, for initial commissioning and operating indicator lamp 1 LED, orange, GSM status
Communication	Unrestricted Internet capability with certificate-based authentication and encryption
LAN/WAN connection	Fast Ethernet 10/100mbps, Auto-MDIX, RJ45, shielded, 2 status LEDs
Mobile communication	GPRS (quad band GPRS class 10) or HSPA+ (dual band GSM/GPRS/EDGE, dual band UMTS/HSPA) or LTE
SIM	Pluggable and/or solderable SIM (SIM multiplexer)
Local IP interface	Fast Ethernet 10/100mbps, Auto-MDIX, RJ45, shielded, 2 status LEDs
Local serial interfaces	RS-485, RS-422 and RS-232 via USB adapter
Power supply	85 to 264 V AC, optionally 18 to 75 V DC or 9 to 27 V DC
Housing	85 to 264 V AC, optionally 18 to 75 V DC or 9 to 27 V DC
Environment	Temperature range -20 °C - +70 °C, relative humidity max. 95%
Dimensions (W x H x D)	107.5 x 90 x 62 mm
Weight	280 g
ACCESSORIES	
LTE antenna for outdoor mounting	1506115
Extension cable, 2 m	1506099
Extension cable, 5 m	1506091
Extension cable, 10 m	1506092

GATEWAY M-BUS-GEM



Gateway M-Bus to Modbus TCP

- Communication interface for the integration of supply meters into GridVis®
- Connection at the control level
- Standard according to IEC6115
- Supply voltage: 24 VDC ± 5%, screw terminal
- M-Bus according to EN 13757-2, screw terminal
- Ethernet. 100 MBit, RJ45 socket, shielded
- Powerful drivers for connecting up to 80 standard loads
- Very compact design (W x H x D in mm) 35 x 89 x 58
- Space requirement 2TE width for DIN rail mounting, 35 mm DIN rail
- Galvanic isolation of M-Bus and RJ45
- Suitability for use in industrial environments
- Prerequisite: GridVis® Expert & Commissioning

Commissioning by Janitza is recommended.

TECHNICAL DATA

GATEWAY MBUS-GEM	
ITEM NO.	**1506108**
GENERAL	
Architecture	Controller-based gateway
Supply	24 VDC, < 300 mA, max. 2.5 mm²
M-Bus connections	Screw terminal, max. 2.5 mm²
Ethernet connection	100 MBit, RJ45, shielded
Dimensions	35 x 89 x 58 (W x H x D in mm)
Mounting	DIN mounting rail, 35 mm, IP40
Max. baud rate	300, 2400 or 9600 bps
Number of slaves	max. 80 standard loads
IP address	freely configurable or via DHCP
TCP port	freely configurable

POWERTOSTORE

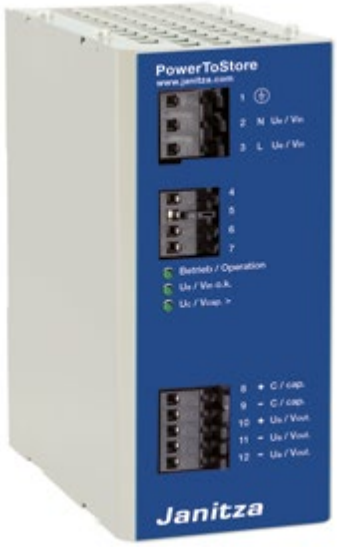

Buffer power supply with capacitors

- Typically used to bridge momentary interruptions
- Works as an energy storage device using integrated ultracapacitors
- When the supply voltage is interrupted, energy from the ultracapacitors is released in a controlled manner
- A buffer module feeds the load until complete discharge
- The buffer time depends on the charge state of the capacitor and the discharge current
- Can only be networked with 24 V devices
- Maintenance free for life
- Compactly built into a housing
- Deep-discharge resistant, thus unlimited shelf life
- Operation at extreme temperatures possible
- No gassing, therefore installation in hermetically sealed enclosures feasible
- Fast availability due to short recharge time after discharge

TECHNICAL DATA

PowerToStore	
ITEM NO.	**1506405**
INPUT	
Nominal input voltage	115 – 230 V AC
Stored energy in Ws	1500
OUTPUT	
Voltage output in buffer mode	24 VDC, constant
Nominal output current	3 A
Current limiting	1.05 ... 1.2 x Inom
Efficiency Ua = 23.5 V DC, Ia = Inom	> 90%
GENERAL	
Connection type, input U_E and output U_A	2.5 mm²
Connection type, messages I/O	1 mm²
Protection level	IP20
Type	PTS2403
Storage temperature and ambient temperature	–40 … +60 °C
Weight	0,85 kg
Dimensions in mm (W x H x D)	72 x 153 x 130

Note: The UMG 604-PRO / UMG 605-PRO / UMG 96RM power quality analyzers are supplied by the buffer unit (item no. 1506405) in the event of a momentary interruption of up to 225 sec.

SWITCHING POWER SUPPLY FOR DIN RAIL MOUNTING

- 100–240 V wide range input
- Configurable voltage output
- Compact design, width only 22.5 mm
- Simple DIN rail mounting
- Full power between: –10 °C and +60 °C



TECHNICAL DATA

SWITCHING POWER SUPPLY FOR DIN RAIL MOUNTING	
ITEM NO.	**1605012**
INPUT	
Input frequency	50 – 60 Hz, ± 6%
Input voltage	100 – 240 V AC, –15% / +10%
OUTPUT	
Power output	30 W
Voltage output	24 VDC ... 28 VDC configurable
Output current	1.3 A at 24 V 1.1 A at 28 V
GENERAL	
Conductor connection technology	Screw connection
Mounting	DIN rail
Operating temperature range	–10° C to +70° C
Weight	140 g
Dimensions	22.5 x 75 x 91 mm (W x H x D)

SWITCHING POWER SUPPLY WITH STEPPED/CIRCUIT-BREAKER DESIGN

- Universal input 85~264 V AC (277 V AC max. Betriebsspannung)
- Power consumption without load < 0.3 W
- Insulation class II
- DC output voltage adjustable (21,6–29 V)
- Protection from: Short circuit / overload / overvoltage
- Cooling by free air circulation (operating temperature: –30 °C ... +70 °C)
- Mountable on DIN rail acc. to TS-35/7.5 or 15
- Overvoltage category III
- LED display for power-on status



TECHNICAL DATA

SWITCHING POWER SUPPLY WITH STEPPED/CIRCUIT-BREAKER DESIGN	
ITEM NO.	**1605015**
INPUT	
Input frequency	47 – 63 Hz
Input voltage	85 – 264 V, universal input 110 – 230 V
OUTPUT	
Power output	15 W
Voltage output	24 V
Output current	0.63 A
GENERAL	
Technology	AC/DC
Mounting	DIN rail
Operating temperature range	–30° C to +70° C
Weight	78 g
Dimensions	17.5 x 90 x 54.5 mm (W x H x D)

SWITCHING POWER SUPPLY WITH STEPPED/CIRCUIT-BREAKER DESIGN

- Universal input 85~264 V AC (277 V AC max. operating voltage)
- Power consumption without load < 0.3 W
- Insulation class II
- DC output voltage adjustable
- Protection from: Short circuit / overload / overvoltage
- Cooling by free air circulation (operating temperature: –30 °C ... +70 °C)
- Mountable on DIN rail acc. to TS-35/7.5 or 15
- Overvoltage category III
- LED display for power-on status



TECHNICAL DATA

SWITCHING POWER SUPPLY WITH STEPPED/CIRCUIT-BREAKER DESIGN	
ITEM NO.	**1605014**
INPUT	
Input frequency	47 – 63 Hz
Input voltage	85 – 264 V, universal input 110 – 230 V
OUTPUT	
Power output	100 W
Voltage output	24 V
Output current	4.2 A
GENERAL	
Technology	AC/DC
Mounting	DIN rail
Operating temperature range	–30° C to +70° C
Weight	270 g
Dimensions	70 x 90 x 54.5 mm (W x H x D)

USB/RS-485 CONVERTER CABLE

- Cable length 1.8 m, extendable to up to 20 m
- FTDI chip
- –40 °C to 85 °C operating temperature range



TECHNICAL DATA

USB/RS-485 CONVERTER CABLE	
ITEM NO.	**1506107**
GENERAL	
Cable "Yellow"	Port A of the RS-485 interface of the meter
Cable "Orange"	Connection B of the RS-485 interface of the meter
Baud rate	9600, 19200, 38400 and 115 kBaud
Stop bits	1 or 2
Parity	EVEN, NONE, ODD

ADAPTER FOR DIN RAIL MOUNTING OF THE UMG MEASUREMENT DEVICES



DIMENSIONED DRAWING

All dimensions in mm

Front view

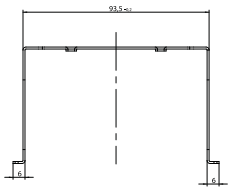

Bottom view

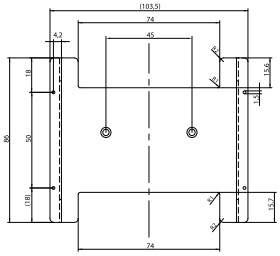

3D view

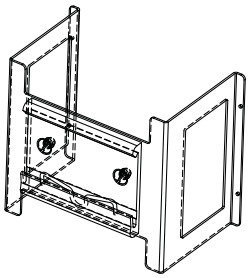

TECHNICAL DATA

ADAPTER FOR DIN RAIL MOUNTING OF THE UMG MEASUREMENT DEVICES	
ITEM NO.	**5222666**
GENERAL	
Type	AH96
Dimensions	85 x 60 x 90 (W x H x D)
Suitable for	UMG 96-S2 / UMG 96RM / UMG 96RM-M / RD 96

ADAPTER FOR DIN RAIL MOUNTING OF UMG WITH PROFIBUS



DIMENSIONED DRAWING

All dimensions in mm

Front view

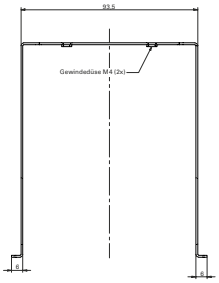

Bottom view

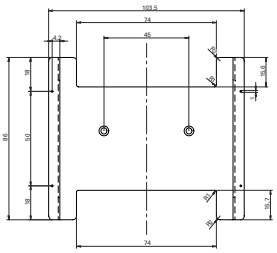

3D view

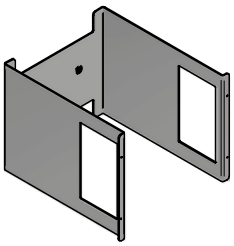

TECHNICAL DATA

ADAPTER FOR DIN RAIL MOUNTING OF UMG WITH PROFIBUS	
ITEM NO.	**5222667**
GENERAL	
Type	AH96P
Dimensions	85 x 113 x 90 (W x H x D)
Suitable for	UMG 96RM-E / UMG 96RM-CBM / UMG 96RM-P / UMG 96RM-PN / UMG 96-PA / UMG 96-PQ-L

ADAPTER FOR DIN RAIL MOUNTING

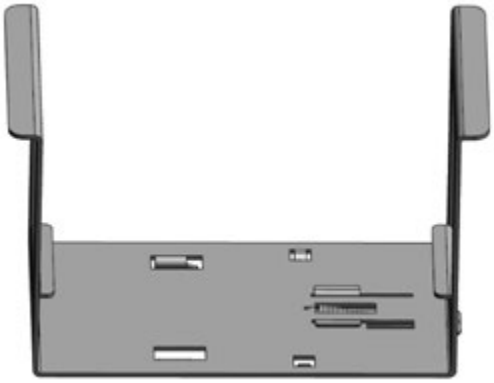

DIMENSIONED DRAWING

All dimensions in mm

Front view

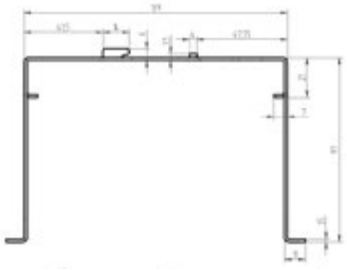

Bottom view



3D view



TECHNICAL DATA

ADAPTER FOR DIN RAIL MOUNTING	
ITEM NO.	**2904154**
GENERAL	
Type	AH144
Dimensions	74 x 161 x 97 (W x H x D)
Suitable for	UMG 509-PRO / UMG 512-PRO

OTHER ACCESSORIES

DESIGNATION	TYPE	ITEM NO.	
Seal (to IP54) for UMG 96-S2, UMG 96RM, UMG 96RM-P, UMG 96RM-M, UMG 96RM-E, UMG 96RM-PN, UMG 96-PA, UMG 96-PQ-L	D96	**2901065**	
Seal (to IP42) for UMG 509-PRO, UMG 512-PRO and Prophi®	D144	**2901903**	
Blind cover in black plastic, 96 x 96 mm	BA96	**2912001**	
Blind cover in black plastic, 144 x 144 mm	BA144	**2912002**	
Adapter plate, 144 mm to 96 mm, RAL 7032	AB144/1	**2912912**	
Adapter plate, 144 mm to 96 mm, RAL 7035	AB144/2	**2912913**	
Spacer for reducing the installation depth by 8.4 mm for UMG 96-PA Outer dimensions: 108 x 108 x 8.6 mm (W x H x D) Suitable for sheet thickness up to 6 mm	GEH96	**2901127**	


Janitza
Standort München
GridVis®

ANALYZE

Measurement data are worthless if not used. After collection, data must be analyzed and evaluated. This can be complicated and time-consuming, or the necessary knowledge may be lacking. With the GridVis® Power Grid Monitoring Software, data can be prepared and evaluated quickly. Predefined reports and visualization options such as graphs simplify analysis and documentation and facilitate standard-compliant evaluation. Apps, Jasic® and other options expand the functions and evaluation options as required.

PRODUCTS

Measurement data acquisition	**294**	ProData® – Data logger and Ethernet Modbus Gateway
Software	**302**	GridVis® – Power grid monitoring software
	322	Multiprotocol server – OPC UA
	326	Database server – Complete server with GridVis® and database
	332	Device homepage – Energy management & PQ analysis online
	334	Jasic® – Versatile programming options

MEASUREMENT DATA ACQUISITION



ProData
Data logger and
Ethernet Modbus Gateway

MEASUREMENT DATA ACQUISITION



Measurement data acquisition **294** ProData® – Data logger and Ethernet Modbus Gateway

DATA LOGGER AND ETHERNET MODBUS GATEWAY

ENERGY MANAGEMENT
- Capture non-electrical values
- Limit value monitoring
- Accurate date and time information
- Energy management according to ISO 50001

PERIPHERALS
- 15 digital/pulse inputs
- 3 digital outputs
- Thermistor input

INTERFACES
- Ethernet
- RS-485

COMMUNICATION
- Modbus TCP/IP
- NTP
- Modbus RTU

MEASUREMENT DATA MEMORY
- 32 MB

ProData®



ENERGY MANAGEMENT

Energy data acquisition with pulse inputs

COMMUNICATION

Integrated Modbus gateway for integration of energy meters

GAS & WATER

Pulse counters e.g. for Gas and water meters

DIMENSIONED DRAWING

All dimensions in mm

Front view

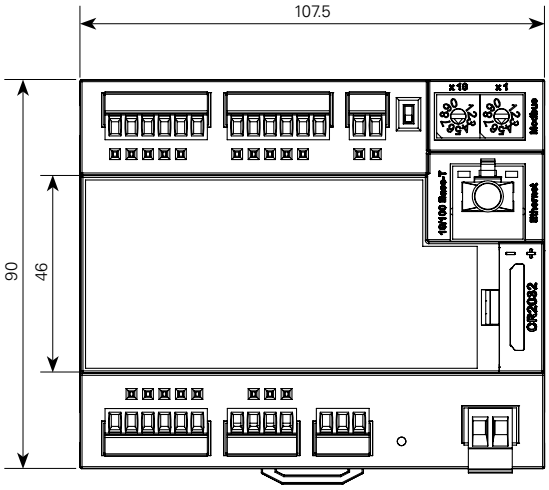

Side view

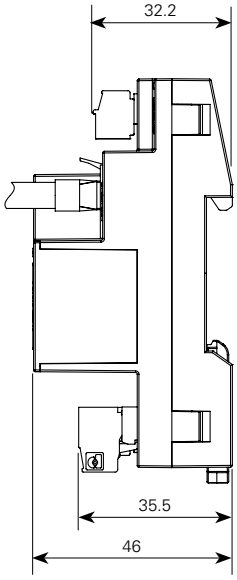



Fig.: Easy replacement of the battery during operation

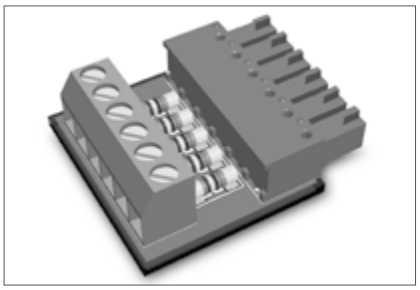

Fig.: S0 plug-in module (item no.: 52.24.111)

CONNECTION EXAMPLE

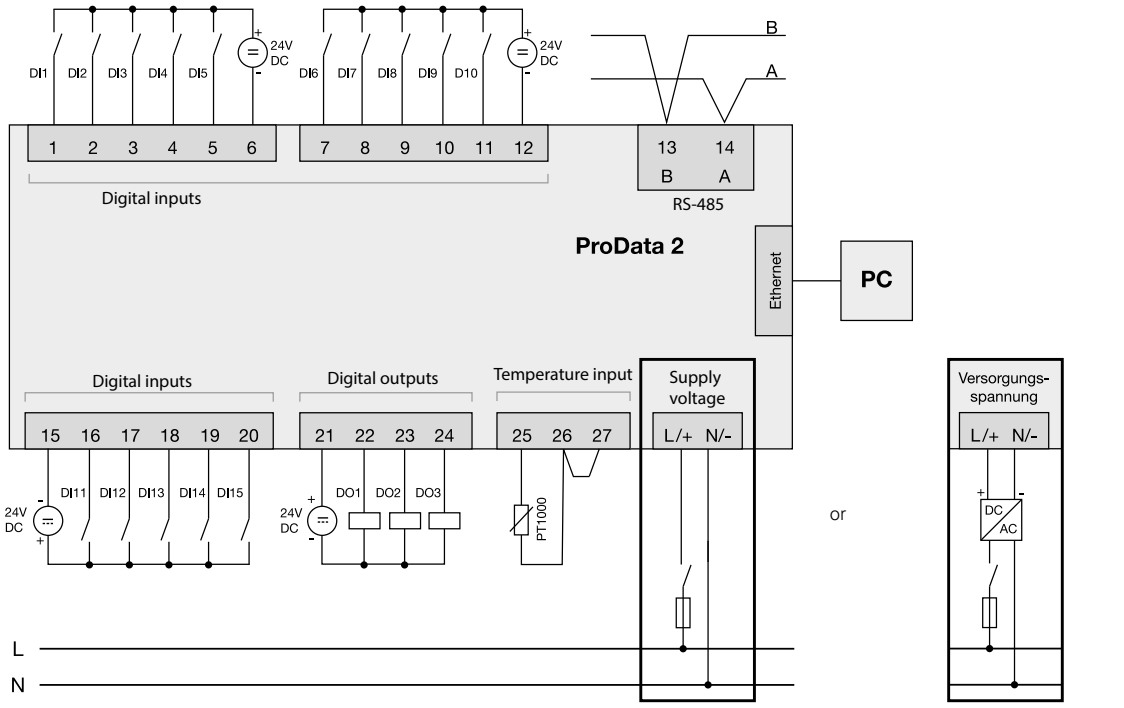

Connection example via external power supply

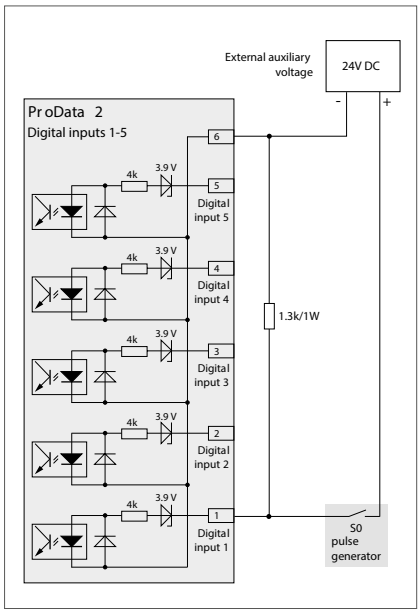

Fig.: S0 pulse output with external supply voltage and external resistor plug-in module (external resistor S0 plug-in module required for connection to S0 pulse generator, item no.: 52.24.111)

TECHNICAL DATA

ProData	
ITEM NO.	**5224011**
GENERAL INFORMATION	
Net weight (with attached connectors)	approx. 220 g (0.44 lb)
Packaging weight (including accessories)	approx. 440 g (0.97 lb)
Battery	Lithium battery CR2032, 3V (approval i.a.w. UL 1642)
Impact resistance	IK08 according to IEC 62262
TRANSPORT AND STORAGE The following information applies to devices which are transported or stored in the original packaging.	
Free fall	1 m (39.37 in)
Temperature	–40°C to +70°C (–40 °F to +158 °F)
Relative humidity	0 to 90 % RH
AMBIENT CONDITIONS DURING OPERATION	
The ProData 2 is intended for weather-protected, stationary use. Protection class II in acc. with IEC 60536 (VDE 0106, Part 1).	
Flammability rating of housing	UL 94V-0
Working temperature range	–40°C to +55°C (–40 °F to +131°F)
Relative humidity	5 to 95 % RH (at +25 °C/77 °F without condensation)
Operating altitude	0 to 2000 m (1.24 mi) above sea level
Degree of pollution	2
Mounting / assembly	Mounting rails 35 mm/1.38 in (in acc. with IEC/EN60999-1, DIN EN 50022)
Mounting position	any
Ventilation	Forced ventilation is not required
Protection against ingress of solid foreign bodies and water	IP20 in acc. with EN60529
SUPPLY VOLTAGE	
Installation overvoltage category	300 V CAT II
Protection of the supply voltage	Fuse: 6 A Char. B (approved in acc. with UL/IEC)
Nominal range	20 V–250 V (45–65 Hz) or DC 20 V–300 V
Operating range	±10 % of nominal range
Power consumption	max. 4 VA / 2 W
TERMINAL CONNECTION CAPACITY (SUPPLY VOLTAGE) Conductors to be connected. Only one conductor can be connected per terminal!	
Single core, multi-core, fine-stranded	0.2–4 mm^2, AWG 24-12
Cable end sleeve (not insulated)	0.2–4 mm^2, AWG 24-12
Cable end sleeve (insulated)	0.2–2.5 mm^2, AWG 26-14
Tightening torque	0.4–0.5 Nm (3.54–4.43 lbf in)
Stripping length	7 mm (0.276 in)
DIGITAL OUTPUTS, DIN EN 62053-31:1998 (IEC 62053-31:1998 CLASS B) 3 digital outputs, semiconductor relays, not short-circuit proof.	
Operating voltage	20 V–30 V DC (SELV or PELV supply)
Switching voltage	max. 60 V DC
Switching current	max. 50 mA_{eff} DC
Pulse output (energy pulse)	max. 20 Hz
Pulse output	in acc. with DIN EN 62053-31:1998 (IEC 62053-31:1998 class B)

DIGITAL INPUTS

15 digital inputs, semiconductor relays, not short-circuit proof.

Operating voltage	20 V–30 V DC (SELV or PELV supply)
Input signal present (signal "1")	> 18 V DC (typical 4 mA for 24 V)
Input signal not present (signal "0")	< 5V DC
Pulse input (S0), maximum count frequency	25 Hz
Pulse input*1	in acc. with DIN EN 62053-31:1998 (IEC 62053-31:1998 class B)

Note about digital inputs:
**1 To operate the device in accordance with DIN EN 62053-31 (S0), a resistor with 1.3 kOhm/1 W must be connected parallel to the input.*

TEMPERATURE MEASUREMENT INPUT

1 input (3-wire measurement)

Update time	1 second
Connectable sensors	PT100, PT1000, KTY83, KTY84
Total burden (sensor + cable)	max. 4 kOhm

SENSOR TYPE	TEMPERATURE RANGE	RESISTOR RANGE	UNCERTAINTY IN MEASUREMENT
KTY83	–55 °C to +175 °C (–67 °F to 347 °F)	500 Ohm to 2.6 kOhm	±1.5 % rng
KTY84	–40 °C to +300 °C (–40 °F to 347 °F)	350 Ohm to 2.6 kOhm	±1.5 % rng
PT100	–99 °C to +500 °C (–146 °F to 932 °F)	60 Ohm to 180 Ohm	±1.5 % rng
PT1000	–99 °C to +500 °C (–146 °F to 932 °F)	600 Ohm to 1.8 kOhm	±1.5 % rng

CABLE LENGTH: DIGITAL INPUTS AND OUTPUTS, TEMPERATURE MEASUREMENT INPUT

Up to 30 m (32.81 yd)	Unshielded
More than 30 m (32.81 yd)	Shielded

TERMINAL CONNECTION CAPACITY: DIGITAL INPUTS AND OUTPUTS, TEMPERATURE MEASUREMENT INPUT

Single core, multi-core, fine-stranded	0.2–1.5 mm^2, AWG 24-16
Cable end sleeve (not insulated)	0.2–1.5 mm^2, AWG 24-16
Cable end sleeve (insulated)	0.2–1.5 mm^2, AWG 24-18
Tightening torque	0.2–0.25 Nm (1.77–2.21 lbf in)
Stripping length	7 mm (0.2756 in)

SERIAL INTERFACE

RS485 - Modbus RTU/Slave	9.6 kbps, 19.2 kbps, 38.4 kbps, 57.6 kbps, 115.2 kbps
Stripping length	7 mm (0.2756 in)

TERMINAL CONNECTION CAPACITY (SERIAL INTERFACE)

Single core, multi-core, fine-stranded	0.20–1.5 mm^2
Cable end sleeve (not insulated)	0.20–1.5 mm^2
Cable end sleeve (insulated)	0.20–1.5 mm^2, AWG 24-18
Tightening torque	0.20–0.25 Nm
Stripping length	7 mm (0.2756 in)

ETHERNET CONNECTION

Connection	RJ45
Functions	Modbus gateway
Protocols	TCP/IP, DHCP-Client (BootP), Modbus/TCP (Port 502), ICMP (Ping), NTP

CLOCK

Precision	±5 ppm in temperature range –40 °C to 70 °C (–40 °C to 158 °F) (corresponding to approx. 3 minutes p.a.)

SOFTWARE



GridVis®
Power Grid Monitoring Software

OPC FOUNDATION

Multiprotocol Server
OPC UA



Database Server
Complete server with GridVis®
and database



Device Homepage
Online energy management
and power quality analysis

Jasic®

Jasic®
Diverse
programing options

SOFTWARE



Software

302 GridVis® – Power grid monitoring software
322 Multiprotocol server – OPC UA
326 Database server – Complete server with GridVis® and database
332 Device homepage – Energy management & PQ analysis online
334 Jasic® – Versatile programming options

POWER GRID MONITORING SOFTWARE

ENERGY MANAGEMENT
Certified according to ISO 50001. With Janitza GridVis®, you are in safe hands when it comes to such issues as BAFA and reducing the EEG levy.

VISUALIZATION & DOCUMENTATION
Visualization according to your needs. Quickly and easily create dashboards without programming knowledge and use the report editor for custom-designed reports.

CONNECTIVITY
Whether it's OPC UA, REST API or CSV. We offer many options for data import & export as well as data access. An open and future-proof system.

SAFETY & ALARM MANAGEMENT
Monitor limit values of measured variables, consumption data, residual currents and device communication. Escalation levels for needs-based alerting via email and web interface.

NETWORK ANALYSIS & EVALUATION
Analyze and evaluate measurement data. Use numerous tools such as statistics, charts, heatmaps, Sankey diagrams and key performance indicators.

AUTOMATION
Automation functions for time-controlled task management. Plan data imports, report generation or device readouts and create shift schedules.

GridVis®



GridVis® ESSENTIALS	GridVis® STANDARD	GridVis® EXPERT	GridVis® CLOUD
For beginners	Comprehensive functions	Full-range	Energy monitoring portal

THREE APPLICATIONS – ONE SOFTWARE PROGRAM
ENERGY MANAGEMENT – POWER QUALITY – RESIDUAL CURRENT MONITORING

Implement the three application areas of energy management, power quality and residual current monitoring with the scalable GridVis® power grid monitoring software. GridVis® identifies potential energy savings and helps to optimize the utilization of operating equipment as well as detect production failures at an early stage. Numerous functions support the fulfillment of standards, the preparation of key figures and the analysis of measured values. This makes the scalable, user-friendly software perfectly suited for developing standards-compliant energy, residual current and power quality monitoring systems, and it has been classified by the BAFA as energy management software that is funding eligible. Depending on your specific needs, there are three editions with different range of functions available.



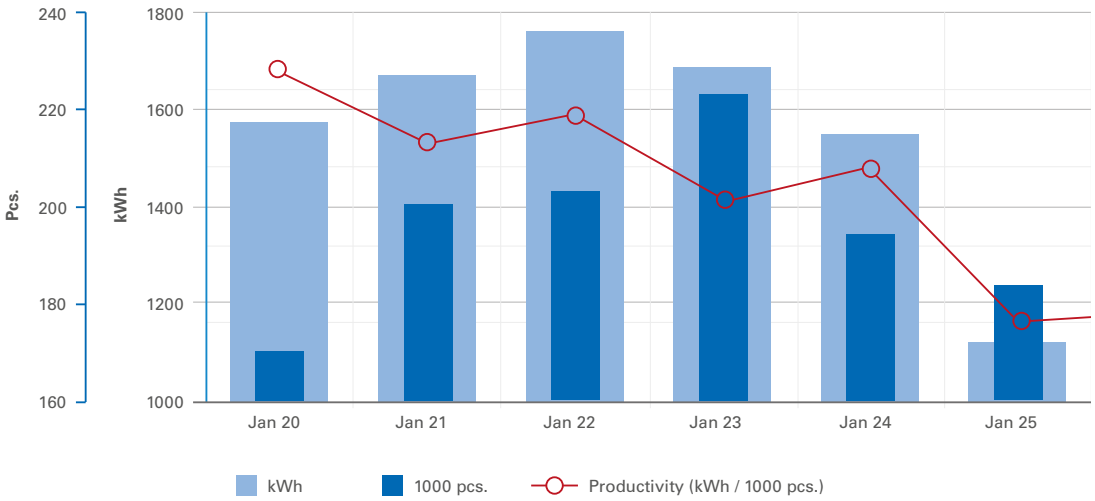
240
220
200
180
160
Pcs.
1800
1600
1400
1200
1000
kWh
Jan 20
Jan 21
Jan 22
Jan 23
Jan 24
Jan 25
kWh
1000 pcs.
Productivity (kWh / 1000 pcs.)


Load curve analysis 2020
Production line 1
Production line 2
Production line 3

GridVis® EDITIONS OVERVIEW

THE IDEAL RANGE OF FUNCTIONS FOR EVERY REQUIREMENT

There are several editions of GridVis® to cover a range of requirements. The GridVis® Essentials edition is a free entry-level version, offering all of the basic functions for setting up and configuring your measurement device. The GridVis® Standard edition offers everything you need for ISO 50001 certified energy management, plus lots of other functions to make life easier.

The GridVis® Expert includes the complete range of functions of our power grid monitoring software. The GridVis® Cloud gives you access to a stand-alone energy monitoring portal for analyzing your energy consumption costs. A detailed overview of the functions and differences can be found in the following table.

	GridVis® ESSENTIALS	GridVis® STANDARD	GridVis® EXPERT	GridVis® CLOUD
SYSTEM FUNCTIONS				
Device configuration	•	•	•	–
Server-based service	–	•	•	–
Software as a Service (SaaS)	–	–	–	•
HTTPS encryption	–	•	•	•
User management	–	•	•	•
Alarm management	–	–	•	–
Monitoring of device communication	–	•	•	•
Database (MySQL, MSSQL)	–	•	•	–
Key performance indicators	–	–	•	–
Automation	–	•	•	–
Sending e-mails	–	–	•	•
Software-based measured value recording	–	•	•	•
VISUALIZATION				
Customized dashboards	–	•	•	–
Static dashboards	–	–	–	•
Sankey diagram	–	–	•	–
Hierarchy management	–	•	•	•
Customized list function	–	•	•	–
Energy and measured value analysis	•	•	•	–
Event/transient analysis	•	•	•	–
REPORTS AND EXPORTS				
Basic package	•	•	•	–
RCM (residual current monitoring)	•	•	•	–
Power quality	•	•	•	–
Energy monitoring	–	•	•	•
Energy management	–	•	•	–
Customized reports	–	–	•	–
CONNECTIVITY				
Data import (CSV & MSCONS)	–	•	•	–
Data export (MSCONS)	–	–	•	–
REST API	–	•	•	–
OPC UA Client	–	–	•	–
Third-party Modbus devices	–	–	•	•

For the latest version of the editions overview, please take a look at our website https://www.janitza.com/en/products/gridvis/editions

The fee-based Standard, Expert and Cloud editions can be ordered using the following item no.s

Designation	GridVis® STANDARD	GridVis® EXPERT	GridVis® CLOUD
BASIC PACKAGES			
Quantity of items	**Item no.:**	**Item no.:**	**Item no.:**
5 items	5100600	5100700	5100801
10 items	5100601	5100701	5100802
25 items	5100602	5100702	5100803
50 items	5100603	5100703	5100804
100 items	5100604	5100704	5100805
150 items	5100604	5100712	–
> 150 items	On request	On request	On request
ADD ITEMS			
Quantity of items	**Item no.:**	**Item no.:**	**Item no.:**
5 more items	5100620	5100720	5100801
10 more items	5100621	5100721	5100802
25 more items	5100622	5100722	5100803
50 more items	5100623	5100723	5100804
EXTEND UPDATE/ACTIVATION PERIOD*			
Quantity of items	**Item no.:**	**Item no.:**	**Item no.:**
5 items for 1 year	5100640	5100740	5100821
10 items for 1 year	5100641	5100741	5100822
25 items for 1 year	5100642	5100742	5100823
50 items for 1 year	5100643	5100743	5100824
100 items for 1 year	5100644	5100744	5100825
150 items for 1 year	5100652	5100752	–
> 150 items for 1 year	On request	On request	On request
5 items for 3 years	5100660	5100760	–
10 items for 3 years	5100661	5100761	–
25 items for 3 years	5100662	5100762	–
50 items for 3 years	5100663	5100763	–
100 items for 3 years	5100664	5100764	–
150 items for 3 years	5100672	5100772	–
> 150 items for 3 years	On request	On request	On request

UPGRADE TO THE EXPERT EDITION

Quantity of items	Item no.:
10 items	5100681
25 items	5100682
50 items	5100683
100 items	5100684
150 items	5100692
> 150 items	On request

**The update period will be charged against the existing license update/activation period and the total number of items, and credited to the license.*

GridVis® SERVICES

Benefit from individual in-house training and a wide range of training opportunities in our training center in Wetzlar. Professional advisory and support services are free of charge for GridVis® customers. We assist with on-site commissioning and offer fair maintenance contracts to optimally ensure your system availability. Option of customer-specific adjustments to reports.

Rely on a partner with an extensive product portfolio and years of experience. With the cross-industry expertise of our experienced contacts, let us support you in integrating a perfect solution into your company.

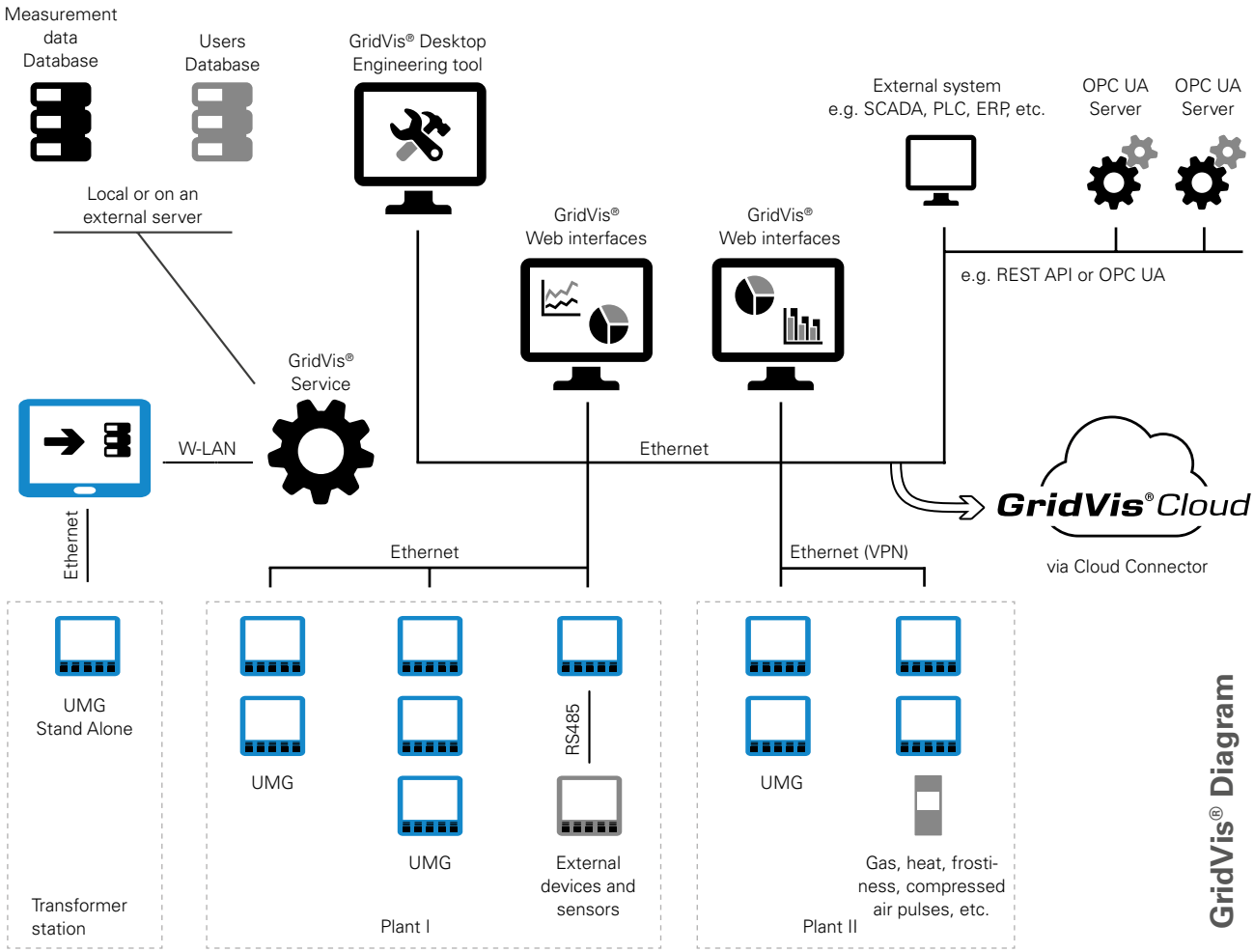

GridVis® ESSENTIALS

FREE ENTRY-LEVEL MODEL

GridVis® Essentials offers basic functions for the configuration of Janitza energy measurement devices as well as a graph function for the visualization of current and historical measured values. In addition, a tool for evaluating events and transients is included. Simple standard reports, such as the EN 50160 evaluation or CSV/XLS data exports for measured and energy values, as well as reports for residual current measurement (RCM) are provided.



Fig.: GridVis® Device configuration

SYSTEM FUNCTIONS

- Configure your measurement devices using numerous settings and parameterization options.

VISUALIZATION

- Events and transients can be analyzed easily and in detail using graphs, the CBEMA curve and statistics.
- Overview of all measurement devices, and display of individual device details

DOCUMENTATION

- CSV exports of energy and measured values, as well as various reports (commissioning report, energy report and EN 50160 report).
- The RCM report allows clear and uncomplicated display of measurement data from residual current measurements.

GridVis® STANDARD

COMPREHENSIVE RANGE OF FUNCTIONS

In addition to the basic functions of the Essentials edition, GridVis® Standard has several options for visualizing data and it is suitable for implementing an energy management system certified according to ISO 50001. Extensive system functions facilitate measurement data management, creating a quick overview and simplify processes. Data exports in the form of various reports facilitate evaluation. The data import function enables the import of external data such as turnover or quantities into GridVis®.

SYSTEM FUNCTIONS

- Use logic links and operations to create, for example, cost centers or virtual measurement points.
- Manage users and their rights and roles.
- Automation of functions such as data readout and tariff management, notifications in case of faulty device communication.
- Configure your measurement devices using numerous settings and parameterization options.
- Use database actions such as compacting and deleting data or backups via MSSQL/MySQL drivers.
- Recording of measurement data, for example for third-party devices, devices without memory or devices with an OPC UA connection.



Fig.: GridVis® Device configuration



Fig.: GridVis® Event & transient browser

VISUALIZATION

- Build custom dashboards and visualize measured values with numerous visualization objects.
- Overview of all measurement devices as well as a search and filter function.
- Events and transients can be analyzed easily and in detail using graphs, the CBEMA curve and statistics.



Fig.: GridVis® Event & transient browser

DOCUMENTATION

- CSV exports and various reports, such as the commissioning report or the energy report.
- Various data exports – such as the high availability report, the LET report, the EN 50160 annual evaluation or the NeQual data export – can be used to assess the power quality.
- RCM report for clear presentation of the measurement data. For energy management, the utilization report and the energy bill are available.

CONNECTIVITY

- Data imports from CSV or MSCONS files.
- REST API interface for developers and application engineers.

GridVis® EXPERT

FULL-RANGE

GridVis® Expert provides the full range of GridVis® functions. This includes additional visualization options, system functions and optimal adaptation to your needs. You can create key performance indicators as well as quantity flow diagrams and combine them clearly. With the OPC UA Client, your data can be imported securely and easily. Additionally, third-party devices can be integrated via Modbus/TCP or Modbus/RTU. Furthermore, other protocols and interfaces are also supported by the software. This means GridVis® Expert enables optimal processing of your data.



SYSTEM FUNCTIONS

- Connection to a central Windows user management using LDAP protocol is possible.
- Monitoring of data and communication as well as alerting via different channels; logbook and escalation levels are included.
- Logical links and operations to create cost centers or virtual measurement points, for example.
- Automation of functions such as data readout and tariff management, notifications in case of faulty device communication.
- Use database actions such as compacting and deleting data or backups via MSSQL/ MySQL drivers.
- Manage users and their rights and roles.
- Configure your measurement devices using numerous settings and parameterization options.
- Recording of measurement data, for example for third-party devices, devices without memory or devices with an OPC UA connection.



Fig.: GridVis® Report Editor

GridVis® EXPERT

VISUALIZATION

- Creation of flow rate diagrams. Visual representation of energy consumption based on historical values and live values.
- Advanced visualization objects for dashboards, e.g. CO_2 emissions, regression analysis and heatmaps.
- Creation and evaluation of key performance indicators (KPI). Recognize changes and improvements in the energetic baseline (EnB).
- Overview of all measurement devices as well as a search and filter function.
- Events and transients can be analyzed easily and in detail using graphs, the CBEMA curve and statistics.

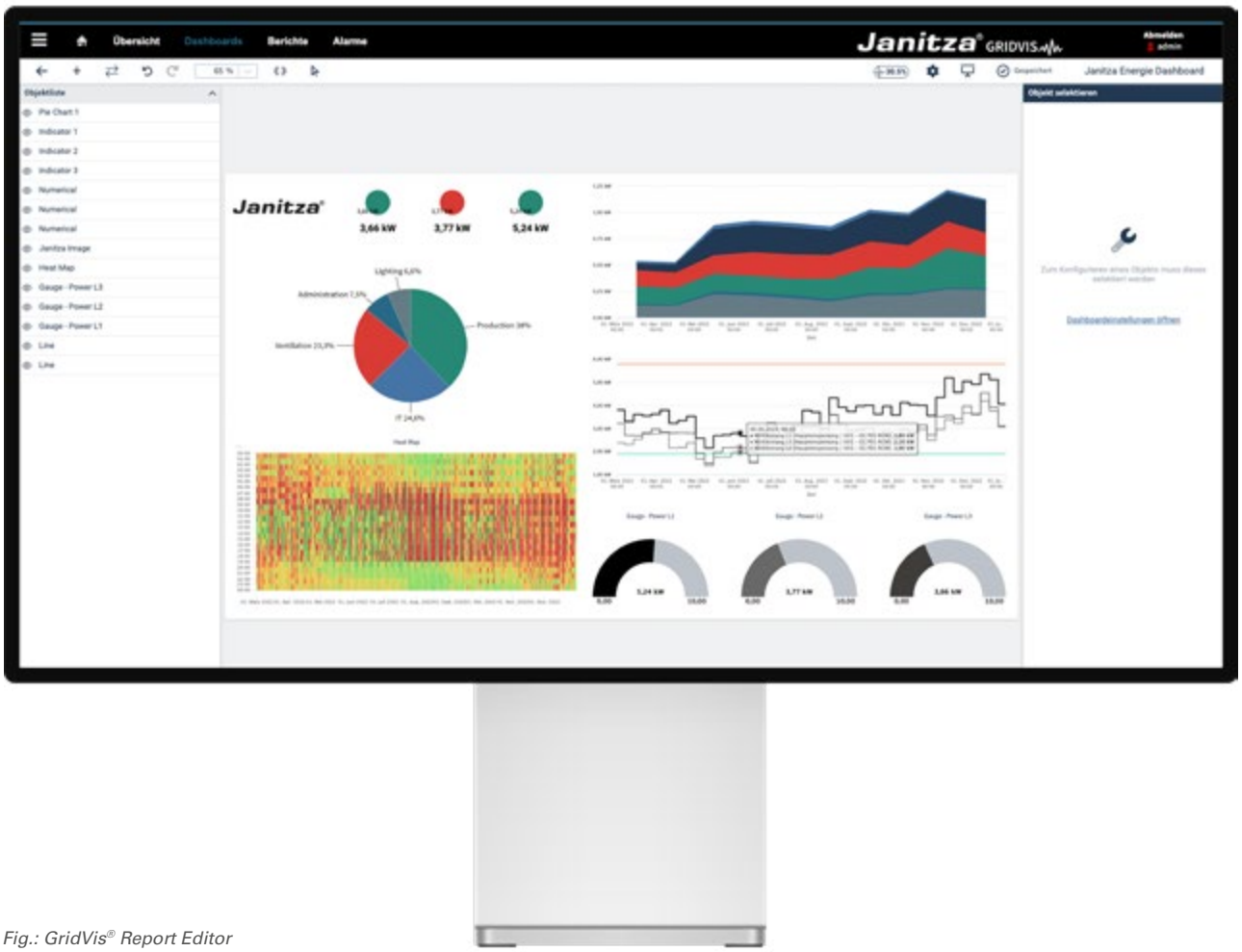

Fig.: GridVis® Report Editor

DOCUMENTATION

- Create reports based your own preferences, archive them within the software and download them as PDFs
- CSV exports and various reports, such as the commissioning report or the energy report.
- Evaluation of the power quality, for example, via the high availability report or the NeQual data export
- RCM report for clear presentation of the measurement data.
  For energy management, the utilization report and the energy bill are available.

CONNECTIVITY

- Integrate third-party devices via Modbus/TCP or Modbus/RTU (RS485).
- Integration of OPC UA servers to access additional data.
- Events and transients can be stored in the Comtrade format, consumption data in the MSCONS format.
- Data imports from CSV or MSCONS files.
- Interface for developers and application engineers.



Fig.: GridVis® Measured value analysis

GridVis® Cloud

QUICK AND EASY EVALUATION

No matter whether verifications need to be provided, electricity savings are required or the CO_2 balance needs to be calculated, the GridVis® Cloud helps to accomplish these tasks. As a software service, it offers an energy monitoring tool that can be integrated into your daily work routine with very little effort. It provides convenient, standardized dashboards for a quick overview. Information such as rate agreements and emissions can be integrated for subsequent automatic evaluation. The load profile also gives you a direct overview of the composition of the energy that you generate and consume. The GridVis® Cloud is particularly user-friendly for those who need a simple consumption overview.

SYSTEM FUNCTIONS

- Access via standard browser on a PC or laptop with no VPN needed. Optimum display even on a tablet
- In addition to generated and consumed electricity, the GridVis® Cloud supports the recording and display of gas, (hot) water, heat and compressed air.
- Cloud storage for integrated measurement devices
- Automatic updates of the Cloud functions at no extra cost

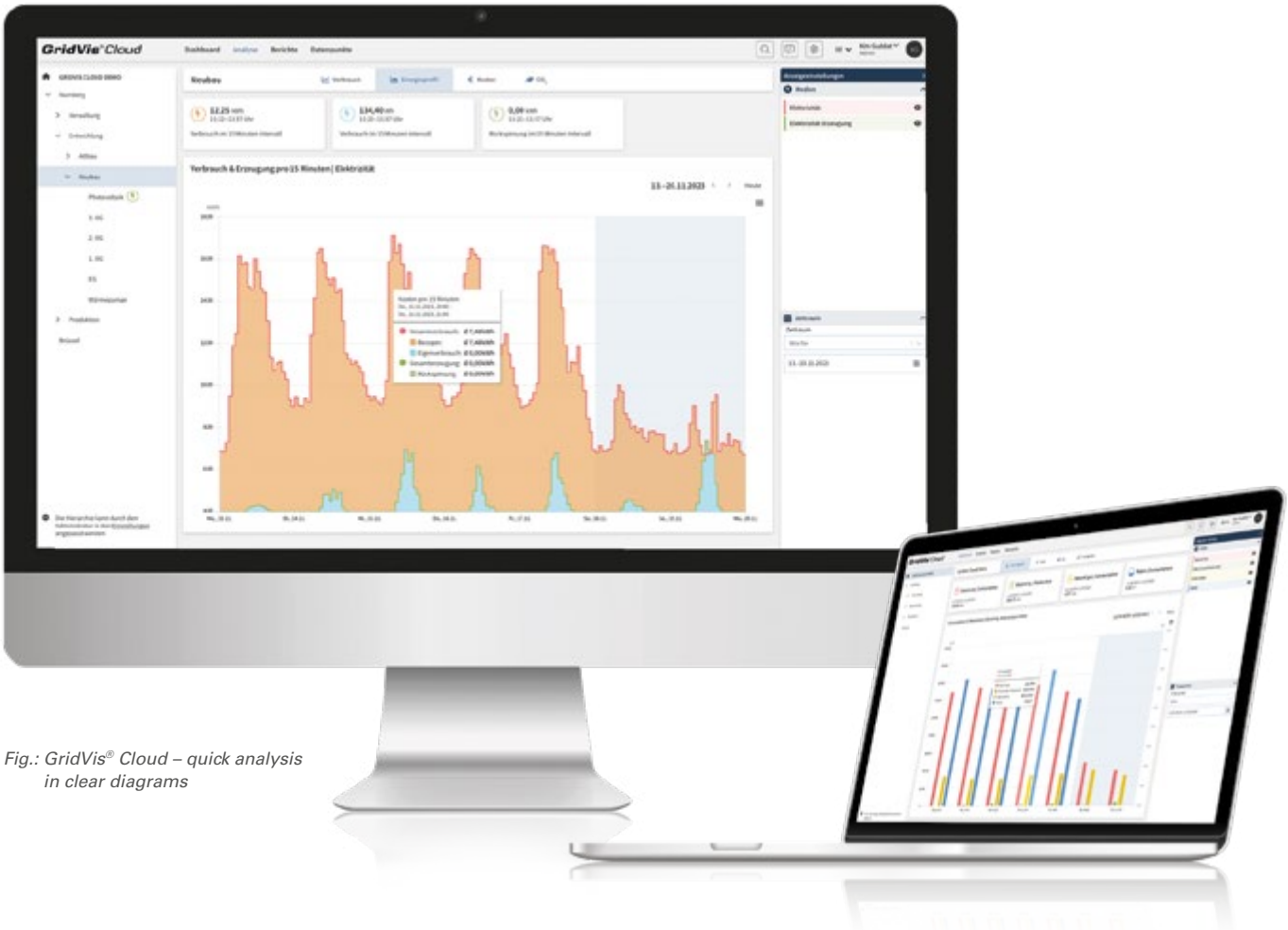

Fig.: GridVis® Cloud – quick analysis in clear diagrams

VISUALIZATION

- Predefined dashboards and media-related display as well as filter display to one measurement point
- Device overview with a search and filter function
- Hierarchical display of measuring points with automated consumption calculation
- Evaluation option for consumed, self-generated and recovered electrical energy
- Display graphs over various comparison periods and an aggregation function for easy evaluation

CONNECTIVITY

- Transfer measurement data automatically to the cloud with the Cloud Connector
- Intuitive management of offline measurement devices with manual data input
- Drag & drop arrangement of the connected measurement devices in the structure
- Data export in CSV/XLSX format

DOCUMENTATION

- Automatic conversion to a uniform, comparable consumption basis (if possible)
- Master data (including history) for energy prices & CO_2 emissions
- Show history of costs incurred and CO_2emissions
- Easily create automatically generated reports for consumption, costs and CO_2 emissions



Fig.: GridVis® Cloud – Predefined reports can be accessed from anywhere

ENERGY MONITORING PORTAL

SECURE DATA TRANSFER IN THE CLOUD

The Cloud Connector serves as an interface between the GridVis® Cloud and the measurement devices. The Cloud Connector automatically collects the measurement data in the local network, cyclically encrypts it and transfers it to the GridVis® Cloud. Disturbances in the connection are largely compensated for by the memory-based query and transmission mechanism of the Cloud Connector. The data can be accessed online at any time and from anywhere via the web-based energy monitoring portal using your personal login credentials. The storage of measurement data in European data centers is included in the licensing of the GridVis® Cloud, as is the permanent operation of the cloud environment without needing additional IT resources.

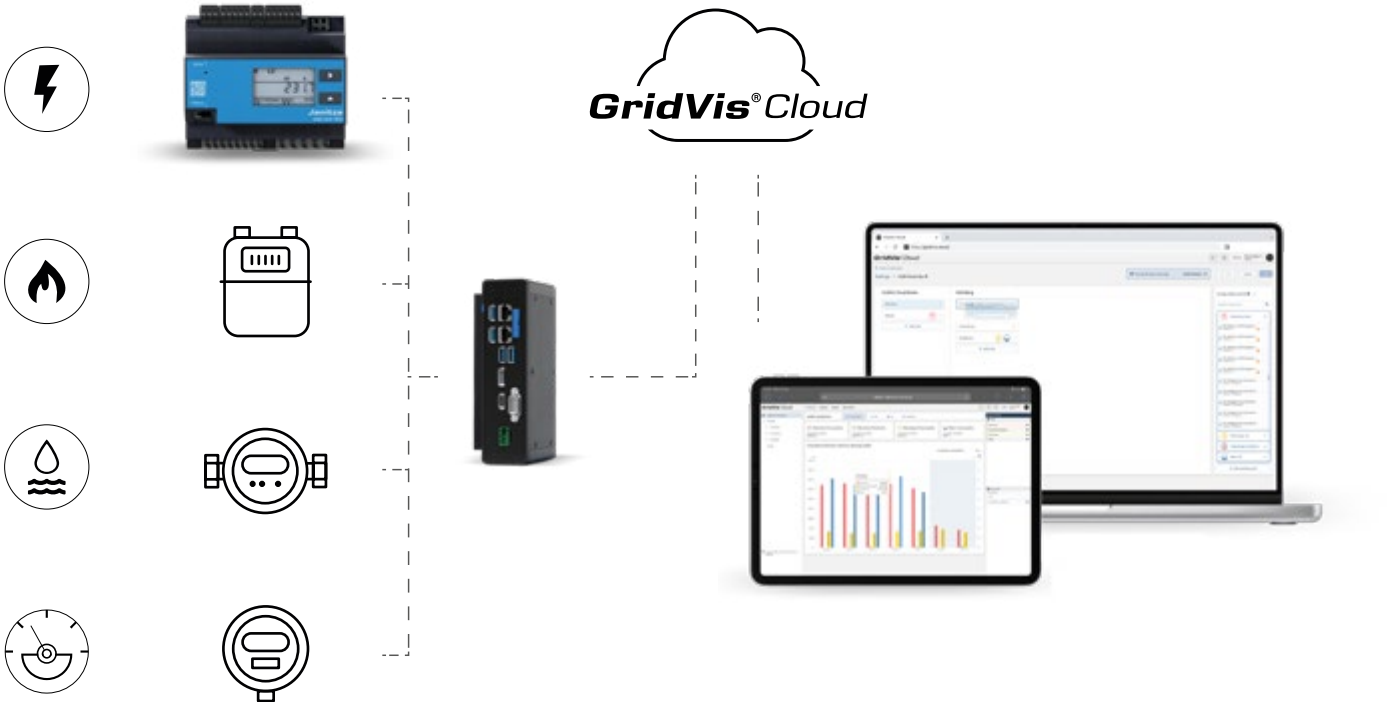

Fig.: GridVis® Cloud system architecture

CLOUD CONNECTOR

THE CLOUD CONNECTOR AT A GLANCE

- Connects the measurement equipment with the GridVis® Cloud
- Automatic detection of most Janitza measurement devices
- Integration of third-party devices using Modbus/TCP or with a converter (1506107) directly through Modbus/RTU
- DIN rail mounting or stand-alone
- Integrated local web frontend for configuration and status display
- Connection via Ethernet, encrypted data transfer to the Cloud

CLOUD CONNECTOR M, ITEM NO.: 5100420
DIN rail mounted device / stand-alone
Up to 100 measurement devices
All measurement device types
Ethernet
Integrated local web frontend

THE GridVis® CLOUD STARTER PACK, ITEM NO.: 5100460
Cloud Connector M and GridVis® Cloud software license
The software license covers 10 items for a one-year period of use
Advantages: – It's easy to get started with a single package. – This is a quick introduction to energy monitoring. – Everything you need is in just one package.



Fig.: GridVis® Cloud Starter Pack with Cloud Connector M

ONLY TWO STEPS TO GET YOUR OWN GridVis®

1. SELECT A GridVis® EDITION

GridVis® ESSENTIALS	GridVis® STANDARD	GridVis® EXPERT	GridVis® CLOUD

There is no limit on the number of items with Essentials, so the following step can be omitted.

2. SELECT THE BASIC PACKAGE

Depending on the size of the project, different basic packages can be selected. The package size is specified in items. The Standard and Expert editions include a one-year update time period including current releases. After this update time period expires, updates are no longer possible. The basic package of Edition Cloud includes a usage period of 12 months. After the period of use has expired, access will be blocked and must be reactivated or extended by renewing the license.

5 Items*	10 Items	25 Items	50 Items	100 Items	>100 Items

* Only 5 items are available for GridVis® Cloud

What are Items?
Items are used to describe the size of a project. The larger the project, the more items needed. Items are:

Mesurement devices (Virtual devices no items)	**Users** (created users)	**Data Import**[1] (OPC, CSV, MSCONS groups)



An item corresponds to a measurement device, a created user or a data import. Modbus devices from third party suppliers also count as items. You can add more items at any time. An item enhancement enables you to cost-effectively increase your project size.

[1] a data import or third-party Modbus device can be integrated with up to 50 configured variables

OPTIONS, UPGRADES AND EXPANSIONS

Update time period / Extend usage period (available for Standard & Expert / Cloud):
You can purchase an extension of your update time period (Standard & Expert) or your usage period (Cloud) for 1 or 3 years at any time. Here, too, you can choose from various package sizes. The purchased packages are then charged and credited based on your existing items and the previous expiry date. Not a day goes missing!

1 year	3 years

Upgrade to GridVis® Expert (available for Standard):
With the upgrade, the range of functions of GridVis® Standard can be increased to the range of functions of GridVis® Expert. You can upgrade at any time, and the upgrade period is automatically extended by 12 months.

Please note that the upgrade also depends on the number of items. This must be greater than or equal to the currently used number of items.

Item Extension (available for Standard, Expert and Cloud):
The basic packages can be flexibly expanded with additional items.

5 Items*	10 Items	25 Items	50 Items

* Only 5 items are available for GridVis® Cloud

Item Calculation Using the Example of a GridVis® Standard

GridVis®

Measurement devices	50
Modules	10
GridVis® Users	2
Data import One data import can contain up to 50 variables or measured values per group	1
Total items	63
Item packages required	**50 + 25 = 75**
Items still available	12

INCREASE CONNECTIVITY

Extend the connectivity of GridVis® with the multi-protocol server (MPS) from NETxAutomation and use the option of providing measurement data at OPC UA level. The multi-protocol server from NETxAutomation, with an integrated GridVis® driver, is available exclusively from Janitza and can be used in addition to the OPC UA Client.

The server enables direct access to measurement data and key performance indicators of GridVis®. Clear advantages of the integrated driver include the little setup effort required and the high availability of all measurement data. In addition, the complete GridVis® meter structure is available directly in the OPC UA tree. The mounting of several GridVis® projects is also supported. OPC UA clients, including the GridVis® OPC UA Client, building management systems, SCADA systems, ERP systems and many more can thus easily process online data from GridVis®. In addition to the direct GridVis® connection, the multiprotocol server offers KNX, BACnet, Modbus, SNMP, OPC, MQTT as well as logic functions that are already included in the scope. Our partner, NETxAutomation, provides support with their many years of experience in OPC UA and building automation. The Janitza specialists are well-trained to support you in the installation and commissioning of the server upon request.

Multiprotocol Server



OPC UA

INTEGRATION

Low setup effort
and high availability

COMMUNICATION

Process data system-
independently

COST SAVINGS

Low setup effort
due to integrated GridVis® driver

TECHNICAL DATA

MULTIPROTOCOL SERVER		
TYPE	**DESCRIPTION**	**ITEM NO.**
Multi Protocol Server 1000	– Server including GridVis® driver – Compatible with GridVis® Standard and Expert* editions – For a direct GridVis® service connection – 1000 data points included – Including SNMP, BACnet, OPC UA clients – Licensing softkey	**5100155**
Multi Protocol Server 2500	– Server including GridVis® driver – Compatible with GridVis® Standard and Expert* editions – For a direct GridVis® service connection – 2500 data points included – Including SNMP, BACnet, OPC UA clients – Licensing softkey	**5100156**
Multi Protocol Server 5000	– Server including GridVis® driver – Compatible with GridVis® Standard and Expert* editions – For a direct GridVis® service connection – 5000 data points included – Including SNMP, BACnet, OPC UA clients – Licensing softkey	**5100157**
Multi Protocol Server 10000	– Server including GridVis® driver – Compatible with GridVis® Standard and Expert* editions – For a direct GridVis® service connection – 10,000 data points included – Including SNMP, BACnet, OPC UA clients – Licensing softkey	**5100158**

** The Multi Protocol Server is also compatible with the GridVis® Service and Ultimate editions.*

Note: The multiprotocol server is a stand-alone application and can be purchased in addition to GridVis®. Billing is based on required data points. We will be delighted to provide you with a customized offer.



COMPLETE SERVER WITH GridVis® AND DATABASE

DATABASE SERVER

- Trouble-free, immediate use
- Simple and fast integration of the configured server into the existing network
- The GridVis® software is already installed on the database server
- Available databases: Janitza DB, MS SQL or MySQL
- Dell PowerEdge server
- Data security through RAID-10 systems with HotPlug hard disks

GUARANTEED ALL-ROUND SERVICE

- Access to database servers thanks to Janitza maintenance diagnostics and troubleshooting after approval
- Quickly diagnose and fix problems
- Highest safety: Use of common remote maintenance solutions with three-level industry-standard encryption

APPLICATIONS

- GridVis® runs as a service on the server
- User login not required
- For measured value analysis, the client computers access the server directly via the network
- Access to measurement data within the database by any number of client systems possible
- Visualization of historical data via the database, online measured values available directly from the device

Database Server



INTEGRATION

Simply integrate, use immediately

SAFETY

High data security with maximum performance

EXPANDABLE

Quickly and easily expand and scale

DATABASE SERVER

Extensive measured value analysis requires powerful server solutions

- Janitza electronics GmbH offers a powerful server as a complete solution
- Trouble-free, immediate use is ensured
- Simple and fast integration of the configured server into the existing network
- The GridVis® software is already installed on the database server
- Available databases: Janitza DB, MS SQL or MySQL
- Use of a powerful tower or rack server from Dell
- The Dell PowerEdge server offers high quality and reliability with maximum expandability
- The use of RAID 10 systems with HotPlug hard disks ensures maximum data security



Fig.: Server (tower)



Fig.: Server (rack)

Guaranteed all-round service

- Access to database servers thanks to Janitza maintenance diagnostics and troubleshooting (only with approval)
- Fast diagnosis and elimination of problems is possible
- Highest safety: Use of common remote maintenance solutions with three-level industry-standard encryption

For larger projects, we currently recommend the following configuration:

- Current Intel processor
- 16 GB RAM
- RAID controller
- RAID 10 with 4 hard disks of 1 TB capacity each
- DVD ROM drive
- Windows 2019 server with 5 CALs, 64-bit (German or English version)
- Installation of the GridVis® software and the database driver for SQL servers
- Databases MySQL / MS SQL are to be provided
- The integration of the server into the company's own network must be carried out via the customer's in-house administration

Offers on request

Areas of application

- For extensive monitoring systems with a large number of measurement devices
- For applications that require high data security and maximum performance
- For companies whose systems are to be scalable and expandable

Application

- GridVis® runs as a service on the server
- User login not required
- For measured value analysis, the client computers access the server directly via the network
- Access to measurement data within the database by any number of client systems possible
- Display of online measured values depends on the number of ports per device, i.e. visualization of historical data via the database, online measured values available directly from the device

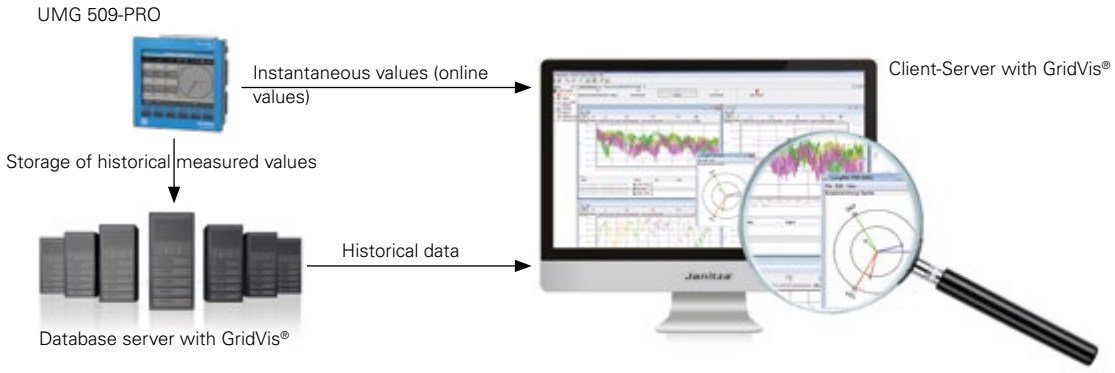

Fig.: The UMG 509-PRO, for example, currently has 6 communication ports. Two of them are designed as a gateway (port 8000) for downstream RS-485 devices.

TECHNICAL DATA

DATABASE SERVER		
TYPE	**DESCRIPTION**	**ITEM NO.**
Server (tower)	– Current Intel processor – 16 GB RAM – RAID controller – RAID 10 with 4 hard disks of 1 TB capacity each – DVD ROM drive – Incl. mouse and keyboard with German layout – Windows 2019 server with 5 CALs, 64-bit (German or English version) Note: – GridVis® software and database driver for SQL server – The MySQL / MS SQL databases are to be provided by the customer – The integration of the server into the company's own network must be carried out via the customer's in-house administration – Warranty from Dell GmbH	**1506352** (German Windows version) **1506353** (English Windows version)
Server (rack)	– Current Intel processor – 16 GB RAM – RAID controller – RAID 10 with 4 hard disks of 1 TB capacity each – DVD ROM drive – Windows 2019 server with 5 CALs, 64-bit (German or English version) Note: – GridVis® software and database driver for SQL server – The MySQL / MS SQL databases are to be provided by the customer – The integration of the server into the company's own network must be carried out via the customer's in-house administration – Warranty from Dell GmbH	**1506354** (German Windows version) **1506355** (English Windows version)
Setup package 3 for JanDB	– Install hard disks – Install operating system – RAID configuration (RAID 10) – Install updates – Set up JanDB – Install GridVis® – Set up RTP User	**5101023**

** The MS SQL or MySQL database is to be provided by the customer. GridVis® software and database drivers are separate items. The integration of the server into the company's own network must be carried out via the customer's in-house administration. Hardware warranty from Dell GmbH.*

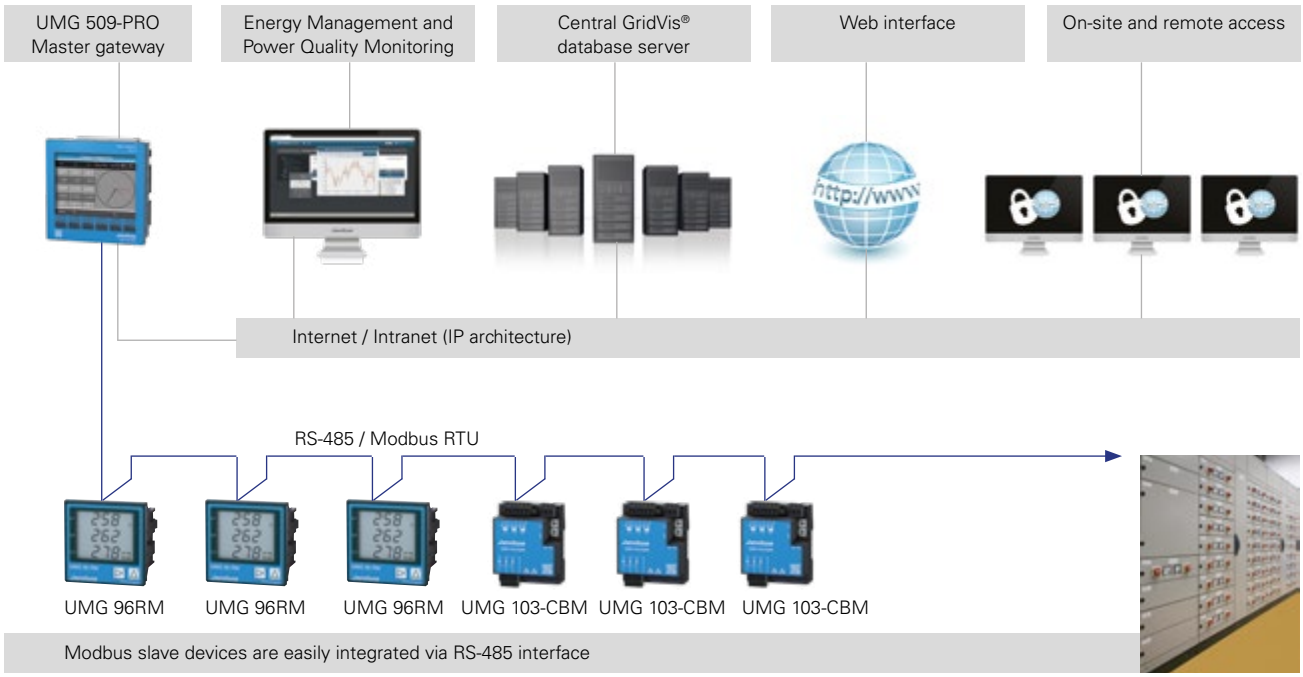

Fig.: Master-slave communication architecture

ENERGY MANAGEMENT AND PQ ANALYSIS ONLINE

For users who do not need or do not want to install the GridVis® software, the measurement device's own homepage can be used. All that is required for access is a standard web browser and an Ethernet connection. Each measurement device has an integrated web server that provides a password-protected homepage. The device can be operated just as comprehensively via its homepage as via the device display. Online and historical measurement data (energy consumption by default) as well as power quality analysis can be retrieved. The display can be used to remotely control and configure the measurement device. Since a large number of PQ measured values can be displayed in addition to standard electrical values, for many users, the device homepage represents a basic configuration for a monitoring system.

- Access to the powerful device homepage via web browser
- No software installation necessary
- Online data, historical data and much more can be called up directly via the device homepage
- Functional enhancement through APPs possible
- Remote control of the device display via the homepage
- Password protection possible

Device Homepage

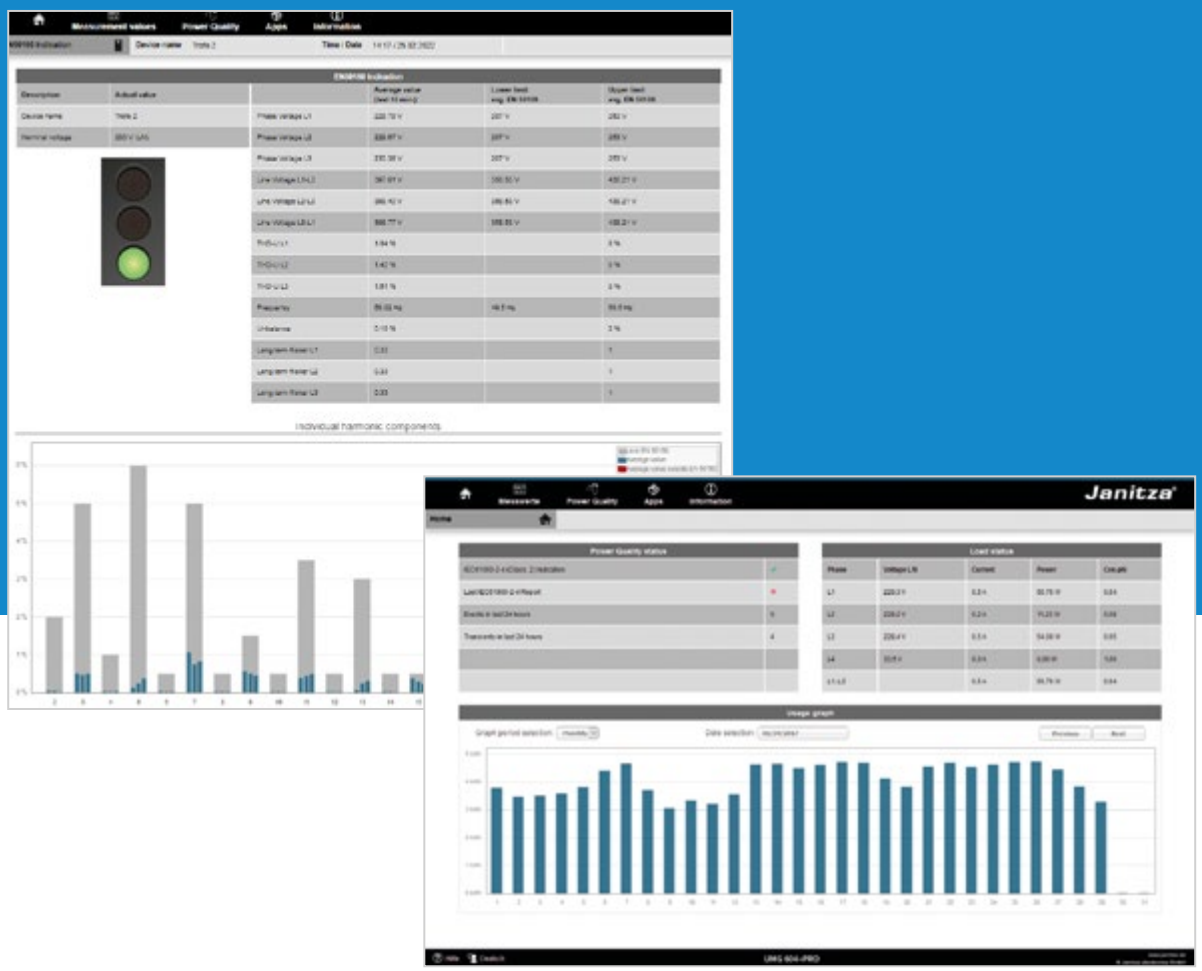

AVAILABILITY

Quick retrieval of important measurement data with no program installation

VISUALIZATION

Conveniently visualize and analyze data

INTEGRATION

No installation necessary

PROGRAMMING LANGUAGE

- Special programming/script language for the meters UMG 604-PRO / UMG 605-PRO / UMG 509-PRO and UMG 512-PRO
- Enhance the functionality of the meter with your own tasks
- User-friendly, graphical programming for the creation and configuration of mathematical functions and logical operations
- Device's own digital outputs can be set and inputs can be evaluated effortlessly
- Process and describe registers of external devices via Modbus (license required)
- Freely configure limit violations, time switching functions or recording of special values
- Store created programs as a file or transmit them to the measurement device
- 7 memory locations with 128 kByte each
- Simultaneous running of the 7 programs
- The user can freely program the Jasic® source code

JASIC®

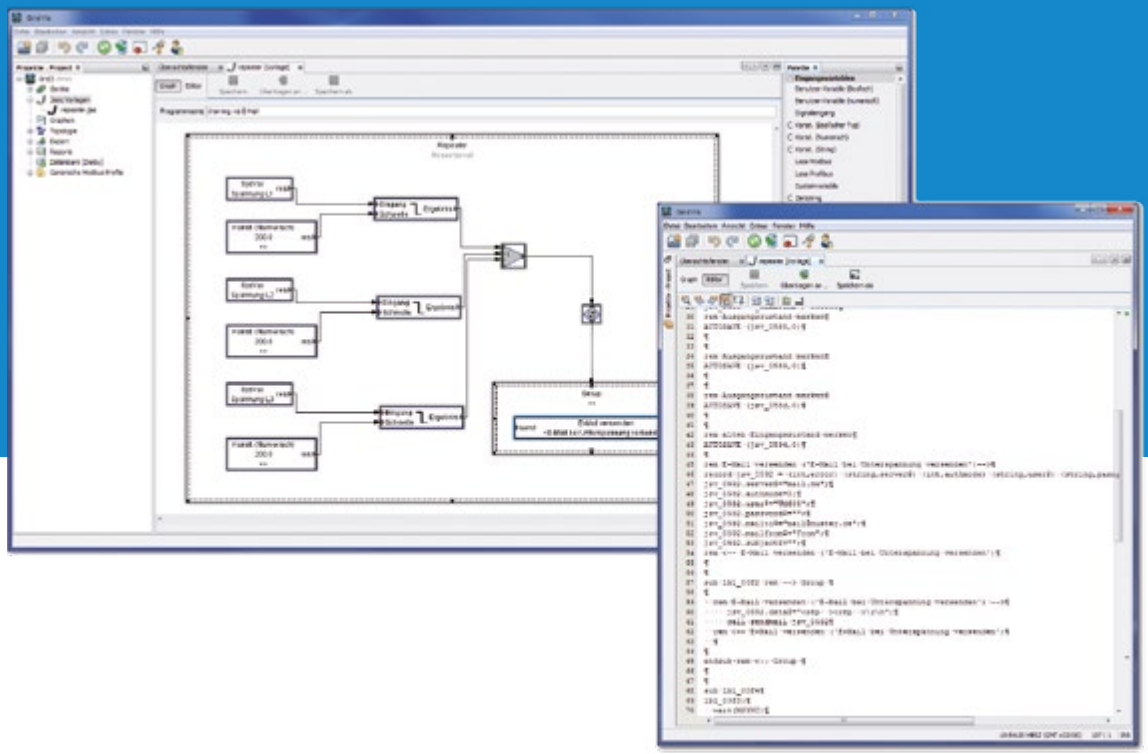

EXPANDABLE

Enhance devices with individual functions

SOLUTION-ORIENTED

Graphical, user-friendly programming

FLEXIBILITY

High flexibility due to extensive program functions

JASIC® PROGRAMMING LANGUAGE

Wide range of programming options

- User-friendly, graphical programming
- Custom enhancement of functions in the device
- Mathematical functions & logical operations
- Freely program the Jasic® source code
- Freely configure limit violations, time switching functions or recording of special values
- Set device's own digital outputs
- Evaluate digital inputs effortlessly

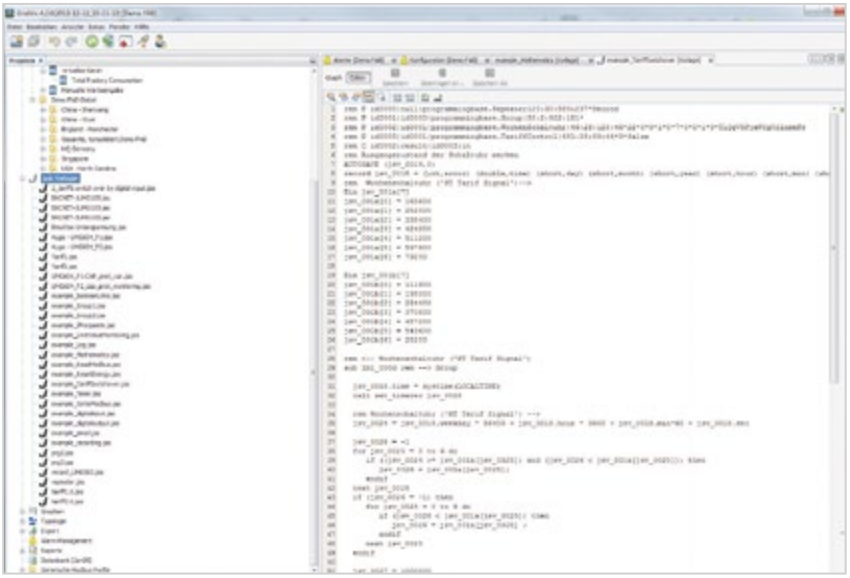



Graphical programming: Examples of limit value monitoring (comparator)

Example 1

- Monitoring of current L1: Definition of the threshold values by means of constants
- Digital output 1 indicates the exceeding of the predefined values

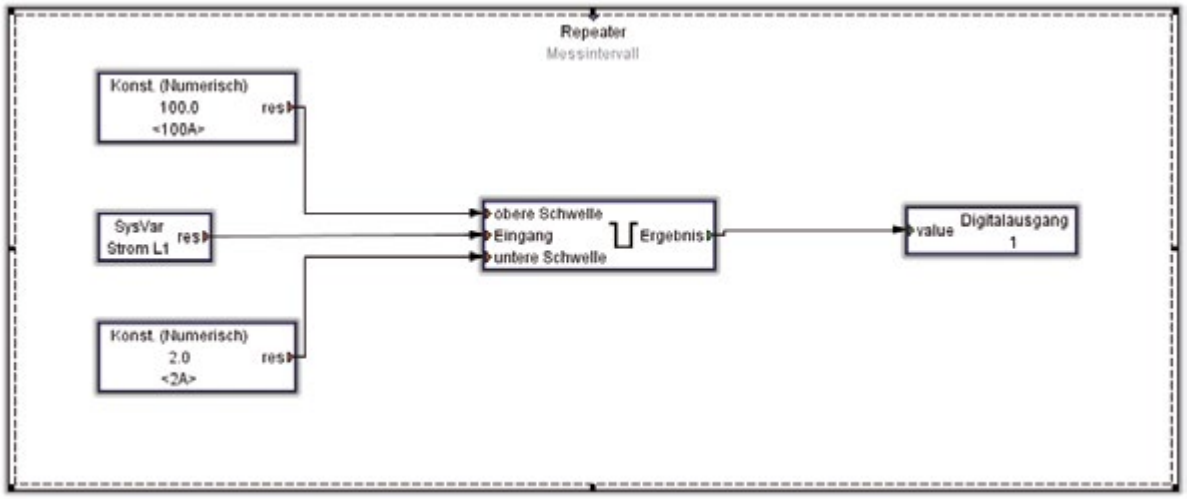

Example 2

- Operates with only one lower limit (in this case 100 A)
- When the current falls below 100 A, digital output 2 is activated

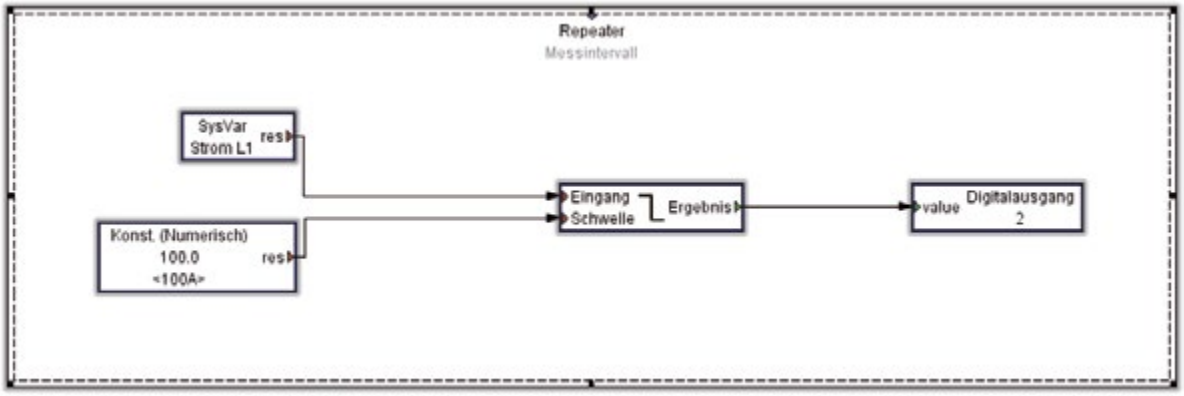

Graphical programming: Examples of limit value monitoring (comparator)

Example 3

- An email is sent when the predefined settings are exceeded
- In this example, the dispatch takes place with an undervoltage of < 200 V in phases L1, L2 or L3
- Additional Information: Voltage values from the 3 phases at the time of the undervoltage

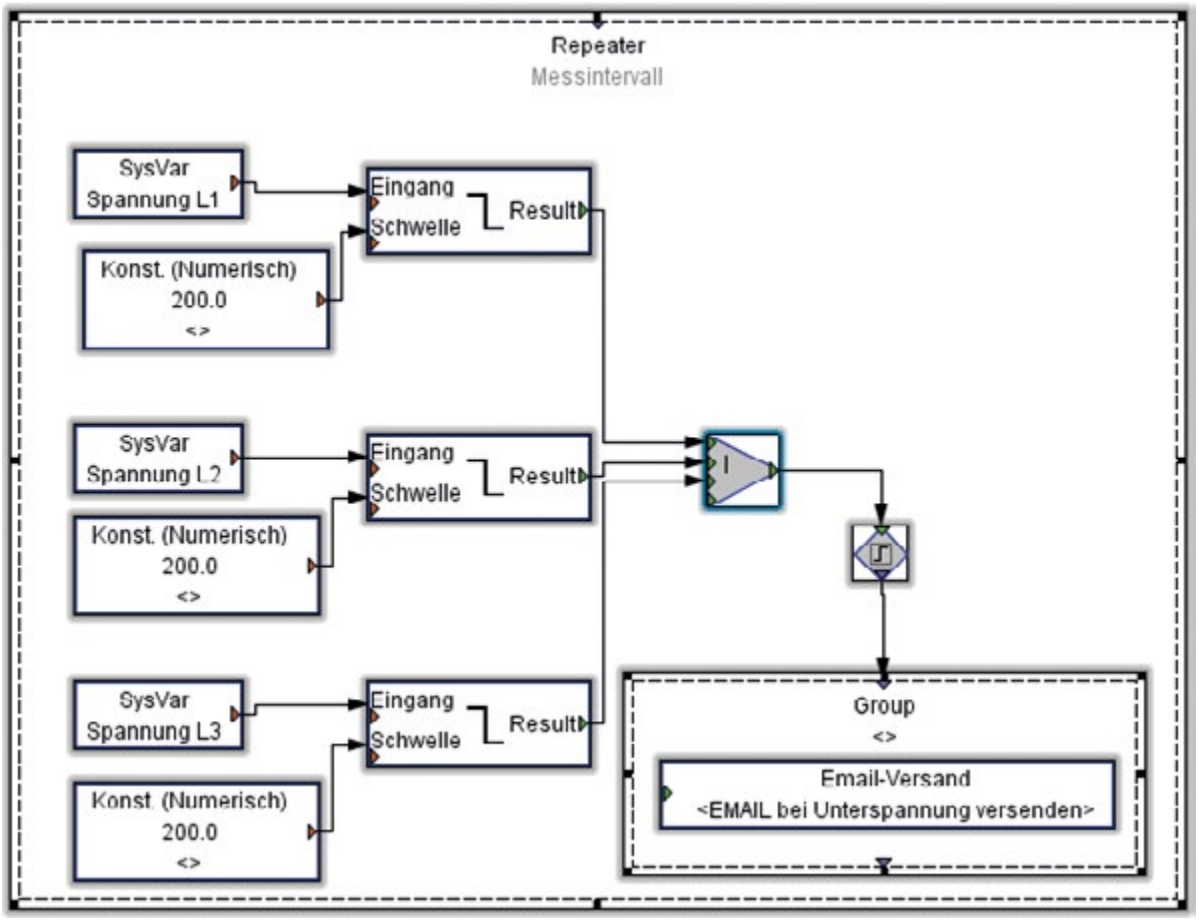



JANITZA SERVICES



342 Training courses
356 Commissioning
360 Mobile energy measurement device
362 PQ Quick Check
363 PQ-Health Check
364 PQ Special Measurement
365 Calibration
366 Other services

JANITZA TRAININGS

Our training programs provide practical, hands-on expertise to ensure the success of your projects. Choose the format that best fits your team, your project, and your daily work environment.

1. PUBLIC CLASSROOM TRAININGS (WETZLAR)

Our open courses offer practical learning in small groups – ideal for individual participants or small teams.

Formats

- GridVis® Training for:
  - Technology & Maintenance
  - Visualization & Energy Management
- Practical Seminars:
  - Residual Current Monitoring
  - Power Quality
  - Energy Management (ISO 50001)

Benefits:

- Direct exchange with experts and other participants
- Realistic, hands-on exercises

2. EXCLUSIVE CUSTOMER TRAINING (WETZLAR)

A dedicated training session exclusively for your company – ideal for teams working jointly on their own use cases.

Options

- Additional training days possible
- Work directly with your own data

Benefits

- Fully tailored to your company
- Focus on your specific questions and applications

3. ONSITE TRAINING (AT YOUR LOCATION)

We come to you – ideal for larger teams and project-specific topics.

Options

- Zone 1: up to 150 km
- Zone 2: 151–350 km
- Zone 3: over 350 km
- Additional training days possible

Benefits

- Training directly on your system
- Results can be implemented immediately in daily operations

4. ONLINE TRAININGS (LIVE AND LEARNING PLATFORM)

The flexible, location-independent alternative – ideal for distributed teams and fast implementation.

Formats

- GridVis® Online Software Training (3 × 3 hours):
  - Live sessions via MS Teams
  - Includes Adobe-based learning platform (e-learning modules, materials)
- Exclusive Live Online Training (closed group):
  - Customizable and exclusive for your company
- Coaching Session:
  - Personal consultation for targeted questions

Benefits

- Accessible from any location
- Quick and efficient implementation

TRAINING COURSES	
DESIGNATION	**ITEM NO.**
GridVis® Training: Technology & Maintenance **Professional commissioning – for stable measurement operation.** In two intensive days you will learn how to safely configure and efficiently maintain Janitza devices. Including live demos, alarm management, automation – ideal for service teams and systems managers. This technical classroom training teaches you everything you need for the safe commissioning and maintenance of Janitza measuring systems. With realistic exercises and direct system application, you will receive the tools for reliable and future-proof operation – including the integration of third-party hardware. **Target audience** Electrical engineers / skilled electricians Maintenance & service technicians System managers Technical facility management **Contents & focus** Configuration and commissioning of Janitza devices Integration of devices via Modbus TCP, M-Bus or OPC UA (third-party providers) Checking and completion of commissioning Updates, schedules & automations Alarm management and error messages **Including** Practical exercises with case studies Training materials Lunch & drinks Certificate of participation **Key data** Location: Wetzlar Duration: 2 days Number of participants: 4–8 people	**9500093**

TRAINING COURSES	
DESIGNATION	**ITEM NO.**
GridVis® Training: Visualization & Energy management	
Understanding energy management – creating measurable benefits from data with GridVis®. Two-day practical training with a focus on dashboards, reports, KPIs and automation – for sound analyses and decision-making bases. Ideal for energy managers, energy officers, facility teams, and environmental managers who want to derive real added value from measurement data. In this intensive two-day training, you will learn how to use the GridVis® software to efficiently evaluate measurement data and use it as a basis for decision-making in energy management. The focus is on practical applications – from device configuration to individual dashboards and automated reports. **Target audience** Energy Officer & Energy Manager Technical specialists & systems managers Controlling & Facility Management **Contents & focus** Visualization of energy and measured values Scheduled reports & KPI dashboards Analysis of energy flows Sankey diagrams & custom evaluations Project, user and location management Use of GridVis® for ISO 50001-relevant applications **Including** Practical exercises with case studies Training materials Lunch & drinks Certificate of participation **Key data** Location: Wetzlar Duration: 2 days Number of participants: 4–8 people	**9500092**

TRAINING COURSES	
DESIGNATION	**ITEM NO.**
Exclusive customer training **Closed training for your company – practical, individual and expandable upon request.** Can be booked as a 1 day or 2 day training course with an extended basic section and additional practical work on your system, depending on your needs. The training will take place as a face-to-face event at Janitza. You benefit from an optimally equipped training environment and direct exchange with our experts. Flexible booking – 1 or 2 days of classroom training 1 day: Compact workshop with basic content and application-oriented practical part 2 days Extended basic block intensive workshop section for detailed questions and system work **Combination of theory & practice (approx. 50 % each)** **Basics block** Introduction to the GridVis® software Integration and configuration of Janitza measurement devices Visualization and interpretation of measurement data **Workshop part (individual)** Dealing with specific questions from your company Working with your data or comparable examples Individual focuses, e.g., specific device types or functions **Your advantages at a glance** Exclusive training just for your company Modular structure: either 1 or 2 days Mixture of basic teaching & individual practical workshop Support from experienced specialist trainers **Including** Practical exercises with case studies Training materials Lunch & drinks Certificate of participation **Key data** Location: Wetzlar Duration: 1 day Option: An additional training day for + € 2,500 Number of participants: max. 8 people	**9500251**

TRAINING COURSES	
DESIGNATION	**ITEM NO.**
On-site training (Onsite) Zone 1 **Individual training at your location** – with all-inclusive price for a distance of up to 150 km (one way, Google Maps distance) Our on-site training brings knowledge to where it is needed: to your company. Our specialist trainers come to you, analyze your specific requirements together with you, and conduct practice-oriented training – individually, specifically and based on your own system. **You benefit from** Highest relevance through individual content Practical relevance through training on your own project Exclusivity among participants Dedicated contact person from needs assessment to implementation **Target audience** Technology Commissioning Energy manager or representative Project manager and much more **Contents** Joint determination in advance – tailored to your system and application The complete price includes: Training day with individual content up to 8 participants Preparation and follow-up Travel expenses (travel and accommodation) **Key data** Location: On-site Number of participants: max. 8 people Duration: 1 day Option: An additional training day for + € 1,200	**9500252**

TRAINING COURSES	
DESIGNATION	**ITEM NO.**
On-site training (Onsite) Zone 2 **Individual training at your location** – with all-inclusive price for a distance of 151 km – 350 km (one way, Google Maps distance) Our on-site training brings knowledge to where it is needed: to your company. Our specialist trainers come to you, analyze your specific requirements together with you, and conduct practice-oriented training – individually, specifically and based on your own system. **You benefit from** Highest relevance through individual content Practical relevance through training on your own project Exclusivity among participants Dedicated contact person from needs assessment to implementation **Target audience** Technology Commissioning Energy manager or representative Project manager and much more **Contents** Joint determination in advance – tailored to your system and application The complete price includes: Training day with individual content up to 8 participants Preparation and follow-up Travel expenses (travel and accommodation) **Key data** Location: On-site Number of participants: max. 8 people Duration: 1 day Option: An additional training day for + € 1,200	**9500253**

TRAINING COURSES	
DESIGNATION	**ITEM NO.**
On-site training (Onsite) Zone 3 **Individual training at your location** – with all-inclusive price for a distance of over 350 km (one way, Google Maps distance) Our on-site training brings knowledge to where it is needed: to your company. Our specialist trainers come to you, analyze your specific requirements together with you, and conduct practice-oriented training – individually, specifically and based on your own system. **You benefit from** Highest relevance through individual content Practical relevance through training on your own project Exclusivity among participants Dedicated contact person from needs assessment to implementation **Target audience** Technology Commissioning Energy manager or representative Project manager and much more **Contents** Joint determination in advance – tailored to your system and application The complete price includes: Training day with individual content up to 8 participants Preparation and follow-up Travel expenses (travel and accommodation) **Key data** Location: On-site Number of participants: max. 8 people Duration: 1 day Option: An additional training day for + € 1,200	**9500254**

TRAINING COURSES	
DESIGNATION	**ITEM NO.**
Additional training day on-site Extend your on-site training with another training day. Would you like more time for additional topics, extended exercises or in-depth practice? No problem: Book a second training day immediately afterwards at a fixed price. The additional day will be tailored to the content of the first training and will provide space for: – Expansion or deepening of special topics – Evaluation of initial application experiences – Advanced exercises on your system – Individual questions from your participants **Advantages** No need to travel again – efficient and predictable Same trainer, continuous knowledge transfer	**9500255**
Practical seminar: Residual current monitoring **Identify, evaluate and document differential currents.** In this 1.5-day seminar, you will learn how to correctly use and interpret residual current monitoring systems – for greater system safety, availability, and legal compliance. This practical seminar provides you with in-depth knowledge of the selection, commissioning, and use of residual current monitoring devices in industrial environments. You will learn about the underlying standards, practice configuring RCM monitoring devices, and analyze real measurement results – including creating reports for testing and maintenance purposes. The goal is to make electrical systems safer and more fail-safe – with clear recommendations for operation and maintenance. **Target audience** Electricians Maintenance personnel Safety Officer **Contents** Current legal regulations and standards Operation and configuration of residual current monitoring devices Residual current measurement in industrial applications Analysis of measurement results and creation of individual reports **Including** Training materials Practical exercises with typical scenarios Lunch & drinks Certificate of participation **Key data** Duration: 1.5 days Location: Wetzlar Minimum number of participants: 4–8 people	**9000032**

TRAINING COURSES	
DESIGNATION	**ITEM NO.**
Practical seminar: Power quality **Measure and evaluate power quality.** Experience how you can reliably detect and analyze voltage problems with the UMG 512-PRO network analyzer – with practical exercises for analyzing and assessing power quality. This 1.5-day practical seminar provides you with compact, application-oriented knowledge of power quality. You will learn how to use a Class A network analyzer to specifically identify, evaluate and document voltage problems. The focus is on practical exercises with measurement technology and software – for stable processes, a longer service life for your systems and standard-compliant evaluations. **Target audience** System managers Electricians Technology **Contents** Basics of power quality and its operational relevance Relevant standards (e.g. EN 50160, IEC 61000-4-30) Operation of the UMG 512-PRO Class A network analyzer Detection and analysis of typical voltage disturbances Practical exercises with measurement data and software evaluation **Including** Training materials Practical exercises with real data Lunch & drinks Certificate of participation **Key data** Duration: 1.5 days Location: Wetzlar Minimum number of participants: 4–8 people	**9500090**

TRAINING COURSES	
DESIGNATION	**ITEM NO.**
Practical seminar: Energy Management **Energy management according to ISO 50001 in practice.** Learn in 1.5 days how to develop energy performance indicators (EnPIs), systematically analyze data, and specifically improve your energy efficiency – with GridVis® software and real-life examples. This compact seminar provides practical knowledge on the introduction and application of a standard-compliant energy management system in accordance with DIN EN ISO 50001. You will learn how to collect, evaluate, and visualize energy data with GridVis®, define EnPIs, and create meaningful reports – for greater transparency, efficiency, and continuous improvement in your company. **Target audience** Energy officer Environmental Manager Technicians & Facility Management **Contents** Principles and requirements of DIN EN ISO 50001 Creation & use of energy performance indicators (EnPIs) Data acquisition, evaluation & visualization with GridVis® Creation of dashboards and reports Data import and data management **Including** Training materials Practical exercises with GridVis® software and examples Lunch & drinks Certificate of participation **Key data** Duration: 1.5 days Location: Wetzlar Minimum number of participants: 4–8 people	**9500091**

TRAINING COURSES	
DESIGNATION	**ITEM NO.**
Software Training GridVis® – Online **Live online training with a personalized learning path – ideal for distributed teams.** In three compact online sessions, you will learn the basics of efficient use of the GridVis® software – from setup to evaluation. Includes access to our learning platform with e-learning modules, quizzes, and course materials – available for flexible use before and after training. The online training for GridVis® software combines live training with digital learning content – ideal for distributed locations or mobile workplaces. The training consists of three interactive online sessions of 3 hours each and is supplemented by a digital learning path on our Adobe-based learning platform. You will receive access to our digital learning platform two weeks before the course begins. You can find here: – Step-by-step e-learning preparation – Quiz to test your knowledge – Your personal training materials – The live appointments with direct calendar integration After the training, access to the platform remains active for two weeks – so you can consolidate and review the content. The live sessions are conducted via Microsoft Teams and TeamViewer and include many practical exercises on an online training system. **What you need** Internet access, headset, two monitors (recommended), camera (optional) Microsoft Teams & TeamViewer (a provided account is used) Use of the Adobe Cloud (for access to the LMS) **Contents** Introduction to the GridVis® software Project management & licensing Integrate and configure devices Data imports & virtual devices Automation, reports & dashboards User management & data exports **Key data** Duration: 3 x 3 hours Location: Virtual Number of participants: 4–6 people The article must be ordered per participant. The learning platform is activated automatically. Access and all materials are managed by the LMS.	**9000040**

TRAINING COURSES	
DESIGNATION	**ITEM NO.**
Exclusive live online training	
Exclusive live online training (closed group) Three interactive online sessions of 3 hours each – combined with an Adobe-based learning platform. Can be booked exclusively for a company, including adaptation to company-specific topics. Would you like to book our GridVis® online training exclusively for your company? No problem. This format offers you three interactive online sessions of 3 hours each, combined with an accompanying digital learning path on our Adobe-based learning platform. The process is based on our proven standard training, but is conducted as a closed group, and the content can be easily adapted to your requirements – e.g., with a focus on specific devices, functions, or use cases.You will receive access to our digital learning platform two weeks before the course begins. You can find here: – Step-by-step e-learning preparation – Quiz to test your knowledge – Your personal training materials – The live appointments with direct calendar integration After the training, access to the platform remains active for two weeks – so you can consolidate and review the content. The live sessions are conducted via Microsoft Teams and TeamViewer and include many practical exercises using an online training system.	**9500256**

What you need
Internet access, headset, two monitors (recommended), camera (optional)
Microsoft Teams & TeamViewer (a provided account is used)
Use of the Adobe Cloud (for access to the LMS)

Key data
Duration: 3 x 3 hours
Location: Virtual
Number of participants: 4–6 people

TRAINING COURSES	
DESIGNATION	**ITEM NO.**
Coaching Session – Online **Flexible training quota:** Your individual questions in direct exchange with our trainers. Book an individual hourly quota for maximum flexibility in training, consulting, and implementation of your requirements. Our specialist trainer is available for 60-minute sessions – whether for quick questions, targeted training, or technical analysis. Appointments are scheduled flexibly online, and you can keep track of remaining hours via our system. **Your advantages** Maximum flexibility Continuous cooperation Use for consulting and training (all-in-one)	**DL5101140**
Basic access to the Janitza e-learning platform Discover our digital training offer free of charge for 1 month: Selected content about products, industries and applications. Ideal for onboarding, partner training and a first insight into our world of topics. **Get free basic access for 1 month now – Janitza e-Learning Platform** With our free basic access, you get an exclusive insight into Janitza's digital learning offerings. Perfect for new employees, partner companies, and interested customers who want to better understand our solutions and the technologies behind them. **What you can expect** Multilingual e-learning modules introducing our core products and industry solutions Basic knowledge of residual current, power quality and energy monitoring Interactive learning content to promote practical understanding **Your advantages** No risk – free access without contract Compact introduction for sales, technology, service and new employees Ideal preparation for advanced premium courses	**9500257**


Energy Data Management
TÜV SÜD
ISO 50001
EN 16247-1
2025
AUTOMOTIVE
Smart Monitoring
Janitza
SAMSUNG

COMMISSIONING

Janitza has decades of know-how in the field of energy measurement technology and complete monitoring systems. We will be happy to support you from the conceptual design to the commissioning of your monitoring solutions. This includes the complete range of tasks:

- Installation of the GridVis® system software
- Creation of customer projects in GridVis® with a measurement point structure
- Parameter configuration of the measurement devices, data loggers and other components to be integrated into the system according to customer specifications (form VBI for preparation)
- Checking the bus function and accessibility of the measurement devices
- Structure of graph sets
- Structure of topology views
- Briefing of operating personnel in the use of Janitza energy management system hardware and software components
- Official system handover

COMMISSIONING	
DESIGNATION	**ITEM NO.**
Installation of GridVis® with up to 10 devices Installation of the GridVis® software on a PC or server including set up of the system by the manufacturer. Creation of a Janitza database or connection of an existing MySQL or MSSQL database, commissioning, instruction of the operating personnel, preparation of the final report with handover of the relevant data for hardware and software, topology configuration as well as GridVis® device list to the person responsible for the system. Travel costs/overnight stays will be charged additionally according to expenditure.	**DL5101090**
Installation of GridVis® with more than 10 devices Installation of the GridVis® software on a PC or server including set up of the system by the manufacturer. Creation of a Janitza database or connection of an existing MySQL or MSSQL database, commissioning, instruction of the operating personnel, preparation of the final report with handover of the relevant data for hardware and software, topology configuration as well as bus address list of the devices to the person responsible for the system. Travel costs/overnight stays will be charged additionally according to expenditure.	**DL5101091**
Installation of GridVis® on an additional computer Installation of GridVis® Desktop on an additional PC, incl. set up of the system by the manufacturer, instruction of the operating personnel, preparation of the final report. Travel costs/overnight stays will be charged additionally according to expenditure.	**DL5101092**
Acceptance/inspection/wiring Commissioning/acceptance of the physical wiring of the system by qualified personnel. Checking of Modbus/Ethernet cabling with regard to cable type, polarity, shield grounding, termination, patching of Ethernet connections, compliance with physical topology, etc. Preparation of communication and electrotechnical data lists in Excel format and handover to the person responsible for the system. Travel costs/overnight stays will be charged additionally according to expenditure.	**DL5101093**
Commissioning of a type 1 measurement device Programming of the parameters of the measurement device by the manufacturer, integration into the GridVis® software for the devices 509, 512, 604, 605, 800, 801, 806, RCM202-AB, RCM201-ROGO, commissioning of the system, instruction of the operating personnel, backup of the configuration data as a text file. Travel costs/overnight stays will be charged additionally according to expenditure.	**DL5101094**
Commissioning of a type 2 measurement device Programming of the parameters of the measurement device by the manufacturer, integration into the GridVis® software for the devices UMG 103, 104, 96S, 96-S2, 96RM series, 96PA series, 96-PQ-L series, module 800-CT8-A, module 800-CT8-LP, module 800-CT8-DI14, module 800-CT24, commissioning of the system, instruction of the operating personnel, backup of the configuration data as a text file. Travel costs/overnight stays will be charged additionally according to expenditure.	**DL5101095**

COMMISSIONING	
DESIGNATION	**ITEM NO.**
Commissioning of a type 4 measurement device Programming of the parameters of the ProData 2 by the manufacturer, integration into the GridVis® software, commissioning of the system, instruction of the operating personnel, backup of the configuration data as a text file. Travel costs/overnight stays will be charged additionally according to expenditure.	**DL5101097**
Commissioning of a type 5 measurement device Programming of the energy meter parameters by the manufacturer, recording of the data on site, integration into the GridVis® software, commissioning of the system, instruction of the operating personnel, preparation of the final report. Travel costs/overnight stays will be charged additionally according to expenditure.	**DL5101123**
Commissioning of generic Modbus meters Programming of the parameters of Modbus measurement devices according to the manufacturer's release list of the Janitza electronics GmbH company via generic Modbus, implementation in the system, instruction of the operating personnel, backup of the configuration data as a text file. Travel costs/overnight stays will be charged additionally according to expenditure.	**DL5101102**
Commissioning of pulse media meters Programming of the parameters of the pulse media meters, setting of the pulse valencies, implementation in the system, instruction of the operating personnel. Travel costs/overnight stays will be charged additionally according to expenditure.	**DL5101103**
Commissioning of the Solvimus MBus Gateway Commissioning of the gateway by Janitza, recording of the data on site, integration in the GridVis® software, instruction of the operating personnel, preparation of the final report. Travel costs/overnight stays will be charged additionally according to expenditure.	**DL5101104**
Commissioning of MBus media meters Programming of the parameters of the M-Bus media meters for connection to the Solvimus MBus Gateway, recording of the data on site, setting of the M-Bus parameters, implementation in the system, instruction of the operating personnel, preparation of the final report. Travel costs/overnight stays will be charged additionally according to expenditure. Note: An overnight stay is required for 25 media meters or more.	**DL5101105**
Commissioning of OPC UA servers Installation/commissioning of Multi Protocol Servers by Janitza. Commissioning of the system, instruction of the operating personnel, preparation of the final report. Travel costs/overnight stays will be charged according to expenditure.	**DL5101106**
Integration in the OPC UA server Integration of a measurement device in the Multi Protocol server, recording of data on site, creation of approx. 5 measured values per measurement device, instruction of the operating personnel, preparation of the final protocol. Travel costs/overnight stays will be charged additionally according to expenditure.	**DL5101107**
Commissioning and parametrization of JPC 100 Programming of the JPC 100 parameters by the manufacturer. – Configuartion of IP settings – Integration or connection of measurement devices – Creation and backup of configuration data Travel costs/overnight stays will be charged additionally according to expenditure. Note: For the integration of devices, the artices „IBN measurement devices type 1 to type 5“ must also be selected.	**DL5101151**
Upgrade of GridVis® Upgrade of the existing and installed GridVis® software to a higher edition, incl. programming of the system by the manufacturer, commissioning, instruction of the operating personnel. preparation of the final protocol. Travel costs/overnight stays will be charged additionally according to expenditure.	**DL5101108**

COMMISSIONING	
DESIGNATION	**ITEM NO.**
VISU type 1 service Creation of topology pages in GridVis®, virtual measurement points (key performance indicators), cost center/power quality reports (EN 50160 / EN 61000-2-4) on customer request. Instruction of operating personnel, preparation of final report. A requirement specification must be provided by the customer. Travel costs/overnight stays will be charged additionally according to expenditure.	**DL5101109**
VISU type 2 service Creation of a dashboard page in the GridVis® software with about 5 standard widgets, 5 measurement devices and 20 measured values. A requirement specification must be provided by the customer. Travel costs/overnight stays will be charged additionally according to expenditure.	**DL5101110**
VISU type 3 service Creation of a template page in the GridVis® software with approx. 5 standard widgets and 20 measured values. A requirement specification must be provided by the customer. Travel costs/overnight stays will be charged additionally according to expenditure.	**DL5101111**
VISU type 4 service Creation of a dashboard overview page in the GridVis® software with linking to up to 10 subpages. Travel costs/overnight stays will be charged additionally according to expenditure.	**DL5101112**
VISU type 5 service Creation of a Sankey diagram or KPI widget with approx. 20 measured values. Preparation of a requirement specification in consultation with the client. Travel costs/overnight stays will be charged additionally according to expenditure.	**DL5101113**
VISU type 6 service Creation of custom graphics for the dashboard pages. A requirement specification must be provided by the customer.	**DL5101114**
Testing of the residual/PE current measurement Testing of residual/PE current measurement by qualified personnel. Compliance with the set limit value must be checked in a live simulation (e.g. test transformer) and the entire alarm/message loop of the Janitza system must be checked for the case of a limit value violation. This must be performed for each individual monitored incoming/outgoing feeder. Results must be logged and submitted to the specialist engineer in hardware and software form (Excel). Minimum report requirement: Project name, distributor name, feeder name, meter name, contractor name, tester name, measured value, message chain function, impressed current, type of test instrument, signature and date, price per res./transformer. Travel costs/overnight stays will be charged according to expenditure.	**DL5101125**
Adaptation of existing software Adaptation of existing software to the new constellation of the system incl. software and device updates, integration of the new devices in the software, optional creation of an additional database connection, instruction of the operating personnel, preparation of the final report. Travel costs/overnight stays will be charged according to expenditure.	**DL5101126**
Instruction Project-related instruction in the handling of the software after commissioning, instruction in the functionality of the overall system. Operation of the software with setting options, evaluation displays, visualization, etc. Travel costs/overnight stays will be charged according to expenditure.	**DL5101127**

COMMISSIONING	
DESIGNATION	**ITEM NO.**
Modification of system parameters Modification of individual system parameters on site, per bus station after commissioning by the service technician within the first 12 months after initial commissioning, e.g. – Modification of the recording configuration per device – Modification of nominal values per device – Modification of current transformer settings per device – Adjustment of reports per device in the report – Firmware update per device – Software update as far as required Necessary hardware is included on loan as far as required. Modification of parameters via the option of VPN or remote access included. Access is to be ensured and provided by the customer. Alternative: Access via TeamViewer. Travel costs/overnight stays will be charged additionally according to expenditure.	**DL5101133**
Creation of a virtual device Creation of virtual measurement points (devices) in GridVis® with max. 10 input and output measured values. Travel costs/overnight stays will be charged according to expenditure.	**DL5101134**

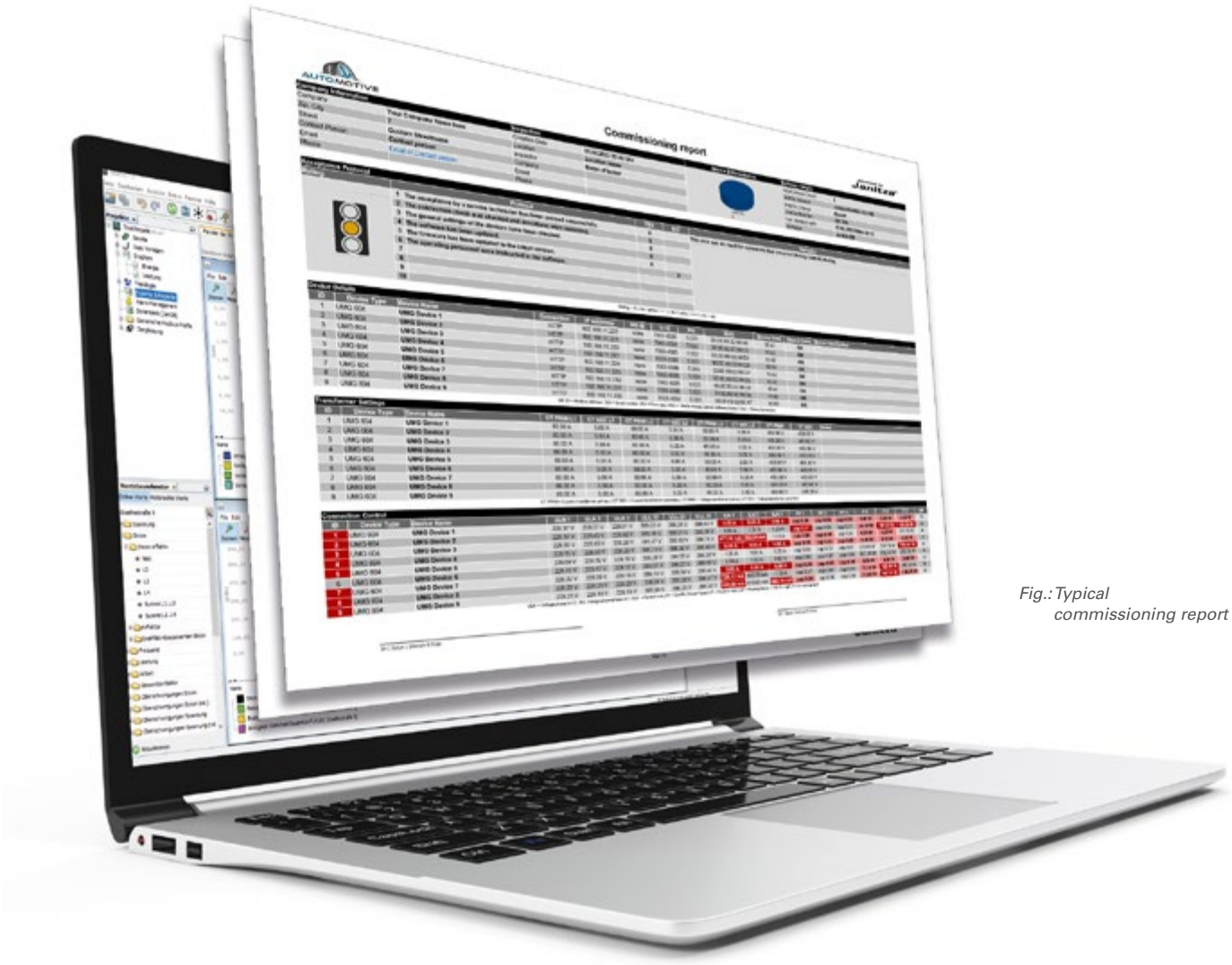

Fig.: Typical commissioning report

MOBILE MEASUREMENT DEVICES

Typical problems such as defective LED lamps, exploded capacitors, short lifetimes of converters or other electrical consumers, flicker phenomena, manufacturing failures due to voltage dips, etc. are frequently observed in practice. In the case of specific power quality problems where no permanently installed network analyzers are available, we offer mobile power analyzers of the MRG (UMG) series for temporary measurement and fault analysis. The GridVis® Essentials Power Grid Monitoring Software is provided in the measuring case for use just as with permanently installed UMG measurement devices. This means that no time-consuming training period is necessary.

MOBILE ENERGY MEASUREMENT DEVICES	
DESIGNATION	**ITEM NO.**
MRG 96-PQ-L-LP – portable power analyzer with RCM – For measuring, monitoring, and controlling electrical parameters in power distribution systems includes residual current monitoring – Includes GridVis®-Essential power grid monitoring software – Includes laptop backpack – Includes power cable – Includes voltage measuring cable set, consisting of: 3 x black measuring cable, 2 m, with fuse holder, including 2.5 A fuse 1 x blue measuring cable, 2 m 1 x green-yellow measuring cable, 2 m – Includes operating current measuring cable set, consisting of: 4 x Rogowski coils (ø 175 mm) with plug connection cable 3 m – Includes residual current connection cable 3 m with plug/open cable end (RCM current transformer optionally available, item no. 1503400, 1503401, 1503402)	**5216907**
MRG 512 PQ Flex – portable power quality analyzer for network analysis according to EN 50160 – Comprehensive grid data acquisition and fault recording – Evaluation of critical grid parameters (including harmonics, short-term interruptions, and differential current monitoring, etc.) and compensation design – Includes GridVis®-Essential power grid monitoring software – Includes carrying case – Includes grid connection cable – Includes voltage measurement cable set – Includes operating current measurement cable set, consisting of: 4 Rogowski coils (Ø 190 mm) with 3 m connection cable for operating current measurement, item no. 1503608. – Includes 3 m differential current connection cable with plug/open cable end (RCM current transformer optionally available, item no. 1503400, 1503401, 1503402)	**5216905**



Fig.: MRG measuring case accessories (example)



Fig.: MRG 512-PRO PQ Flex – mobile Class A power quality analyzer



Fig.: MRG 96-PQ-L-LP Flex – mobile network analyzer

PQ-QUICK CHECK

PQ Quick Check is used to determine the power quality status quickly and easily. It includes an evaluation of the power quality according to EN 61000-2-4 or EN 50160 and an individual evaluation of selected measured variables.

PQ QUICK CHECK	
DESIGNATION	**ITEM NO.:**
PQ Quick Check according to EN 61000-2-4:2002 or EN50160 Analysis and evaluation of recorded power quality parameters according to the standards EN 50160 or EN 61000-2-4:2002 with recommended action in the event of limit violations or critical parameters. The measurement data to be evaluated are read out by the customer into the GridVis® software and transmitted to Janitza via data transfer. Prerequisite: Installed measurement devices of the types UMG 96-PQ-L (with software activation on IEC 61000-4-30 Class S), UMG 604-PRO, UMG 605-PRO, UMG 801, UMG 509-PRO, UMG 512-PRO. In each case with activated PQ recording and data from at least one contiguous calendar week. Alternatively, the measurement can also be done using a measuring case on a rental basis. Analysis and evaluation of recorded power quality parameters according to the standard EN 61000-2-4:2002 can be completed using devices of the types UMG 604-PRO, UMG 509-PRO, UMG 801. Analysis and evaluation of recorded power quality parameters according to the standards EN 50160 or EN 61000-2-4:2002 can be completed using devices of the types UMG 96-PQ-L (with software activation on IEC 61000-4-30 Class S), UMG 605-PRO, UMG 512-PRO.	**DL5101024**

PQ QUICK CHECK		
MEASURED VARIABLE	**EN 61000-2-4:2002**	**EN 50160**
Frequency	■	■
Voltage effective values	■	■
Voltage unbalance	■	■
Voltage harmonics*1	■	■
THD-U	■	■
Long-term flicker	–	■
Current effective values	■	■
Current harmonics	■	■
Active power, displacement reactive power and apparent power	■	■
CosPhi	■	■
Voltage dip (sag)	■	■
Voltage swell	■	■
Voltage interruption*2	■	■

**1 up to the 25th order for EN 50160 and up to the 50th order for EN 61000-2-4. The UMG 604-PRO is used to evaluate the voltage harmonics up to the 40th order.*
**2 Recording of voltage interruption only applicable with UMG 96-PQ-L, UMG 605-PRO, UMG 512-PRO and UMG 801*

PQ Quick Check allows you to determine your power quality status quickly and easily. It does not, however, provide a detailed power quality analysis.
In the event of limit violations or critical states, you will need to conduct a detailed investigation of the power quality.
A comprehensive solution can then be drawn up based on these results.

PQ-HEALTH CHECK

PQ Health Check is used to provide a detailed analysis of the power quality status and detailed power quality analysis. It includes an evaluation of the power quality according to EN 50160, EN 61000-2-2, EN 61000-2-4 or EN 61000-2-12 and an individual evaluation of selected measured variables.

PQ HEALTH CHECK	
DESIGNATION	**ITEM NO.:**
PQ Health Check according to EN 50160/EN 61000-2-2/EN 61000-2-4/EN 61000-2-12 Analysis and evaluation of recorded power quality parameters according to the standards EN 50160, EN 61000-2-2, EN 61000-2-4 or EN 61000-2-12 with recommended action in the event of limit violations or critical parameters. In addition to the power quality parameters taken into account in the aforementioned standards, the measured variables of current and voltage interharmonics up to the 50th order, voltage supraharmonics up to 150 kHz and current supraharmonics up to 9 kHz are also analyzed and evaluated. In order to complete a measurement in compliance with the various standards, recording must be over a period of at least 7 days, and a recording interval of 600 seconds must be used. This ensures not only normal production processes are recorded, but also any downtimes, such as at night or at the weekend, as well as various switching and operating modes during the measurement period are taken into account too.	**DL5101128**

PQ HEALTH CHECK	
MEASURED VARIABLE	**PQ HEALTH CHECK**
Frequency	■
Voltage effective values, voltage unbalance, voltage of positive, negative and zero sequence component	■
Voltage harmonics up to the 40th or 50th order, voltage interharmonics up to the 40th or 50th order, voltage supraharmonics (2–9 kHz), voltage supraharmonics (9–150 kHz with 2 kHz frequency band)	■
THD-U, THD-I, TDD	■
Current harmonics up to the 40th or 50th order, current interharmonics up to the 40th or 50th order, current supraharmonics (2–9 kHz)	■
K-factor	■
Current effective values, current unbalance, current of positive, negative and zero sequence component	■
Active power, reactive power and apparent power, displacement reactive power, distortion reactive power	■
CosPhi	■
Power factor	■
Short-term flicker, long-term flicker	■
Rapid voltage change, voltage dip (sag), voltage swell, voltage interruption	■
Transient overvoltage	■
Current and voltage waveforms	■
Commutation notch	■
Ripple control signal	■

PQ SPECIAL MEASUREMENT

PQ Special Measurement is used to provide a detailed analysis of the power quality status and detailed power quality analysis of a network user, which may be a consumption plant, generation plant and/or storage plant. PQ Special Measurement includes the interfering source identification or interference analysis of customer systems, evaluation of power connections of generation plant and storage plant according to D-A-CH-CZ, VDE-AR-N 4110 or FGW TR-3 and evaluation of current harmonics of customer systems according to IEEE 519 etc. (following consultation with the customer). This is a customer-specific measurement.

PQ SPECIAL MEASUREMENT	
DESIGNATION	**ITEM NO.:**
PQ Special Measurement according to EN 50160/EN 61000-2-2/EN 61000-2-4/EN 61000-2-12/D-A-CH-CZ/ VDE-AR-N 4110/FGW TR-3/IEEE 519 Analysis and evaluation of recorded power quality parameters in customer systems according to the standards EN 50160, EN 61000-2-2, EN 61000-2-4, EN 61000-2-12, D-A-CH-CZ, VDE-AR-N 4110, FGW TR-3 or IEEE 519 with recommended action in the event of limit violations or critical parameters. In order to complete a measurement in compliance with the various standards, recording must be over a period of at least 7 days, and a recording interval of 3 seconds and/or 10 seconds and/or 600 seconds (depending on the measured variable) must be used. This ensures not only normal production processes are recorded, but also any downtimes, such as at night or at the weekend, as well as various switching and operating modes during the measurement period are taken into account too. In addition to the requirements laid down in the aforementioned standards, the following measured variable are also evaluated as part of the PQ Special Measurement.	**DL5101129**

PQ SPECIAL MEASUREMENT	
MEASURED VARIABLE	**PQ SPECIAL MEASUREMENT**
Frequency	■
Voltage effective values, voltage unbalance, voltage of positive, negative and zero sequence component	■
Voltage harmonics up to the 40th or 50th order, voltage interharmonics up to the 40th or 50th order, voltage supraharmonics (2–9 kHz), voltage supraharmonics (9–150 kHz with 2 kHz frequency band)	■
THD-U, THD-I, TDD	■
Current harmonics up to the 40th or 50th order, current interharmonics up to the 40th or 50th order, current supraharmonics (2–9 kHz)	■
K-factor	■
Current effective values, current unbalance, current of positive, negative and zero sequence component	■
Active power, reactive power and apparent power, displacement reactive power, distortion reactive power	■
CosPhi	■
Power factor	■
Short-term flicker, long-term flicker	■
Rapid voltage change, voltage dip (sag), voltage swell, voltage interruption	■
Transient overvoltage	■
Current and voltage waveforms	■
Commutation notch	■
Ripple control signal	■

CALIBRATION

Calibration additionally includes visual inspection for external damage and damage to the electronics, a comprehensive functional check with automatic testing and updating of the firmware.

After calibration, a high-voltage test (safety test) is performed and a factory calibration protocol is supplied.

CALIBRATION	
DESIGNATION	**ITEM NO.**
Calibration type 1: UMG 604 / UMG 604-PRO / UMG 605 / UMG 605-PRO / UMG 801 / 800-CT8-A module / 800-CT8-LP module / UMG 96RM / UMG 96-PA / UMG 96-PQ-L / UMG 508 / UMG 509 / UMG 509-PRO / UMG 511 / UMG 512 / UMG 512-PRO – Visual inspection for external damage – Open the device and visually check for visible damage to the conductive tracks – Check of the functions with an automatic test – Firmware update – Calibration – High voltage test (safety check) – Delivery of a factory calibration protocol	**DL5101143**
Calibration type 2: UMG 103-CBM / UMG 96-S2 – Visual inspection for external damage – Open the device and visually check for visible damage to the conductive tracks – Check of the functions with an automatic test – Firmware update – Calibration – High voltage test (safety check) – Delivery of a factory calibration protocol	**DL5101144**
Calibration type 3: MRG measuring case – Visual inspection for external damage – Open the device and visually check for visible damage to the conductive tracks – Check of the functions with an automatic test – Firmware update – Calibration – High voltage test (safety check) – Delivery of a factory calibration protocol	**DL5101145**

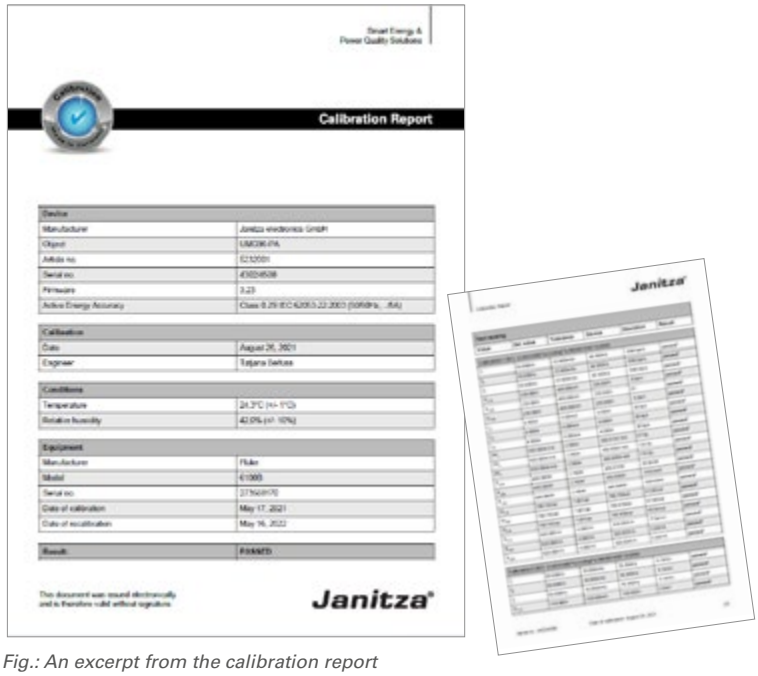

Fig.: An excerpt from the calibration report

INTEGRATION TEST OF GENERIC MODBUS DEVICES

We test for you whether third-party products such as water meters, gas meters and other measurement devices can be integrated via Modbus and are compatible with GridVis®.

INTEGRATION TEST OF GENERIC MODBUS DEVICES	
DESIGNATION	**ITEM NO.**
Integration test of generic Modbus devices The customer shall provide the support department of Janitza electronics GmbH with all components required for the integration test free of charge. The components must have the relevant basic configuration with which the component will be used by the customer in the field (Janitza will not adapt the component with regard to changes to the hardware with the manufacturer's own software). Necessary documentation shall be provided. The parameters/measured values which are to be recorded and processed by the GridVis® parameterization/evaluation software must be presented in writing (requirement specification); the following points, among others, must be taken into account here: Modbus address list (with byte order; function code), physical parameter (type; SI unit), number and type of TCP ports, data format, baud rate, parity, serial device address, scalings, update rate of Modbus register addresses.	**5101014**

TEAMVIEWER SESSION

Take advantage of the many years of experience of our engineers and service technicians, solve problems and accomplish new tasks quickly and efficiently via remote sessions. Commissioning and training are also possible via remote maintenance.

TEAMVIEWER SESSION	
DESIGNATION	**ITEM NO.**
TeamViewer sessions	**DL5101050**

TECHNICAL APPENDIX

370 Standards and directives
384 High availability through 3-in-1 monitoring
422 Continuous measurement
427 Formulary
434 Current transformer
445 Communication
456 Prerequisite and confirmation for commissioning (VBI)

APPLICABLE STANDARDS

Janitza develops, manufactures and tests its measurement devices and products in accordance with internationally applicable standards and directives. The main national and international standards related to our products, solutions and applications are as follows:

GENERAL STANDARDS AND EMC STANDARDS:

- IEC/EN 60868-0: Assessment of flicker severity.
- IEC/EN 61000-2-2: Electromagnetic compatibility (EMC): Environment; Compatibility levels for low-frequency conducted disturbances and signaling in public low-voltage power supply systems.
- IEC/EN 61000-2-4: Electromagnetic compatibility (EMC): Environment; Compatibility levels in industrial plants for low-frequency conducted disturbances.
- IEC/EN 61000-3-2: Limits for harmonic current emissions (equipment current draw ≤ 16 A per phase).
- IEC/EN 61000-3-3: Limits – Limitation of voltage changes, voltage fluctuations and flicker in public low-voltage supply systems, for equipment with rated current < 16 A per phase and not subject to conditional connection.
- IEC/EN 61000-3-4: Electromagnetic compatibility (EMC): Limits – Limitation of Emission of Harmonic Currents in Low-Voltage Power Supply Systems for Equipment with Rated Current Greater Than 16 A.
- IEC/EN 61000-3-11: Electromagnetic compatibility (EMC): Limits – Limitation of voltage changes, voltage fluctuations and flicker in public low-voltage supply systems - Equipment with rated current < 75 A and subject to conditional connection.
- IEC/EN 61000-3-12: Limits for harmonic currents produced by equipment connected to public low-voltage systems with input current > 16 A and ≤ 75 A per phase.
- IEC/EN 61557-12: Electrical safety in low voltage distribution systems up to 1000 V a.c. and 1 500 V d.c. – Equipment for testing, measuring or monitoring of protective measures.

POWER QUALITY STANDARDS:

- EN 50160: Voltage characteristics of electricity supplied by public electricity networks.
- D-A-CH-CZ: Technical rules for the assessment of grid distortions in Germany, Austria, Switzerland and the Czech Republic.
- TOR D2: Technical and organizational rules for operators and users of electrical networks; Part D: Special technical rules; main section D2: Directive for the assessment of grid distortions.
- IEEE 519: (Recommended Practices and Requirements for Harmonics Control in Electrical Power Systems) as a joint recommendation by electric utilities and operators to limit the effects of non-linear loads by reducing harmonics.
- ENGINEERING RECOMMENDATION: G5/4-1) (planning levels for harmonic voltage distortion to be used in the process for the connection of nonlinear equipment) as a directive of the Energy Networks Association (UK) for limiting the effects of non-linear loads by reducing harmonics at the transfer point (PCC). Valid in Great Britain and Hong Kong.
- IEEE1159-3 PQDIF: Recommended Practice for the Transfer of Power Quality Data.
- ITIC (CBEMA): The Information Technology Industry Council (ITI) curve represents the resilience of computers / power supplies in terms of the level and duration of voltage disturbances.

STANDARDS FOR POWER QUALITY NETWORK ANALYZERS

- IEC/EN 61000-4-2: Testing and measurement techniques – Electrostatic discharge immunity test.
- IEC/EN 61000-4-3: Testing and measurement techniques – Radiated, radio-frequency, electromagnetic field immunity test.
- IEC/EN 61000-4-4: Testing and measurement techniques – Electrical fast transient/burst immunity test.
- IEC/EN 61000-4-5: Testing and measurement techniques – Surge immunity test.
- IEC/EN 61000-4-6: Testing and measurement techniques – Immunity to conducted disturbances, induced by radio-frequency fields.

- IEC/EN 61000-4-7: Testing and measurement techniques – General guide on harmonics and interharmonics measurements and instrumentation, for power supply systems and equipment connected thereto.
- IEC/EN 61000-4-8: Testing and measurement techniques – Power frequency magnetic field immunity test.
- IEC/EN 61000-4-11: Testing and measurement techniques – Voltage dips, momentary interruptions and voltage variations immunity tests.
- IEC/EN 61000-4-15: Testing and measurement techniques – Flicker meter, functional and design specifications.
- IEC/EN 61000-4-30: Testing and measurement techniques – Power quality measurement methods.

STANDARDS FOR ENERGY MEASUREMENT DEVICES

- DIN EN 62053-21: Electricity metering equipment. Particular requirements. Part 21: Static meters for AC active energy (classes 1 and 2).
- DIN EN 62053-22: Electricity metering equipment. Particular requirements. Part 22: Static meters for AC active energy (classes 0.2S and 0.5S).
- DIN EN 62053-23: Electricity metering equipment. Particular requirements. Part 23: Static meters for reactive energy (classes 2 and 3).
- DIN EN 62053-31: Electricity metering equipment (a.c.) Part 31: Pulse output devices for electromechanical and electronic meters (two wires only).
- DIN EN 60529: Degrees of protection provided by enclosures (IP code).

STANDARDS FOR ENERGY MANAGEMENT

- DIN ISO 50001: Energy management systems – Requirements with guidance for use
- DIN EN 16247-1: Describes the requirements for an energy audit that enables small and medium-sized enterprises (SMEs) to improve their energy efficiency and reduce energy consumption.Energy audits – Part 1: General requirements; Possibility for small and medium-sized enterprises (SMEs) as defined by the European Commission Recommendation 2003/361/EC to comply with the requirements of the Electricity and Energy Tax Act for the surplus settlement.

ENERGY EFFICIENCY IN LOW-VOLTAGE SYSTEMS

MEASUREMENT ACCURACY ACCORDING TO IEC 60364-8-1:2019+COR1:2019 / VDE 0100-801:2020-10

IEC 60364-8-1:2019+COR1:2019 / VDE 0100-801:2020-10 "Low voltage electrical installation - Part 8-1: Functional aspects - Energy efficiency" defines, among other things, the required measuring accuracy in low-voltage systems.

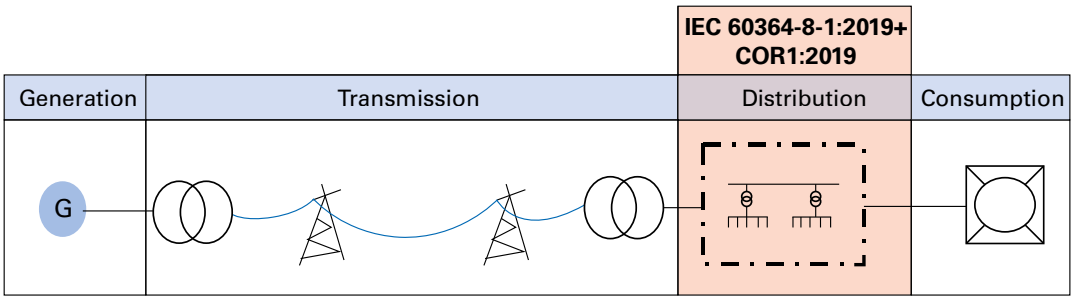

In the context of the construction or retrofitting of a low-voltage switchgear system, this standard combines existing parts of standards and their procedures and criteria with the aim of maximizing energy efficiency. The standard applies to new installations and to annual renovations of old installations estimated to amount to 2-5%.

This part of the standard applies internationally and is derived from the European harmonization directive HD 60364-8-1:2019 as well as the international designation IEC 60364-8-1:2019+COR1:2019.

In Switzerland, the mandatory requirements are set out in the following documents, among others:
– Energy Act (EnG) SR 730.0
– Energy Ordinance (EnV) SR 730.1
– SIA 380/4: Electrical energy in building construction
– SIA 387/4: Electricity in buildings – Lighting
– SIA 2056: Electricity in buildings – Energy and power consumption

The energy efficiency assessment described below, as well as the associated system of points and rating, are to be considered purely informative in the United Kingdom (UK) and Austria.

When designing standard-compliant measurement technology for recording energy data, power quality and other relevant monitoring parameters, the issue of "correct measuring accuracy at the right measurement point" is often the biggest challenge faced in practice. In addition to defining the scope of the measurements, this part of the standard also provides concrete planning specifications.

REQUIREMENTS OVERVIEW FOR POWER MEASUREMENT AND MONITORING

In the table it can be seen that the scope of measurement as well as the measuring accuracy go down from the point of power delivery (PDC) to the final circuits. Thus, a measuring system based on and structured according to the standard has a great impact on the energy efficiency class.

	FEEDER	MAIN DISTRIBUTION	SUB-DISTRIBUTION	DISTRIBUTION FOR FINAL CIRCUITS
Meshes	The total system	Self-contained units (e.g. swimming pool, workshop, office)	Zones and/or applications (e.g. heating of the lobby)	Circuits
Critical range for current accuracy (ratio of expected rated current to actual load current in percent)	Generally medium to high: 30% to 90%	Generally medium: 30 % to 70%	Generally low: 20% to 40%	Generally very low: < 20%
Performance characteristics, required for network management	Consumption measurement and monitoring or analysis of the quality of supply	Consumption measurement and monitoring	Consumption measurement and monitoring	Consumption measurement and monitoring
Performance characteristics (measurements) for cost management	Chargeback measurement Compensation measurement Energy usage measurement and optimization Contract optimization	Cost allocation Energy usage measurement and optimization Efficiency estimate Contract optimization	Cost allocation Energy usage measurement and optimization Efficiency estimate Contract optimization	Energy usage measurement and optimization Energy use forecasts and estimates
Accuracy of the overall system for measuring the active energy management	Accuracy class : ≥ 1	Accuracy class : ≥ 2	Accuracy class ≥ 2	Accuracy class ≥ 2

NOTE: Accuracy classes (also called performance classes) are defined in DIN EN 61557-12.
Source: DIN-VDE 0100-801:2020-10, page 32 Table 2

RESPONSIBILITIES FOR SETTING UP, OPERATING AND MAINTAINING AN ENERGY MANAGEMENT SYSTEM ACCORDING TO IEC 60364-8-1:2019+COR1:2019 / VDE 0100-801:2020-10

ACTION	DETAILS	GENERALLY PERFORMED BY
Energy audit and measure	Analysis of data from installed power measurement and monitoring equipment and/or data from measuring equipment that is not permanently installed	Auditor or energy manager
Specification of the basis	Initial selection of equipment, components with more efficient consumption, initial definition of parameters, etc.	Planner and/or installer
Optimization	HVAC control, lighting control, variable speed drives, automatic power factor correction, etc.	Installer/tenant or user, energy manager
Monitor, maintain power capability	Installation of power measurement and monitoring equipment, operation of monitoring services, and electrical energy efficiency analysis, software, etc.	Energy manager/tenant or user
Control & improve	Inspection, maintenance, etc.	Energy manager/tenant or user

Source: DIN-VDE 0100-801:2020-10, page 39 Table 3

ENERGY EFFICIENCY CLASSES ACCORDING TO IEC 60364-8-1:2019+COR1:2019 / VDE 0100-801:2020-10

The standard's point system provides planners, system installers and operators with a yardstick against which to compare the investments and benefits involved in very different measures.

The evaluation criteria for commercial, industrial and infrastructure settings are the same. Only in the case of residential buildings are there isolated deviations in the criteria of the points considered.

In addition to limit values for the various criteria, the standard's gradations enable scalable evaluation options even if not all criteria are considered in the initial situation or a high evaluation point score is achieved.

It makes a structured analysis and evaluation of the system obligatory. The point system provides transparency concerning the quality of the installation as well as of the measuring system.

Use of this standardized methodology makes it possible to determine how additional initial investments in commercial, industrial, and residential buildings will affect energy consumption and how quickly payback occurs. IEC 60364-8-1:2019+COR1:2019 also directs attention to the life cycle of a system as well as its energy efficiency and continuous availability.

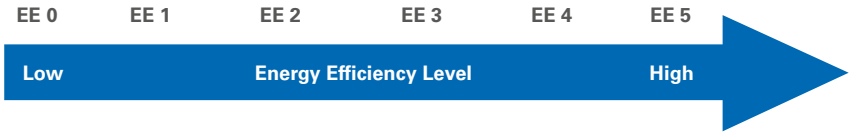

In light of the energy efficiency that is desired, measurement technology is an indispensable focus of the standard: The actual efficiency of the system must be verifiable and transparent.

In addition, measures to increase energy efficiency can only be optimally determined on the basis of adequate, continuously recorded measurement data as well as their analysis and evaluation.

The standard includes 23 evaluation criteria from the categories "Initial Installation," "Energy Management," "Maintenance of the Power Capability," "Performance Monitoring" and a "Bonus" category.

A different number of points can be achieved per criterion. The sum of the points gives the efficiency class of the electrical system: from EE 0, the worst, to EE 5 for systems with the highest efficiency.

The parameters recorded include power factor (cos phi), the efficiency of the transformer(s), the voltage drop, the harmonics content, etc.

These metrics must be recorded and evaluated according to the point system. Aspects such as the number of applications measured, load management coverage, and duration of load disconnection have an impact on the efficiency class of the electrical system.

Example: Evaluation of the energy efficiency of an electrical installation in an industrial building

PARAMETERS	TITLE	STANDARD SUBPOINT	POINTS
INITIAL INSTALLATION			
II 01	Determination of the energy consumption	B.3.2.2.1	6
II 02	Positioning of the main feed and total consumption	B.3.2.2.2	4
II 03	Voltage drop	B.3.2.2.3	6
II 04	Efficiency of the transformer(s)	B.3.2.2.4	2
II 05	Efficiency of permanently installed electrical consumables	B.3.2.2.5	2
ENERGY MANAGEMENT			
EM 01	Zones	B.3.2.3.1	1
EM 02	Applications	B.3.2.3.2	2
EM 03	Load management	B.3.2.3.3	2
EM 04	Meshes	B.3.2.3.4	5
EM 05	Measurement per application	B.3.2.3.5	3
EM 06	Presence detection per zone / room	B.3.2.3.6	4
EM 07	Introduction of an energy management system	B.3.2.3.7	6
EM 08	HVAC control	B.3.2.3.8	4
EM 09	Lighting control	B.3.2.3.9	1
MAINTENANCE OF POWER CAPABILITY			
MA 01	Introduction of a life cycle methodology	B.3.2.4.1	8
MA 02	Frequency of power capability review	B.3.2.4.2	3
MA 03	Data management	B.3.2.4.3	4
MA 04	Power capability of the transformer(s) (operating point)	B.3.2.4.4	1
MA 05	Continuous monitoring of systems with high energy consumption	B.3.2.4.5	0
PERFORMANCE MONITORING			
PM01	Power factor (cos phi)	B.3.2.5.1	4
PM02	Harmonics content	B.3.2.5.2	3
Bonus			
BS 01	Renewable energies	B.3.2.6.2	3
BS02	Energy storage	B.3.2.6.3	2
		Total points	76

Source: DIN-VDE 0100-801:2020-10, page 56 / 57 Table B.2

Detailed information on the allocation and calculation of the above-mentioned points of the individual criteria as well as the associated evaluation parameters and limit values are defined in the standard.

The total number of points in the example above is 76 points.

Overall evaluation of the efficiency class of the electrical system

EFFICIENCY CLASS OF THE ELECTRICAL SYSTEM	TOTAL POINTS			
	FOR RESIDENTIAL PURPOSES	FOR INDUSTRIAL PURPOSES	FOR COMMERCIAL PURPOSES	FOR INFRASTRUCTURAL PURPOSES
Class EE 0	from 0 to 14	from 0 to 19	from 0 to 18	from 0 to 18
Class EE 1	from 15 to 30	from 20 to 38	from 19 to 36	from 19 to 36
Class EE 2	from 31 to 49	from 39 to 63	from 37 to 60	from 37 to 59
Class EE 3	from 50 to 69	from 64 to 88	from 61 to 84	from 60 to 83
Class EE 4	from 70 to 89	from 89 to 113	from 85 to 108	from 84 to 106
Class EE 5	90 or more	114 or more	109 or more	107 or more

Source: DIN-VDE 0100-801:2020-10, page 56 Table B.1

In the previous example of an electrical system in an industrial building, the 76 points awarded result in the energy efficiency class EE3.

If the expected energy efficiency class of the electrical system is not achieved or if individual criteria are changed in the meantime, an energy efficiency action plan must be defined in line with the standard and the process of continuous improvement. Positive changes in terms of improvements are also recorded with the action plan.

Furthermore, the relevant part of the standard defines the measurements for verification of the energy efficiency plan in paragraph "8.3.4.4 Measurement for verification of the energy efficiency action plan" in excerpts as follows:

"The effectiveness of the measures taken under the energy efficiency action plan must be verified. This provides proof of success or evidence of deviations.

For each individual aspect of the energy efficiency action plan, the energy savings achieved in each part of the system or operating equipment, as applicable, must be measured separately or determined by an equally effective method."

Source: DIN-VDE 0100-801:2020-10, page 35/36

MID – MEASURING INSTRUMENTS DIRECTIVE

The abbreviation MID stands for **"Measuring Instruments Directive"** and can be equated with the German term **"Messgeräte-Richtlinie"**. This refers to "Directive 2004/22/EC of the European Parliament and of the Council of 31 March 2004 on measuring instruments".

WHAT IS THE OBJECTIVE OF THE MID?

- EU-wide regulation of market access for the measurement devices concerned
  - Creation of a harmonized European market for measurement devices
  - Uniform approval procedure for all EU states and some other states
  - One-time, uniform test for approval
  - Uniform and transnational regulation for initial validation
- Uniform product identification
- Reduction of validation and testing costs
  - Initial validation is performed by means of a manufacturer's declaration of conformity
  - No separate calibration test or calibration fee
  - Shorter delivery times
- Level playing field due to high product quality requirements
  - Additional requirements for accuracy in the low load range
  - Higher requirements for EMC
  - Better reflection of the current state of measurement technology

WHAT DOES THE MID REGULATE?

The MID concerns 10 types of measurement devices (electricity meters, water meters, gas meters ...) in the field of legal metrology and defines basic as well as measurement device-specific requirements.

The previous initial validation by the weights and measures authority or by a state-approved testing body is replaced by a conformity assessment procedure in which the involvement of a named body selected by the manufacturer is mandatory.

It makes the manufacturer responsible for the initial placing on the market and the initial putting into service within the EU. After that, national law applies.

To do this, the manufacturer must select a conformity assessment procedure specified in the MID by means of which he ensures, under the supervision of a notified body, that the measurement device comply with the MID. Only then may the measurement device covered by the MID be placed on the market or put into service. The meter must be accompanied by a declaration of conformity. This is often printed in the operating manual.

After placing the measurement device on the market or putting it into service, the responsibility for consistently achieving correct measuring results is transferred to the user.

MARKING OF THE DEVICES

The sequence for MID marking is prescribed and must correspond to the following example:

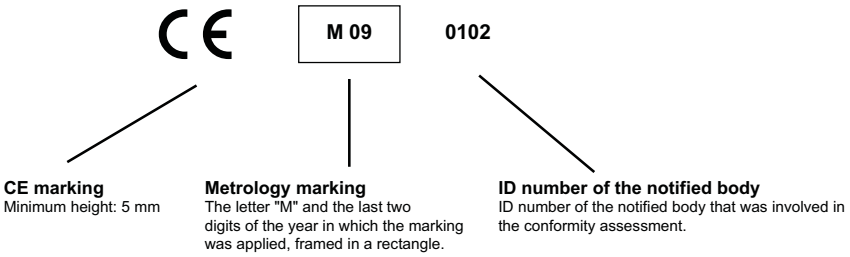

RECALIBRATION?

The MID has no effect on recalibration under calibration law. In Germany, measurement devices whose conformity has been established in a prescribed conformity assessment procedure and which are correctly marked are considered to be initially validated.

The user of the measurement device is still responsible for the timely application for recalibration.

The calibration validity period is specified in the national calibration regulations. In Germany, this is a period of eight years after MID marking for electronic electricity meters.

Further information for Germany can be found at the following link: www.eichamt.de

DEGREE OF PROTECTION TO EN 60529

PROTECTION OF ELECTRICAL OPERATING EQUIPMENT

According to EN 60529, electrical operating equipment (e.g. luminaires, LED modules and operating devices) must have a specific degree of protection depending on its exposure to foreign bodies and water. The degrees of protection are also called IP codes. The abbreviation IP stands for "International Protection" or "Ingress Protection".

THE IP CODE ACCORDING TO EN 60529

The degree of protection provided by an enclosure is verified using standardized test methods. The IP code is used to classify this degree of protection. This consists of the two letters IP and a two-digit code number. The degrees of protection refer exclusively to protection against contact with and ingress of solid foreign bodies and dust (indicated by the first digit of the IP code) and against harmful ingress of water (indicated by the second digit of the IP code). The degree of protection does not say anything about protection against external influences. In addition, the degrees of protection must also not be confused with the electrical protection classes, which refer to protective measures to prevent electric shock.

Important note: In addition to the degree of protection, external influences and conditions must always be taken into account as well.

CODE LETTERS	
IP	International Protection (Ingress Protection)

CODE DIGIT 1	PROTECTION AGAINST FOREIGN BODIES	PROTECTION AGAINST CONTACT
0	No protection	No protection
1	Protected against solid foreign bodies with a diameter from 50 mm	Protected against access with the back of the hand
2	Protected against solid foreign bodies with a diameter from 12.5 mm	Protected against access with a finger
3	Protected against solid foreign bodies with a diameter from 2.5 mm	Protected against access with a tool
4	Protected against solid foreign bodies with a diameter from 1.0 mm	Protected against access with a wire
5	Protected against dust in a harmful quantity	Complete protection against contact
6	Dustproof	Complete protection against contact

CODE DIGIT 2	PROTECTION AGAINST WATER
0	No protection
1	Protected against vertically falling dripping water
2	Protected against falling dripping water when the housing is tilted up to 15°
3	Protected against falling spraying water up to 60° against the vertical
4	Protected against splashing water from all sides
5	Protected against water jets (nozzle) from any angle
6	Protected against powerful water jets
7	Protected against brief immersion
8	Protected against continuous immersion

OVERVOLTAGE CATEGORIES

Electrical distribution systems and consumers are becoming increasingly complex. This also increases the probability of transient overvoltages. Power electronics modules in particular (e.g. frequency converters, leading and trailing phase-angle controls, PWM-controlled power switches) generate temporary voltage peaks in conjunction with inductive loads, which can be considerably higher than the respective nominal voltage. To ensure safety for the user, four overvoltage categories (CAT I to CAT IV) have been defined in DIN VDE 0110 / EN 60664.

The measuring category specifies the permissible areas of application for measuring and testing devices for electrical operating equipment and systems (e.g. voltage testers, multimeters, VDE test devices) for use in the area of low-voltage networks.

DEFINED CATEGORIES AND INTENDED USES IN IEC 61010-1:

THE FOLLOWING CATEGORIES AND INTENDED USES ARE DEFINED IN IEC 61010-1:	
CAT I	Measurements on circuits that do not have a direct connection to the mains (battery operation), e.g. devices of protection class 3 (operation with protective low voltage), battery-operated devices, car electrics
CAT II	Measurement on circuits that have a direct connection to the low-voltage mains by means of a plug, e.g. household appliances, portable electrical appliances
CAT III	Measurements within the building installation (stationary consumers with a non-pluggable connection, distribution connection, permanently installed devices in the distribution board), e.g. sub distribution
CAT IV	Measurements at the source of the low-voltage installation (meter, main connection, primary overcurrent protection), e.g. meter, low-voltage overhead line, house connection box

The categories are also divided into the voltage levels of 300 V / 600 V / 1,000 V.

The category is of particular importance for safety during measurements, since low-impedance circuits have higher short-circuit currents and / or disturbances in the form of load switching and other transient overvoltages must be withstood by the measurement device without endangering the user through electric shocks, fire, sparking or explosion. Due to the low impedance of the public power supply network, short-circuit currents are highest at the house infeed. Within a house system, the maximum short-circuit currents are reduced by the series resistors in the system. Technically, compliance with the category is ensured, among other things, by the contact safety of plugs and sockets, insulation, sufficient air clearance and creepage paths, strain reliefs and kink protection of cables as well as adequate cable cross sections.

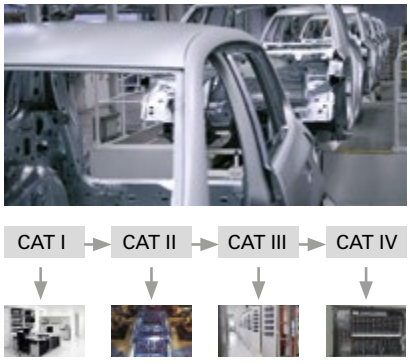

Fig.: Pictorial representation of the CAT categories

FROM PRACTICAL EXPERIENCE

In our estimation and experience, many users are not sufficiently aware of this issue. The question of overvoltage category may have the result for some applications that instead of a UMG 604-PRO rated at 300 V CAT-III, you may have to switch to a UMG 509-PRO with the overvoltage category of 600 V CATIII, i.e. instead of a 4,000 V surge voltage rating, a 50% higher rated surge voltage of 6,000 V is reached. However, it may also result in the relocation of the measurement point. This means additional safety for man and machine!

The combination of the CAT category and the defined voltage level results in the rated surge voltage.

VOLTAGE CONDUCTOR TO NEUTRAL CONDUCTOR, DERIVED FROM NOMINAL ALTERNATING OR NOMINAL DIRECT VOLTAGES UP TO AND INCLUDING	NOMINAL VOLTAGES CURRENTLY IN USE WORLDWIDE				RATED SURGE VOLTAGE FOR OPERATING EQUIPMENT			
	THREE-PHASE 4-CONDUCTOR SYSTEMS WITH GROUNDED NEUTRAL CONDUCTOR	THREE-PHASE 3-CONDUCTOR SYSTEMS, UNGROUNDED	SINGLE-PHASE 2-CONDUCTOR SYSTEMS, ALTERNATING OR DIRECT VOLTAGE	SINGLE-PHASE 3-CONDUCTOR SYSTEMS, ALTERNATING OR DIRECT VOLTAGE	OVERVOLTAGE CATEGORIES			
V	V	V	V	V	I	II	III	IV
150	120 / 208* 127 / 220	115, 120, 127	100** 110, 220	100 – 200** 101 – 220 120 – 240	800	1,500	2,500	4,000
300	220 / 380, 230 / 400 240 / 415, 260 / 440 277 / 480	200**, 220, 230, 240, 260, 277, 347, 380, 400, 415, 440	220	220 – 400	1,500	2,500	4,000	6,000
600	347 / 600, 380 / 660 400 / 690, 417 / 720	500	480	480 – 960	2,500	4,000	6,000	8,000

** Customary in the United States of America and Canada.*
*** Customary in Japan.*

HIGH AVAILABILITY THROUGH 3-IN-1 MONITORING

Whereas years ago a momentary voltage dip caused just a flicker in the lighting, today it can paralyze entire businesses. That is why close monitoring is essential. The disturbances can also be home-made – in the literal sense of the word. In the best case, defects can even be detected and eliminated as they arise. There is no need for the user to work with a variety of instruments to monitor the entire infrastructure. A single modern monitoring system can do this conveniently and reliably.

Highly automated manufacturing plants, data centers but also plants with continuous processes (e.g. food, cable factories, paper production) require a reliable power supply – often even high availability, i.e. an availability of at least 99.9%. The many servers, monitors, storage media and network components now in use can tolerate almost no voltage dips or other power quality deviations from the standard (e.g. EN 50160). However, electrical energy must be available "cleanly" and reliably not only for information and communications technology, but also for infrastructure applications, such as climate control, fire prevention, EMC, safety technology, lighting, elevators and drives.

3-IN-1 MONITORING FOR SAFETY AND EFFICIENCY

It is not surprising that in all these applications, the demand for a reliable power supply is even more important than the ubiquitous question of energy efficiency. Continuous monitoring with appropriately integrated measurement technology for energy management, power quality and residual current monitoring accommodates this, because it serves both objectives. At the same time, residual current monitoring improves preventive fire protection. However, in practice, collecting, evaluating and documenting all of the measurement data is a complex task. It must also all be done very quickly if, for example, an insulation fault that is just developing is to be detected before the system fails.

This is why Janitza, as a specialist for digital measurement technology and monitoring systems in the field of power supply, has developed its new series UMG 512-PRO, UMG 96RM-E and UMG 20CM for monitoring on 3 levels (see the section "Monitoring solutions in practice"). Together with the GridVis® software and the integrated alarm management, these series combine solutions for three areas in a shared system environment with only one measurement device per measurement point:

3-in-1 monitoring

- Energy management according to ISO 50001 (recording of V, A, Hz, kWh, kW, kVArh, kvar, ...)
- Power quality monitoring (harmonics, flicker, voltage dips, transients, ...)
- Residual current monitoring (RCM)

The bundling of these three different functions in a single measurement device offers the great advantage that assembly and installation as well as the rest of the infrastructure (current transformers, communication lines and facilities, database, software, analysis tools and reporting software ...) are needed only once. Furthermore, all data is centrally recorded in a database and can be conveniently processed with only one software program. This not only saves direct costs in purchasing, but also simplifies integration: There is no need for interfaces between different systems – after all, it's just one system. This also reduces the effort required for training measures and familiarization, which in turn increases acceptance among the responsible electrical specialists.

NOTIFICATION BEFORE FAILURE

A significant advantage of this integrated data acquisition is its speed and the comprehensive overview of all data it affords. This makes it possible to detect disturbances that a single system would only perceive in part or not at all. This allows the user to respond before fuses or residual current devices (RCDs) shut down affected systems or socket power circuits. This applies in particular to gradually rising residual currents (e.g. caused by insulation faults), excessive operating currents or other overloads of system parts or consumers (Fig. 1).



Fig. 1: Alert before switching off – An objective of residual current monitoring

Another source of faults are massive grid distortions or resonance phenomena caused by a growing number of non-linear electrical loads. If irregular network variables such as excessive harmonics or residual currents are detected in good time, repair measures can be initiated before a device fails, thus avoiding or at least allowing planning or a reduction of downtime.

RCM, THE UNIVERSAL TOOL: GREATER SAFETY, HIGHER SYSTEM AVAILABILITY, LOWER FIRE HAZARD

As mentioned above, RCM is playing an increasingly important role for highly available power supplies, which can now be found in almost all market segments. Especially continuous processes and particularly sensitive applications such as data centers, hospitals or semiconductor factories rely on RCM. RCM measurement also offers a good alternative wherever insulation resistance measurements and residual current devices cannot be implemented due to local or operational conditions. The "predictive" monitoring described also helps to reduce alarms, as required for alarm management in accordance with EEMUA 191 or NAMUR NA 102, for example.

But RCM can do even more, namely reduce the risk of fire! A residual current triggered by defective insulation can be insidious. The current level is determined by the power of the feeding network, the insulation fault resistance and the grounding resistance. If the current flow is sufficiently high (in the case of a saturated ground fault or a correspondingly low-resistance short-circuit), the upstream protective device will disconnect the electrical consumer from the mains. However, if the residual current is too small, the protective device will not trip. If the induced error power exceeds a value of approx. 60 watts (approx. 261 mA at 230 V), there is risk of fire. Residual current monitoring thus also serves to prevent fires. The next section shows how RCM works in detail.

RCM – HOW IT WORKS

The basic operation of the residual current principle is shown in Fig. 2. The phase and the neutral conductor of the feeder to be protected are led through the summation current transformer, while the protective conductor is excluded. For a better overview, the figure shows a highly simplified circuit. In practice, all three phases and the neutral conductor run through the summation current transformer. When the system is in the fault-free state, the summation current is zero or close to zero (within the tolerance range), so that the current induced in the secondary circuit is also zero or close to zero. If, on the other hand, a residual current flows to ground in the event of a fault, the current imbalance causes a current in the secondary circuit which is detected and evaluated by the RCM measurement device (Fig. 3).

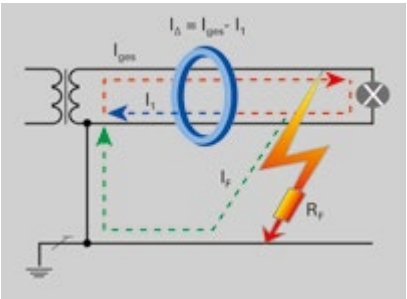

Fig. 2: Principle of residual current measurement

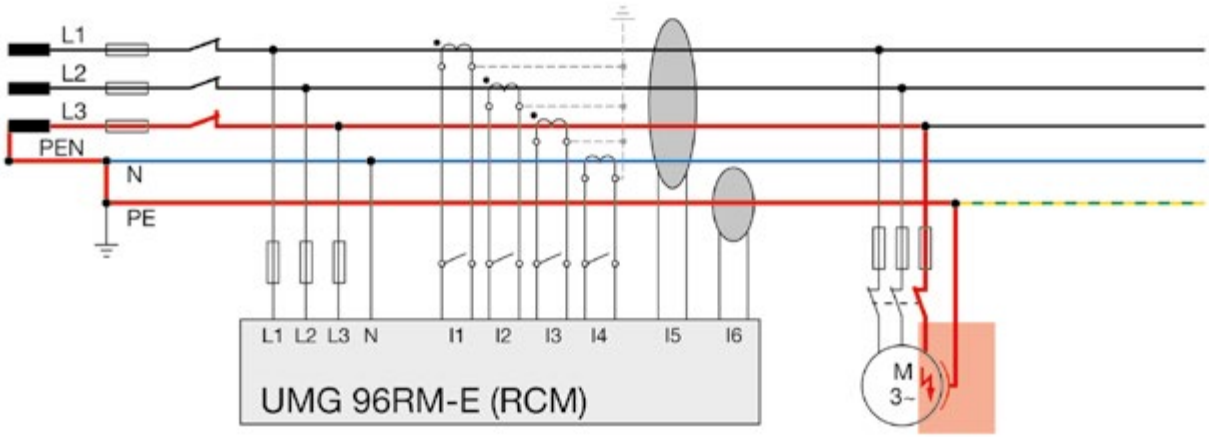

Fig. 3: Faulty motor insulation leads to a ground fault and fault current to the PE conductor

Modern RCM devices allow different limit value settings (Fig. 4). A static limit value has the disadvantage that it is either too large at partial load or too small at full load, i.e. there is either insufficient protection or false alarms occur, which can have a negative effect on the attention of the monitoring personnel in the long term. For this reason, it is recommended to use RCM measurement devices with dynamic limit value adaptation. In this case, the residual current limit value is specified on the basis of the current load conditions and is thus optimally adapted to the load in question (Fig. 5).

By parametrizing (i.e. defining the typical residual current in the "GOOD" state) the system while it is new and using continuous monitoring, all changes in the system state from the time of commissioning can be detected. This can also be used to detect creeping residual currents.

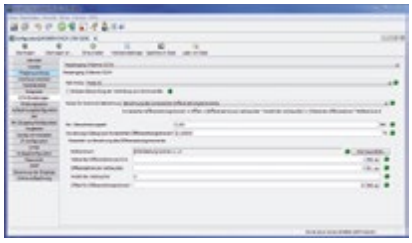

Fig. 4: Extensive configuration options for RCM limit value formation (e.g. dynamic limit value formation) in the GridVis® software

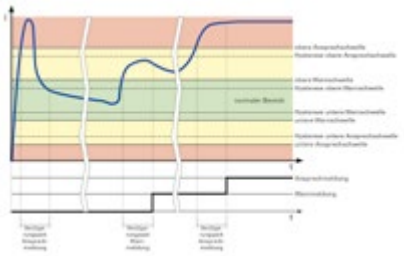

Fig. 5: Parameters of residual and operating current monitoring

NEW TECHNOLOGY, NEW SOURCES OF ERROR

An example of "modern sources of error" are collapsing polypropylene phase shift capacitors. These are used to compensate for reactive currents, such as those that can be caused by three-phase motors. Paradoxically, a fault thus arises from a facility that is actually intended to improve the energy supply. With these capacitors, overload or overtemperature often causes the PP windings to melt. The melted material then causes a high-impedance ground fault. Such ground faults cannot be disconnected by conventional protective measures (HRC fuse, circuit breaker). The continuous residual current usually leads to a saturated short-circuit in the medium term and can then represent a significant fire or safety hazard under certain circumstances (Fig. 6). Residual current measurement detects such faults and allows rapid countermeasures. This helps avoid costly and dangerous equipment failures.

Errors often occur already during installation, such as impermissible connections between the N and PE conductors. Sometimes the two are simply reversed. Figure 7 shows a typical connection error, which can easily result in a residual current of 5000 mA. With RCM, such errors are immediately detected during the installation phase and reported via the alarm management system.



Fig. 6: Destroyed PP reactive power compensation capacitor: A creeping high-impedance ground fault has led to the complete melting of the capacitor and a localized fire.

Another, rather novel source of errors is a large number of single-phase loads, such as the switching power supplies of servers in data centers or PCs in office buildings. They cause a high proportion of 3rd harmonics. These harmonic components have the major disadvantage that they are superimposed on the neutral conductor instead of being canceled out by the transformer windings. This can result in N conductor overloads. Integrated measurement devices, such as the UMG 96RM-E, allow comprehensive monitoring of all phases and can thus report excessive neutral conductor currents in good time.



Fig. 7: Here N and PE have been reversed

In this context, the safety regulations of the VdS association of insurers (Verband der Sachversicherer) for electrical installations up to 1000 volts should also be mentioned:

"VdS 2046 : 2010-06 (11)
3.2.4 In order to increase safety in electrical systems in which numerous non-linear consumer devices are operated (such as frequency converters, controls by means of phase angles, e.g. in lighting systems), the current in the neutral conductor must be measured regularly, e.g. once a year, but also after significant changes in the electrical system or in the type and number of electrical consumers. If the safety of the installation is endangered by excessive harmonic currents, measures must be taken to protect against harmonics in accordance with the publication "Low-interference electrical installation" (VdS 2349)."

THE CHALLENGE OF HIGH AVAILABILITY

EDP technology in itself already places high demands on power supplies. Especially critical, however, are applications in which data loss simply must not occur. BITKOM, for example, writes as follows in its guide "Operationally Secure Data Centers": "Data centers pose the highest availability requirements. Accordingly, the energy supply must be ensured on a sustainable basis. It is almost self-evident that the power supply of the data center itself and all areas in the same building to which data cables run must be designed as a TN-S system. "An absolute necessity for safe operation is the continuous self-monitoring of a "clean" TN-S system and the connection of the messages to a permanently manned point, e.g. to the control center. The electrically qualified person can thus recognize the need for action due to corresponding messages and prevent damage by taking specific service measures."

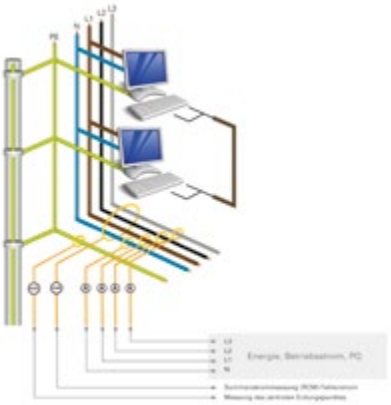

Fig. 8: Continuous 3-in-1 monitoring (EnMs-RCM-PQ) of an EMC-optimized TN-S system

The Janitza solution allows realization of the safety criterion "RCM, residual current monitoring" of an EMC-optimized TN-S system of this nature (Figure 8).

REDUCE INSPECTION COSTS WITH RCM

Periodic inspections, such as those required by BGV A3 – Electrical Installations and Equipment, are time-consuming and therefore expensive. RCM monitoring systems can reduce these inspection costs while still providing increased safety. Stationary electrical systems and equipment are considered to be permanently monitored if they are continuously maintained by electrically qualified persons and tested by means of metrological measures during operation (e.g. monitoring of insulation resistance). Continuous RCM measurement enables monitoring systems to ensure the required continuous testing. It is particularly worth mentioning that RCM makes the cost-intensive measurement of insulation resistances at least partially superfluous, and continuous testing of the insulation properties takes place. For conventional insulation measurement, the fixed installation or consumer must be switched off and the neutral conductor disconnected. In addition, there is a risk that sensitive electronic components may be damaged by the high test voltage of the insulation measurement. The test severity and scope can be reduced by continuous monitoring. However, this must be defined on an application-specific basis. Agreements with the operator, if necessary also experts and/or the employers' liability insurance association are mandatory for this!

It should be explicitly mentioned at this point that the following work must be carried out despite continuous RCM measurement:

- Visual inspection for externally visible defects
- Protective measures and shutdown conditions
- Loop resistances and continuity testing of protective conductors
- Functional test

THE VDS ASSOCIATION OF INSURERS REQUIRES RCM

The VdS comments on the subject of harmonics / installation of the power supply system as follows:

"In power supply systems with PEN conductors, operational currents which can cause damage flow in the entire grounding and equipotential bonding system (see section 3.3). For new electrical systems that are to be installed, TN systems should therefore be planned as TN-S systems. For existing TN-C systems, conversion to a TN-S system is recommended. TN-S systems are to be implemented starting from the feeder (transfer point), if possible.

In order to ensure the functionality of a TN-S system in the long term (no conductor short-circuit between N and PE conductors, no reversing of N and PE conductors), it must be monitored by a residual current monitoring device (RCM).

When the set response value is reached, a perceptible visual and audible error message must be given so that the defects can be rectified immediately. For the message to be successful, it should be posted to a manned location as needed. If this type of connection is waived, a forced disconnection of the faulty circuit is mandatory ..."

Elsewhere, in the safety regulations for electrical installations up to 1000 volts, the VdS prescribes:

"VdS 2046 : 2010-06 (11)
3.2 Maintaining proper condition
3.2.3 In order to ensure safety in electrical installations in the long term, if insulation resistance measurements cannot be carried out due to local or operational circumstances, substitute measures must be taken. Such measures are described in the publication "Protection in the case of insulation faults" (VdS 2349)."

An adequate substitute measure here is permanent RCM monitoring!

ENERGY MEASUREMENT AND STANDARD ELECTRICAL PARAMETERS

RCM plays a dominant role in installation monitoring using the Janitza system. Nevertheless, other points should not remain unmentioned: In addition to a secure energy supply, energy efficiency is playing an increasingly important role. A milestone was created in this respect with the adoption of the ISO 50001 standard. ISO 50001 is the normative basis for the introduction of an energy management system – whereby the focus here is on the term management system. Following other management systems such as ISO 9001 or ISO 14001, this is a methodology for setting goals, implementing them systematically, and eliminating the factor of chance as far as possible. The term "goal" here is to be understood more in terms of "the means is the goal". The resolution of the Council of IT Commissioners of February 2013 can be cited as an example of this: (Page 2, Resolution No. 2013/2, Point 2)

"The IT Council continues to strive for a high percentage of continuous measurement by the end of 2013 and asks departments to continue to promote the use of permanent measurement devices, taking into account the principle of cost-effectiveness." With its broad selection of UMG measurement devices and electricity meters, Janitza makes it possible to acquire and record standard electrical parameters as well as power and energy consumption data (Fig. 9).



Fig. 9: The "3-in-1" measurement device from Janitza: UMG 512-PRO

POWER QUALITY MONITORING

RCM and the requirements of Bitkom and the VdS association of insurers were covered in the first two parts. The last point of 3-in-1 monitoring is power quality. Reliable operation of modern plants and systems always requires high supply reliability and good power quality. But in modern power supplies, from industrial networks to office buildings, a wide range of single- and three-phase, non-linear loads are used. This includes lighting technology, such as light controllers for spotlights or energy-saving lamps, numerous frequency converters for heating, air-conditioning and ventilation systems, frequency converters for automation technology or elevators, as well as the entire IT infrastructure with the regulated switching power supplies typically employed. In many places today, you can also find inverters for photovoltaic (PV) systems and uninterruptible power supplies (UPS).

All these non-linear electrical loads cause greater or smaller grid distortions which impact the originally "clean" sinusoidal shape. This also distorts the current and voltage waveforms accordingly (Figure 10, and Figure 11).

The burden placed on the grid infrastructure caused by the described electrical and electronic loads with grid distortions has increased significantly in recent years. Depending on the type of generation plant and operating equipment (grid feeder with converter, generator), grid stiffness at the connection point and the relative size of the non-linear loads, different grid distortions and influences can occur. For secured power supplies in data centers, the power quality must comply with EN 61000-2-4 (Class 1).
With a wide range of UMG measurement devices, Janitza makes it possible to record and analyze the various power quality parameters. Standardized power quality reports in the GridVis® software (e.g. for EN 50160, EN 61000-2-4 and ITIC: "CBEMA curve") allow reports for common standards to be generated virtually at the push of a button.

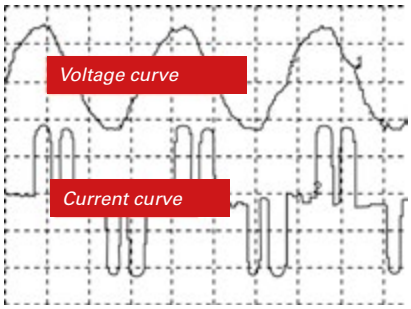

Fig. 10: Grid distortions through frequency converters

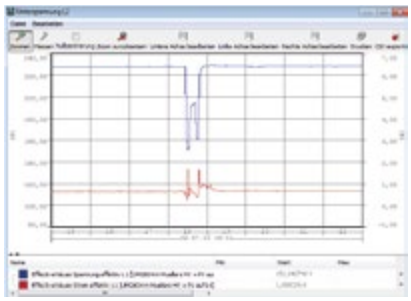

Fig. 11: Critical voltage dip with production standstill

MONITORING SOLUTIONS IN PRACTICE

The goal of 3-in-1 monitoring solutions is integrated measurement of energy, power quality and RCM and requires the measurement of all conductors (L1, L2, L3, N) + CGP (Central Grounding Point) + RCM with a single measurement device.

A powerful measurement device with 6 measured current inputs for 3-in-1 measurement is the UMG 96RM-E for intermediate distribution boards, or for main nodes and CGP, the UMG 512-PRO from Janitza. The IP-based measurement devices can be easily integrated into existing communication networks via Ethernet. Numerous IP protocols, the onboard homepage and the SNMP protocol facilitate the work of administrators.

Special residual current transformers with practical special designs also allow cost-effective retrofitting in existing systems without having to switch off electrical consumers.

ALARMS IN THE RIGHT PLACE

Alarms must not go unheard. An acoustic signal from the switchboard cabinet in the low-voltage HRC distribution is of little use to those in the control room. Integration of the RCM measurement devices in the GridVis® software with its extensive alarm management reporting options ensures that messages quickly reach the right recipient. With any desired escalation level and a logbook function, the monitoring control center has all the tools it needs for efficient monitoring. This enables the responsible electrically qualified person to detect and evaluate any increases in residual current as quickly as possible and initiate maintenance measures as needed.

VAGRANT CURRENTS DISTURB THE EMC

Connections between N and PE conductors lead to "vagrant" operating currents being distributed via the PE system, data lines and all metal parts of the building. Because these currents are not balanced, they generate electromagnetic fields. The consequences are many types of disturbances in the electrical systems, EDP networks and piping systems of the building installation. Figure 12 illustrates how the operating current is divided at the PEN bridge and can flow back over several paths, meaning that the sum of the supply and return current is no longer 0. This can cause the following disturbances:

- Changes in the operating behavior of frequency-dependent components (e.g. capacitors consume more current)
- Disturbances of data transmissions due to magnetic and inductive influences
- Transmission of lightning influences into the electrical system
- Corrosion on metallic pipes
- Influence on persons

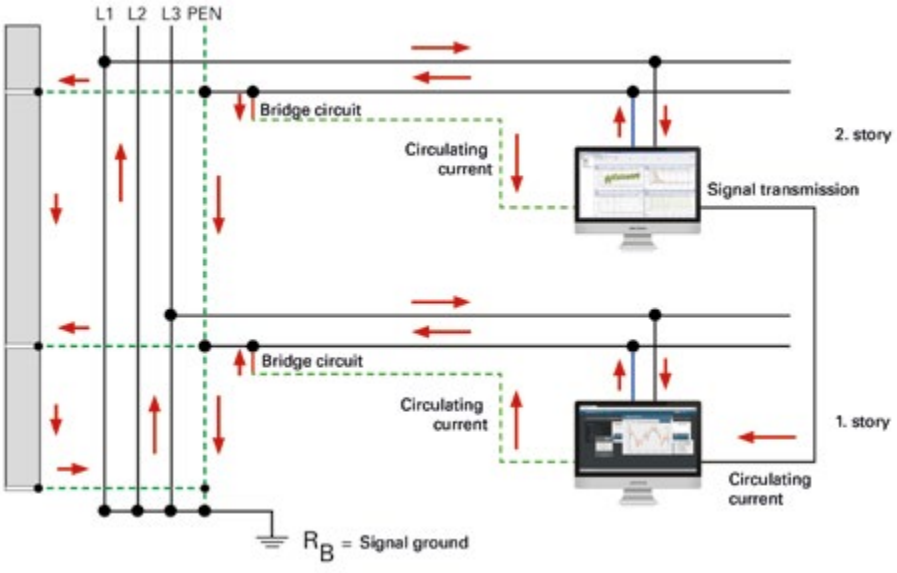

Fig. 12: Operating currents on grounding systems

Supply and return conductors, including in distributions, should be arranged close together to minimize magnetic fields. At each node of a circuit, the sum of the currents must be zero to avoid residual currents. In addition, the sub distribution or the circuit should be monitored with an RCM. The UMG 96RM-E is very well suited for monitoring subdistribution panels or larger consumers.

Individual circuits in which residual current circuit breakers cannot be used for operational reasons can also be monitored. A reporting RCM in combination with on-site specialist personnel creates maximum, alternative safety.

NEUTRAL CONDUCTOR AND CGP

The neutral conductor (operating current return conductor) today has become the most important conductor. It must be treated like a phase conductor. To keep the grounding system "clean", the current-carrying N conductor must be placed far from the PE conductor. There must be no galvanic operating currents flowing via the grounding system, as these would cause inductive coupling. These measures must be taken all the way to the feeding source.

In the TN-S system, the N conductor must be connected to the grounding system only once, at the so-called CGP (central grounding point from N to PE), at a suitable point and this must be monitored. Undesirable insulation faults or galvanic connections between N and PE are immediately detected by monitoring the CGP. Deviations are reported in a timely manner and time dependencies are analyzed.

Whether the TN-S system is functioning without errors can be checked with the UMG 512-PRO, for example. It allows a broad overview of power quality and EMC. This means even the initiation phase of a ground fault can be recorded and analyzed. The phase current then increases in parallel with the CGP current. The current at the CGP must always be considered in relation to the total power of the TN-S system. This means that, on the one hand, operational leakage currents are tolerated, but abnormal deviations at the CGP are reported by the RCM.

SUMMARY AND OUTLOOK

Increasingly high demands are being placed on future power supplies because power failures cause high costs and immense aggravation! Continuous RCM monitoring to safeguard highly available power supplies with high EMC requirements, but also for preventive fire protection, is gaining increasing acceptance. The goal here is RCM monitoring of the power supply at all four levels (feeder [PCC], main distributions [transformer feeders], subdistribution panels, individual loads [e.g. server cabinets]).

ENERGY (DATA) MANAGEMENT

WHY ISO 50001 IS NOT EVERYTHING

Again and again we are confronted with the question: "You do sell energy management systems, don't you?!" The answer, which is always the same, is: "Yes and no." Our product portfolio includes components, software and solutions for the collection and analysis of energy-related data and thus provides the basis for a number of possible tasks and objectives, and thus also for an energy management system.

ISO 50001

ISO 50001 is the normative basis for the introduction of an energy management system. The focus here is on the term management system. Following other management systems such as ISO 9001 or ISO 14001, this is a methodology for setting goals, implementing them systematically, and eliminating the factor of chance as far as possible. Here, the term "goal" is to be understood more in terms of "the means is the goal".

The PDCA or Plan-Do-Check-Act system pursues a CIP (continuous improvement process) that gradually examines processes and procedures for their optimization potential and defines measures and responsibilities as well as the resources and time periods required for this. ISO 50001 is similar in structure to ISO 9001 or even ISO 14001 and can therefore be easily integrated into existing management systems, which significantly simplifies the effort required for implementation.

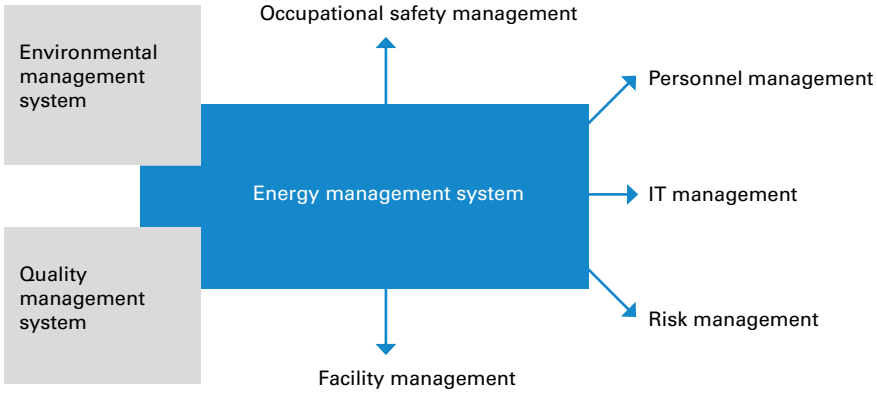

The word "check" contained in the PDCA procedure also immediately indicates its relevance for the topic of measurement data acquisition and evaluation, or put differently: energy data management. Without measurement, no target/actual comparison, no benchmark is possible. Although ISO 50001 does not contain any clear specifications regarding the scope and frequency of energy measurements, practical experience shows that without a minimum of measurement technology for continuous recording – at least for all major consumers – potentials can only be ascertained to a limited extent and savings targets can therefore not be achieved comprehensively enough. Customers who have achieved their certification with a minimum of measurement effort recognize the benefit of more extensive measurement across as many consumers as possible during the ongoing PDCA process.

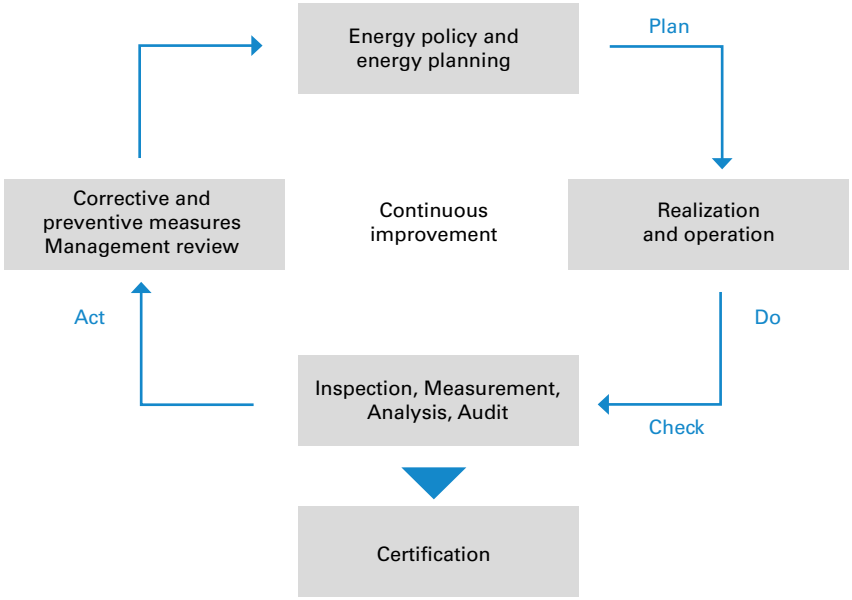

Our measuring systems are scalable and grow with the customer's requirements. Existing structures can be adopted just as, conversely, our measurement devices can be integrated into existing systems.

Frequently, in connection with the introduction of ISO 50001, questions are asked about the validation and subsequent calibration of the measurement devices. The standard prescribes neither. Measurement devices in the form of calibrated meters are not prescribed, nor is recalibration of the measurement devices at regular intervals. This would, in fact, involve an unreasonable amount of work, since digital measurement devices cannot typically be calibrated when in the installed state.

The company to be certified must only ensure the comparability of the measurements in the different periods and document the verification, by whatever means. For our universal measurement devices, this means that when used as intended (ambient temperature!), the measuring accuracy after years is still greater than that of conventional meters in their as delivered condition. For practical purposes, we

recommend a random comparison or parallel measurement of the power and work values with a high-quality measurement device such as our MRG 605 or MRG 511 measuring case via the current transformer measuring terminal strips we offer.

For information on this topic in Germany and how to apply, please contact the Federal Office for Economic Affairs and Export Control: www.bafa.de/bafa/en/indexhtml

Who actually needs ISO 50001?

(German legal situation in 2013)

EEG apportionment Sec. 40 ff – EEG apportionment reduction

Under certain conditions, companies are entitled to apply for a reduction of the EEG apportionment:

- The company must be part of the manufacturing industry
- The share of electricity costs must be at least 14% of gross value added
- The annual consumption must be at least 1 GWh per site
- **As of an annual consumption of 10 GWh, certification according to ISO 50001 is required to obtain the reduction**

The regulation is intended to ensure the international competitiveness of energy-intensive companies. Due to the increase in the share of renewable energy producers, the EEG apportionment will probably continue to rise sharply, which would indeed put energy-intensive companies at a significant competitive disadvantage. Despite all the half-truths spread in the media on this subject, practice shows that the lion's share of all companies that have applied for and received approval for the EEG reduction do actually belong to the sector of energy-intensive companies and are in international competition. A much larger proportion of companies with high electricity consumption of > 1 GWh per year are already disqualified due to the 14% value-added hurdle during the approval process.

ELECTRICITY TAX ACT SEC. 10 – SURPLUS SETTLEMENT

Under certain conditions, companies in the manufacturing sector can benefit from what is known as the surplus settlement under Section 10 of the Electricity Tax Act (StromStG). In this context, the tax burden remaining after application of Sec. 9b StromStG can be waived or refunded to the company. This "relief in special cases" (i.e. surplus settlement) is only granted to the extent that the tax burden exceeds € 1,000 in a calendar year (excess/base amount). The amount of relief depends on the difference between the electricity tax which exceeds the base amount, and the (fictional) relief resulting from the fact that pension insurance contributions have fallen since the introduction of the electricity tax (in the case of general pension insurance, from 20.3% before the introduction of the electricity tax to currently 18.9%; with an employer contribution of 50%, this meant a reduction of 0.7% for employers in 2013; the "difference"). A maximum

of 90% of this difference is waived as relief, refunded or credited. This calculation formula results in companies with high electricity consumption and few employees (subject to pension insurance) benefiting in particular from the surplus settlement.

Since 2013, proof of an ISO 50001-certified energy management system has been required for large companies to obtain the surplus settlement. For small and medium-sized enterprises (SMEs), an energy audit in accordance with DIN EN 16247-1 is sufficient.

Applications and information can be obtained from the responsible main customs offices: www.zoll.de/EN/Home/home_node.html

FROM PRACTICAL EXPERIENCE:

Managing Director F. to Operations Manager A.: "How much electricity do we actually use?" Operations Manager A.: "Not entirely sure, but definitely a lot!" Managing Director F.: "Make sure that changes!" Operations Manager A. to plant electrician M.: "We need to reduce our electricity costs. Take care of it." One year later. Managing Director F. to Operations Manager A.: "The electricity costs are as just as high as ever. How can that be?" Operations Manager A.: "I'll have to ask M." Operations Manager A. to plant electrician M.: "We're still paying insane electricity bills. How can that be? I told you you needed to take care of that!" Plant electrician M.: "Yeah, boss, but the controller canceled the money for new drives, then my colleague was sick for four weeks and, as you know, day-to-day business is really hectic, the phone rings all the time and everyone wants something from you!"

... with ISO 50001 this would not have happened!

WHO ELSE NEEDS AN ENERGY MANAGEMENT SYSTEM (ENMS)?

Basically, every company with a certain energy consumption and a large number of different consumers and processes can benefit from the introduction of an

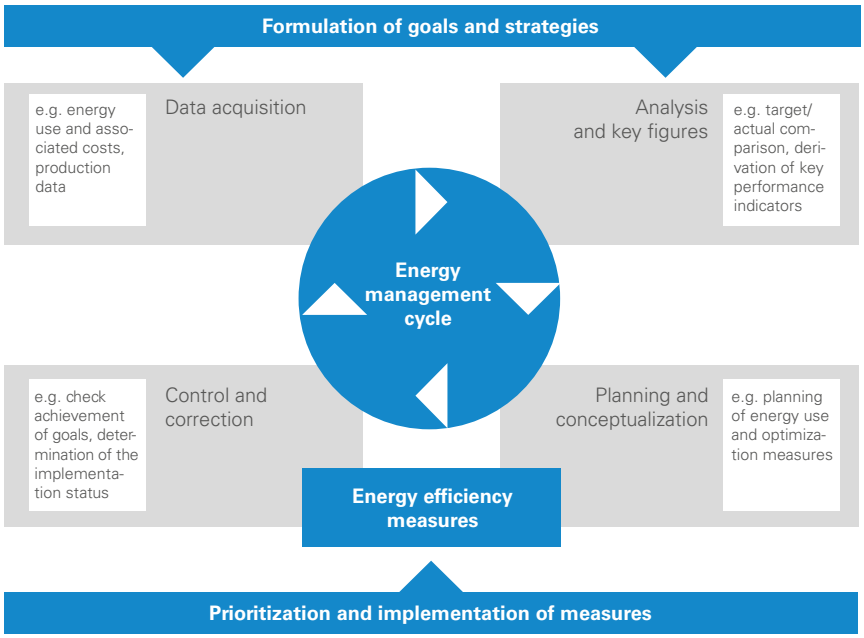

Energy management represents a closed control loop with the objective of continuous improvement.

energy management system according to ISO 50001. The underlying system ensures sustainable, targeted measures to reduce energy costs. In addition, an EnMS in accordance with ISO 50001 will also gain in importance in the future as a marketing tool for presenting a green and environmentally conscious corporate philosophy.

Now, it must be conceded to companies which operate professionally that a certified management system does not necessarily have to be established in the company in order to sustainably reduce energy costs. In addition, there are countless companies that lack the legal prerequisites for EEG apportionment reduction or the surplus settlement and for whom ISO 50001 is therefor not a mandatory issue. Nevertheless, energy costs are high.
Those who create the necessary transparency with an energy data management system from Janitza are laying the foundation for sustainable, energy-conscious economic management.

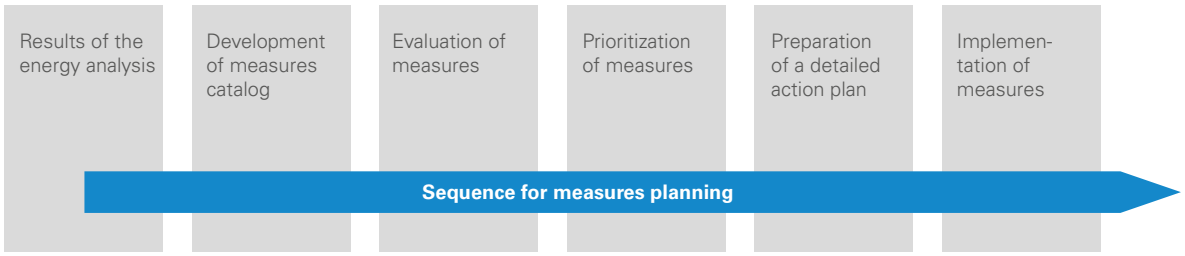

PEAK LOAD MANAGEMENT AND NETWORK CHARGES

Another important aspect of cost reduction, which can also be pursued with an energy data management system, is the control and reduction of peak loads. Electric utilities calculate network charges based on a highest load measured within a quarter of an hour. This value may then remain valid for the entire billing year. However, it could be that this value simply arose arbitrarily or by chance. Frequently, the actual "troublemakers" causing peak loads cannot be identified at first glance.

Only those who create transparency in the load profiles of their main consumers have the opportunity to actively counteract this. This can be done by selectively switching off consumers, by connecting the company's own generators or, where this is not possible from a process engineering point of view, by means of time-delayed switch-on processes or down-regulation of non-essential process operations.

Another, but often unknown, aspect is that, according to Section 19 (1) StromNEV – Special Forms of Network Usage, utilities must offer their customers a discounted monthly demand rate if, due to special circumstances, the peak load that was measured once is significantly higher than what is normal for the company.

A good overview of all subjects pertaining to ISO 50001, energy efficiency and subsidy opportunities for the German market can be found on the following Internet pages:

Federal Office for Economic Affairs and Export Control: http://www.bafa.de/EN/Home/home_node.html

At the main customs offices:
www.zoll.de/EN/Home/home_node.html

DENA – German Energy Agency:
www.dena.de/en.html

The DENA list of certified energy consultants:
www.energie-effizienz-experten.de

Credit institute for reconstruction:
www.kfw.de

LOAD MANAGEMENT AND OPTIMIZATION OF MANUFACTURING PROCESSES

It is not only the peak load that increases electricity costs. Studies in large manufacturing plants have shown that, depending on the process, electricity consumption amounting to several gigawatt hours per site is sometimes generated annually during shift-free periods and idle phases alone! A fine-meshed network of measurement points within the production structures in conjunction with modern PLC controllers and production control systems enables automated optimization in realtime and in high quality. Janitza encoders are ideally suited for this task due to their open communication interfaces, high sampling rate and measuring accuracy.

LOAD MANAGEMENT AND PURCHASING ELECTRICITY

Any one who knows their load profiles and buys electricity on the spot market can of course do so with pinpoint accuracy and a precise knowledge of their volatile demand based on the load profiles.

SUBSIDIES AND PUBLIC FUNDS

The government provides extensive assistance for the implementation of measures and for investment in equipment and operating resources to increase energy efficiency. From low-interest loans to actual investment subsidies and covering the costs for (sometimes mandatory) certified energy consultants. The list is long, and the offers are constantly changing.

A comprehensive overview of all subsidy measures:

www.foerderdatenbank.de
Federal Ministry for the Environment, Nature Conservation and Nuclear Safety:
www.bmu.de/energieeffizienz

NRW energy agency:
www.energie-im-unternehmen.de
IHK, TÜV and DEKRA on their country-specific websites

OVERVIEW OF POWER QUALITY PARAMETERS

In modern power supplies, ranging from industrial networks to office buildings, a wide range of single- and three-phase, non-linear loads are used. This includes lighting technology, such as light controllers for spotlights or energy-saving lamps, numerous frequency converters for heating, air-conditioning and ventilation systems, frequency converters for automation technology or elevators, as well as the entire IT infrastructure with the regulated switching power supplies typically employed. In many places today, you can also find inverters for photovoltaic (PV) systems and uninterruptible power supplies (UPS). All these non-linear electrical loads cause greater or smaller grid distortions which impact the originally "clean" sinusoidal shape. This also distorts the current and voltage waveforms accordingly.

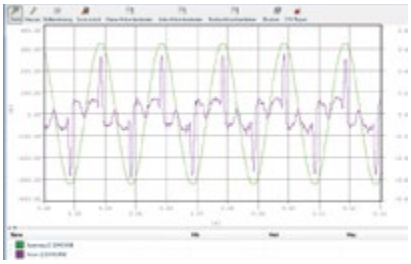

Fig.: Distorted current shape due to consumer electronics

Reliable operation of modern plants and systems always requires high supply reliability and good power quality.

The burden placed on the grid infrastructure caused by electrical and electronic loads with grid distortions has increased significantly in recent years. Depending on the type of generation plant and operating equipment (grid feeder with converter, generator), grid stiffness at the connection point and the relative size of the non-linear loads, different grid distortions and influences occur.

The following power quality parameters must be given special attention:

- Harmonics current
- Current and voltage unbalance
- Rapid voltage changes – transients
- Voltage dips and momentary overvoltages
- Voltage interruptions (MIs – momentary interruptions)
- Flicker
- Phase shift and reactive power

HARMONICS CURRENT

The ever-increasing number of non-linear loads in our power grids is causing increasing "grid pollution". This is also referred to as grid distortion, and is similar to the pollution that is familiar in terms of the environment with respect to water and air. Ideally, generators produce a purely sinusoidal current at the output terminals. This sinusoidal voltage waveform is considered the ideal AC voltage waveform, and any deviation from it is called a grid disturbance.

More and more consumers are drawing non-sinusoidal current from the grid. The FFT Fast Fourier Transform of these "polluted" current waveforms yields a wide range of harmonic frequencies – commonly referred to as harmonics current.

Harmonics current is harmful, sometimes even dangerous, for electrical networks, and connected consumers suffer from it, similar to the way in which polluted water is unhealthy for our human body. This results in overload, reduced service life and possibly even early failures of electrical and electronic consumers.

Harmonic loads are the main cause of invisible power quality problems involving enormous costs for servicing and investments for the replacement of defective equipment. Unacceptably high grid distortions and the resulting poor power quality can thus lead to problems in manufacturing processes and even to production downtimes.

Harmonics are currents or voltages whose frequency is above the 50/60 Hz fundamental frequency and which are a whole-number multiple of the fundamental frequency. The harmonics currents have no share in the active power, they only pose a thermal burden for the network. Since harmonic currents flow in addition to the "active" sinusoidal oscillation, they cause electrical losses within the electrical installation, which can lead to thermal overload. Additional losses in the consumer also lead to heating up or overheating and thus to a reduction in service life.

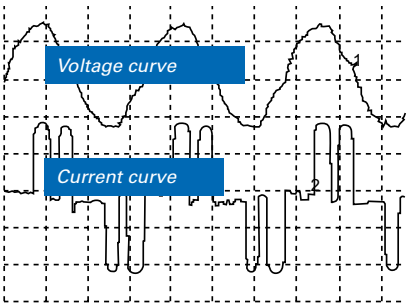

Fig.: Grid distortions due to frequency converters

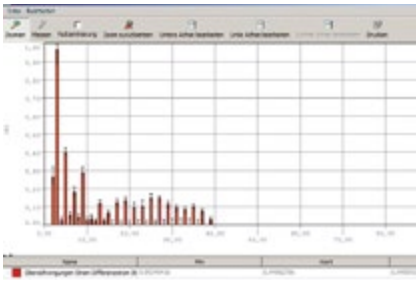

Fig.: Harmonics analysis (FFT)

LIMIT VALUES OF INDIVIDUAL HARMONIC VOLTAGES AT THE TRANSFER POINT UP TO THE 25TH ORDER AS A PERCENTAGE OF THE FUNDAMENTAL U_1					
ODD HARMONICS				EVEN HARMONICS	
NO MULTIPLES OF 3		MULTIPLES OF 3			
ORDER h	RELATIVE VOLTAGE AMPLITUDE U_h	ORDER h	RELATIVE VOLTAGE AMPLITUDE U_h	ORDER h	RELATIVE VOLTAGE AMPLITUDE U_h
5	6.0%	3	5.0%	2	2.0%
7	5.0%	9	1.5%	4	1.0%
11	3.5%	15	0.5%	6 to 24	0.5%
13	3.0%	21	0.5%		
17	2.0%				
19	1.5%				
23	1.5%				
25	1.5%				

The assessment of the harmonic load usually takes place at the connection or transfer point from the public power grid of the respective energy supplier (electric utility). In English-speaking countries, but also increasingly in German-speaking countries, this is referred to as the Point of Common Coupling (PCC). However, under certain circumstances, it may also be important to determine and analyze the harmonic load caused by individual items of equipment or groups of equipment in order to identify internal power quality problems and possibly their originators.

The following parameters are used to assess the harmonic load:



Fig.: Capacitors destroyed by harmonics current

TOTAL HARMONIC DISTORTION (THD)

Total Harmonic Distortion (THD) is a specification to quantify the magnitude of the signal components that result from nonlinear distortion of an electrical signal. This means it indicates the ratio of the RMS value of all harmonics currents to the RMS value of the fundamental oscillation. The THD value is used in low, medium and high voltage systems. Usually THD_i is used for the current distortion and THD_u for distortion of the voltage.

THE VOLTAGE DISTORTION FACTOR

$$THD_U = \frac{1}{|U_{fund}|}\sqrt{\sum_{n=2}^{M}|U_{n.Harm}|^2}$$

- M = Ordinal number of the harmonic
- M = 50 (UMG 605-PRO, UMG 512-PRO)
- Fundamental oscillation fund is n = 1

THE CURRENT DISTORTION FACTOR

$$THD_I = \frac{1}{|I_{fund}|}\sqrt{\sum_{n=2}^{M}|I_{n.Harm}|^2}$$

- M = Ordinal number of the harmonic
- M = 50 (UMG 605-PRO, UMG 512-PRO)
- Fundamental oscillation fund is n = 1

TOTAL DEMAND DISTORTION (TDD)

Especially in North America, the term TDD is also almost always found in connection with the problem of harmonics. This is a specification that refers to the THD_i, but here the harmonics content is referenced against the fundamental oscillation component of the current rating. The TDD thus gives the ratio between the current harmonics (analogous to the THD_i) and the effective current value occurring at a given interval under **full load conditions**. Typical intervals are 15 or 30 minutes.

TDD (I)

$$TDD = \frac{1}{I_L}\sqrt{\sum_{n=2}^{M} I_n^2} \times 100\%$$

- TDD indicates the ratio between the current harmonics (THD_i) and the effective current value at full load.
- I_L = Full load current
- M = 50 (UMG 605-PRO, UMG 512-PRO)

CURRENT / VOLTAGE UNBALANCE

Symmetry in a three-phase system is said to exist when the three phase-to-phase voltages and currents are equal and 120° out of phase with each other.

Unbalance occurs when one or both conditions are not met. In most cases, the cause for unbalance lies in the loads.

In high and medium voltage systems, loads are usually three-phase and balanced, although large single or two-phase loads may also be present (e.g., mains frequency induction furnaces, resistance furnaces, etc.). In the low-voltage network, the electrical loads are often also single-phase (e.g. PCs, consumer electronics, lighting systems, etc.), and the associated load circuits should be distributed as evenly as possible over the three phase conductors within the electrical cabling system. Depending on the balancing of the single-phase loads, the network is operated more or less balanced or unbalanced.

The compatibility level for the degree of unbalance in steady-state operation of the voltage caused by all network loads is specified at ≤ 2%. For some individual consumer installations, the resulting degree of unbalance is restricted to = 0.7%, averaged over 10 minutes.

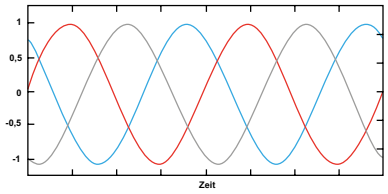

Fig.: Symmetry

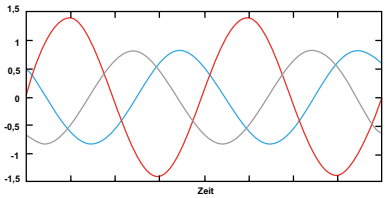

Fig.: Unbalance

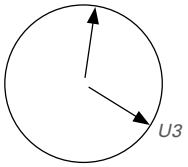

Fig.: Representation of unbalance in a phasor diagram

VOLTAGE UNBALANCE RESULTS IN THE FOLLOWING EFFECTS:

- Increased current load and losses in the network.
- For the same load power, phase currents can reach 2 to 3 times the value, and losses can reach 2 to 6 times the value. Lines and transformers can then only be loaded to half or one third of their rated power.
- Increased losses and vibration torques in electrical machines.
- The field set up by the negative sequence component of currents runs counter to the direction of rotation of the rotor and induces currents in it, which leads to increased thermal stress.
- Rectifiers and inverters react to an unbalanced supply voltage with uncharacteristic harmonic currents.
- In three-phase systems with a Y connection, a current flows through the neutral conductor.

TRANSIENTS

Transients are pulsed electrical phenomena which exist for just a very brief period of time. Usually these are high frequency, steep signals in the form of transient oscillations.

Reliable detection of transient processes in the electrical power supply network is very important to prevent damage. Constant changes in the electrical supply network due to switching operations and faults result in continually changing, new network conditions to which the entire system must adapt. Normally, transient equalizing currents and equalizing voltages occur here. Reliable decision criteria are required to allow assessment of whether the transient processes are the result of an intentional or unintentional network change and whether these are still within the tolerance range.

Depending on the energy influx (e.g. lightning strike), high transient overvoltages can lead to insulation damage and destruction of equipment and machinery.

High-quality, digital power quality analyzers with a high sampling frequency are required to detect and record transients.

PRACTICAL EXAMPLE:

The connection of unchoked capacitors often causes high transient currents, even with unproblematic network configurations. Choking has a strong damping effect in this case and can thus protect against avoidable problems that are difficult to predict. Alternatively, special capacitor contactors with precharging resistors should be used.

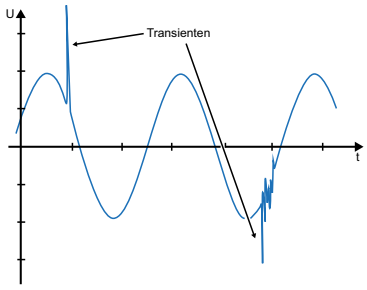

Fig.: Transients

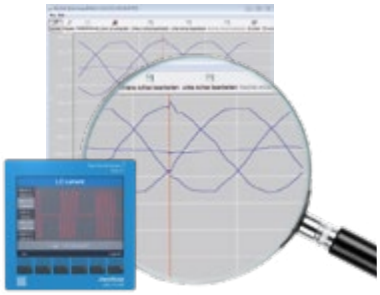

Fig.: With the UMG 512-PRO, transients can be displayed directly on the measurement device.



VOLTAGE DIPS AND INTERRUPTIONS

Voltage dips can lead to major complications, such as the failure of production processes and quality problems. Such dips occur far more often than interruptions. The economic impact of voltage dips is severely underestimated time and again.

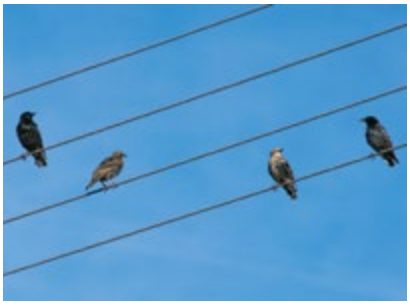

Fig.: Example: Voltage dips due to bird droppings

WHAT IS A VOLTAGE DIP?

According to the European Standard EN 50160, a voltage dip is understood to be a sudden drop in the RMS voltage value to a value between 90% and 5% of the specified value, followed by a direct recovery of the correct voltage. The duration of the voltage dip is between half a period (10 ms) and one minute.

If the RMS value of the voltage does not fall below 90% of the set value, this is considered a normal operating condition. If the voltage drops below 5% of the set value, this is an interruption.

A voltage dip is therefore not to be confused with an interruption. An interruption occurs, for example, after a fuse has tripped (typ. 300 ms). The mains power failure propagates through the rest of the distribution network in the form of a voltage dip.

The figure illustrates the difference between a dip, a momentary interruption and an undervoltage.

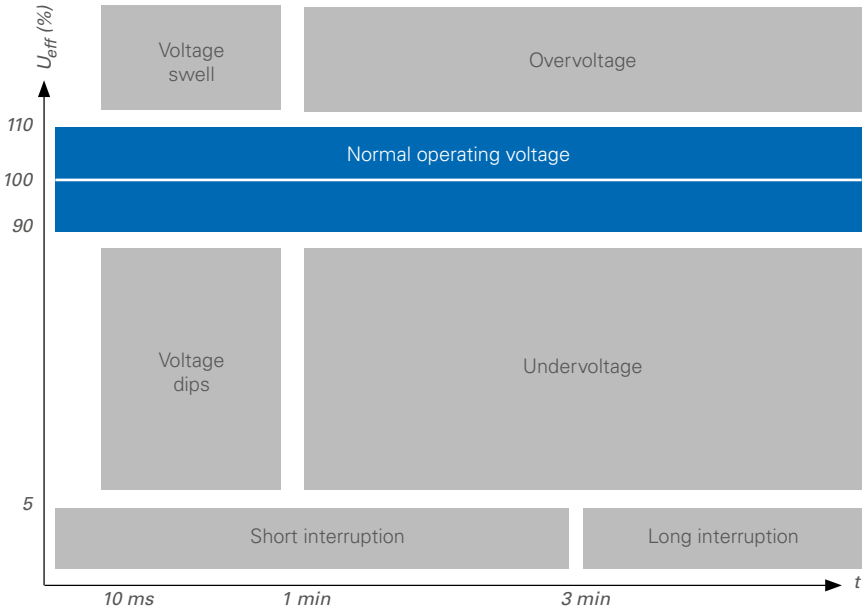

VOLTAGE FLUCTUATIONS ARE CAUSED BY:

- Short circuits
- Large loads switching on and off
- Drives starting (larger loads)
- Load changes for drives
- Pulsed power (vibratory package controls, thermostatic controls)
- Arc furnaces
- Welding machines
- Capacitors switching on

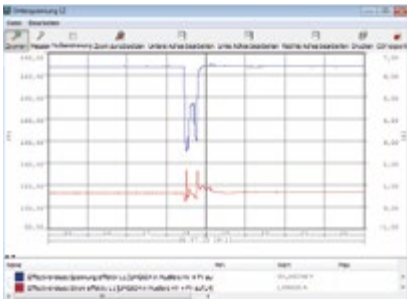

Fig.: Critical voltage dip with production standstill

Voltage dips can cause computer systems, PLC systems, relays and frequency converters to fail. In critical processes, even a single voltage dip can cause high costs, and continuous processes are particularly affected. Examples include injection molding, extrusion, printing processes or the processing of foods such as milk, beer or soft drinks.

THE COSTS CAUSED BY A VOLTAGE DIP CONSIST OF:

- Lost profits due to production downtime
- Costs for making up for lost production time
- Costs for late delivery of products
- Costs for lost raw materials
- Costs for damage to machines, equipment and dies
- Maintenance and personnel costs

Sometimes processes run in unmanned areas where voltage dips are not immediately noticed. In this case, for example, an injection molding machine can come to a standstill unnoticed. If this is only discovered later on, great damage has already been done. Customers receive the products too late and the plastic in the machine has hardened.

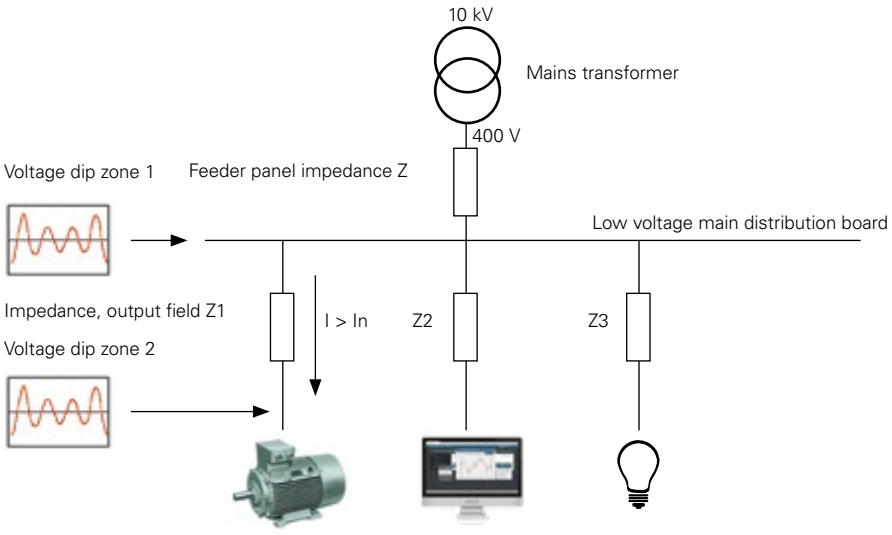

Fig.: The start-up of motors can lead to a voltage dip

FLICKER

Flicker refers to the subjective impression of luminance changes or the impression of discontinuity of visual perceptions caused by light stimuli with temporal fluctuations of the luminance or spectral distribution. From a technical perspective, voltage fluctuations cause luminance changes in lamps that can cause a visually perceptible phenomenon known as flicker. Above a certain threshold, the appearance of flicker can have a disturbing effect. The disturbing effect of voltage fluctuations depends on the repetition rate and the waveform of the voltage changes. The strength of short-term flicker and long-term flicker are defined as measures of the disturbing effect.

Voltage fluctuations caused by individual devices (on the low-voltage network) are permissible if the resulting flicker disturbance factor does not exceed 1. A long-term flicker disturbance factor averaged from twelve values must not exceed the value of 0.65. The simplest method for evaluating this is to use the = 1 p.u. curve. P.u. stands for "unit of perception" and is the maximum tolerance level for the sensitivity of the human eye to the perception of light fluctuations. The combined effect of all disturbance sources must not exceed the value = 1 p.u.

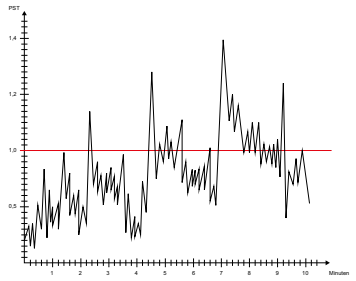

Fig.: Course over time of short-time flicker (PST)



Fig.: A practical example of flicker: A gravel plant

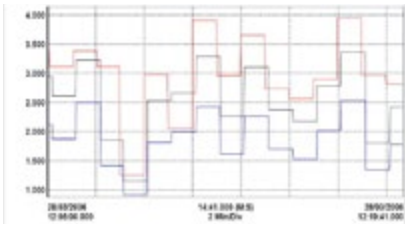

Fig.: Course of flicker over time

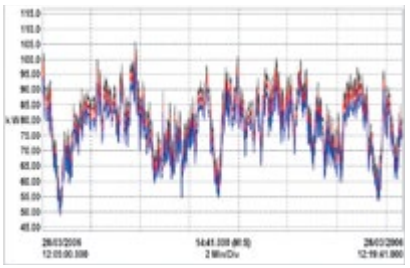

Fig.: Active power curve as a function of the quantity and consistency of the material

PHASE SHIFT AND REACTIVE POWER

Reactive power is required to generate the electromagnetic fields of machines such as three-phase motors, transformers, welding equipment, etc.Since these fields continuously build up and decay, the reactive power oscillates between the generator and the consumer equipment. In contrast to active power, it cannot be used, i.e. converted into another form of energy, and places a load on the power supply network and the generating equipment (generators and transformers). Further, all energy distribution systems must be dimensioned larger to accommodate the reactive current.

It is therefore expedient to reduce the inductive reactive power which arises close to the consumer by means of a counteracting capacitive reactive power of as nearly the same size as possible. This process is called compensating. With compensation, the proportion of inductive reactive power in the network is reduced by the reactive power of the power capacitor or the compensation system (PFC). The generator plants and power transmission equipment are thereby relieved of the reactive current. The phase shift between current and voltage is reduced or, ideally, eliminated altogether with a power factor of 1.

The power factor is a parameter that can be affected by network disturbances such as distortion or unbalance. It deteriorates with progressive phase shift between current and voltage and with increasing distortion of the current curve. It is defined as the quotient of the amount of active power and apparent power and is thus a measure of the efficiency with which a load uses electrical energy. Thus, a higher power factor represents improved utilization of electrical energy and ultimately higher efficiency.

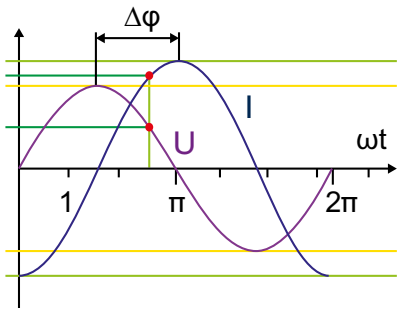

Fig.: Phase shift between current and voltage (Δφ)

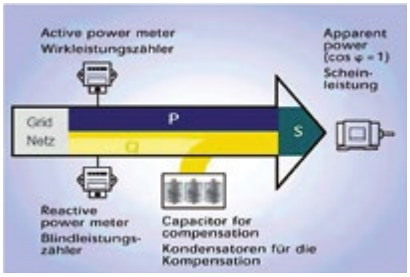

Fig.: Principle of power factor correction

POWER FACTOR (ARITHMETIC)

- The power factor is unsigned

$$PF_A = \frac{|P|}{S_A}$$

Fig.: Power factor (arithmetic)

cos phi – Fundamental power factor

- Only the fundamental oscillation component is used for the calculation of cos phi
- Sign of cos phi(φ):
  - = for delivery of active power
  + = for consumption of active power

Since no uniform phase shift angle can be specified for harmonic loads, the power factor λ and the frequently used effective factor cos(φ_1) must not be equated. Based on the formula $\lambda = \frac{|P|}{S} = \frac{I_1}{I} \cos(\varphi_1) = g_1 \cos(\varphi_1)$ with I_1 = fundamental RMS value of the current, I = total RMS value of the current, g_1 = fundamental oscillation component of the current and cos(φ_1) = displacement factor, it can be seen that only for sinusoidal voltage and current (g = 1) is the power factor λ equal to the displacement factor cos(φ_1). Thus, only for sinusoidal currents and voltages is the power factor λ equal to the cosine of the phase shift angle φ and is defined as the $\cos(\varphi) = \frac{P}{S}$ = effective factor.

$$PF_1 = \cos(\varphi) = \frac{P_1}{S_1}$$

Fig.: cos phi – Fundamental power factor

RCM (RESIDUAL CURRENT MONITORING)

DIFFERENTIAL CURRENT OR RESIDUAL CURRENT MEASUREMENT

Residual currents caused by insulation faults can pose a considerable safety risk in electrotechnical systems. By means of an appropriate protection concept, it is possible to detect residual currents, eliminate insulation faults in good time and thus ensure the availability of the system.

RCM stands for Residual Current Monitoring and means the monitoring of the residual current in electrical installations. This current is calculated from the sum of the currents of all conductors that lead into the system except the protective conductor (PE). Residual currents are typically the result of insulation faults, leakage currents or EMC filter leakage currents, for example.

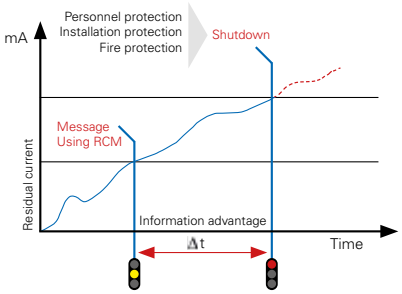

Fig.: Alert before switching off – an objective of residual current monitoring

While RCD devices (residual current circuit breakers) switch off the power supply when a certain residual current is exceeded, RCM measurement devices display the current value, record the long-term history and report any exceedance of a critical value. This message can also be used to switch off the power supply via external switching devices (contactors, relays). Residual current monitoring (RCM) devices are used to detect and report residual currents at an early stage. Countermeasures can be initiated in time so that the system does not have to be shut down. This allows measures to be taken in the event of slowly deteriorating insulation values or gradually increasing residual currents, for example due to aging insulation, even before the system is shut down, e.g.:

- Insulation faults on cables and electrical equipment
- Electrical consumer leakage currents
- Defective PP power capacitors for the PFC
- Defective components in switching power supplies, e.g. in computers
- Correctness of TN-S systems (Terra Neutral Separate)
- Detection of improper PEN connections
- Avoidance of neutral return currents on grounded equipment

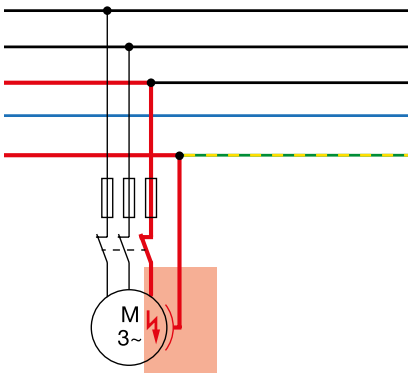

Fig.: Residual current to ground through a high impedance ground fault

Residual current measurement in connection with energy measurement in combined energy / RCM measurement devices in electrical installations is a preventive measure of fire protection and maintenance. Downtime and the associated costs are reduced. Maintenance that is both timely and preventive also significantly improves the economic efficiency and availability of an installation due to the additional information gained from an RCM measurement device.

Continuous RCM monitoring in particular is essential in order to avoid any unwanted surprises during operation and to ensure that information on the current status of the system is always at hand.

BASIC MEASUREMENT PROCEDURE FOR RCM

The operation of RCM devices is based on the residual current principle. All conductors at the measurement point (feeder to be protected), with the exception of the protective conductor, are routed through a residual current transformer. In fault-free operation, the sum of all currents is zero. If, on the other hand, a residual current flows to ground, the current difference in the residual current transformer causes a current which is evaluated by the electronics of the RCM measurement device.

The measurement method is described in IEC/TR 60755. A distinction is made between type A and type B.

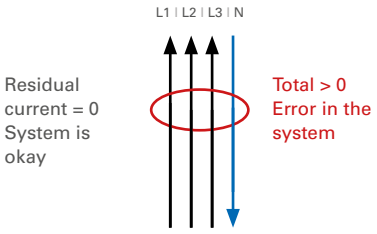

THE DIN EN 62020 / VDE 0663 / IEC 62020 STANDARD:

The standard applies to residual current monitoring devices for domestic installations and similar applications with a rated voltage < 440 V AC and a rated current < 125 A.

The UMG96RM-E can measure residual currents according to IEC/TR 60755 (2008-01)

 type A and

 type B.

OPTIMAL MONITORING DUE TO 6 CURRENT MEASUREMENT CHANNELS

Modern, highly integrated measurement devices allow the combined measurement of

- electrical parameters (V, A, Hz, kW ...)
- Power quality parameters (harmonics, THD, KUs ...)
- Energy consumption (kWh, kvarh ...)
- RCM residual current in only one measurement device. The following example shows a meter with 6 current inputs for this purpose:

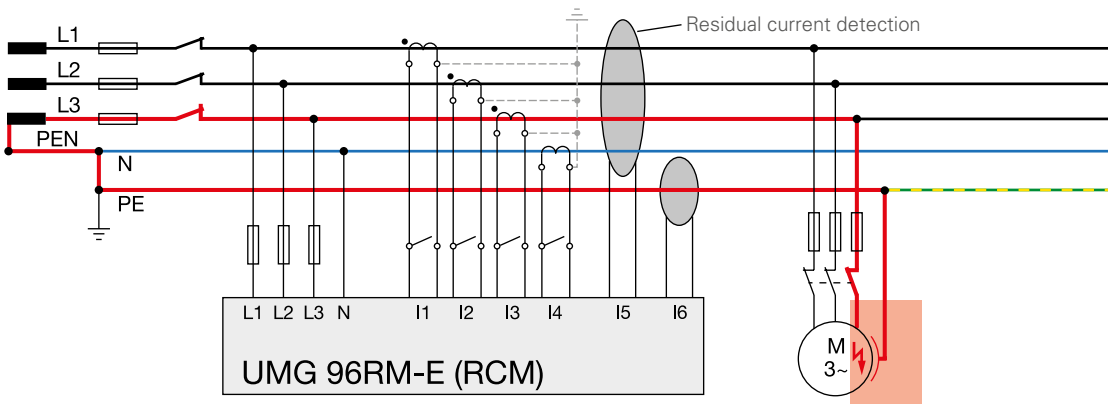

FUNDAMENTALS OF POWER FACTOR CORRECTION

ACTIVE POWER

If an active resistance, e.g. a heater, is connected to an AC circuit, the current and voltage are in phase. Multiplying related instantaneous values of current (I) and voltage (U) yields the instantaneous values of power (P) for alternating current. The curve of the active power is always positive with double mains frequency.

The AC power has the peak value P = U x I. It can be converted into an equivalent DC power, the so-called active power P, by area transformation. In the case of active resistance, the active power is half the peak power.

To determine the AC power, the effective values are always used for the calculation.

$$P = U \bullet I$$
[W] [V] [A]

Fig.: Formula for active power

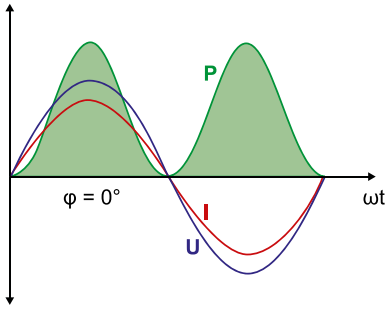

P: ■ **U:** ■ **I:** ■

Fig.: AC power for a purely resistive load

ACTIVE AND REACTIVE POWER

A purely resistive load rarely occurs in practice. Often, there is an inductive component as well. This applies to all consumers that require a magnetic field to function (e.g. motors, transformers, etc.). The current used to build up and reverse the polarity of the magnetic field is not consumed, but oscillates as reactive current between the generator and the consumer.

A phase shift occurs, i.e. the zero crossings of voltage and current are no longer congruent. With an inductive load, the current follows the voltage; with a capacitive load, the relationship is exactly the opposite. If we now calculate the instantaneous values of the power (P = U x I), negative values always occur when one of the two factors becomes negative.

$$P = U \bullet I \bullet \cos \varphi$$
[W] [V] [A]

Fig.: Calculation of active power for resistive and inductive loads

Example:
Phase shift φ = 45° (corresponds to an inductive cos φ = 0.707). The power curve overlaps into the negative range.

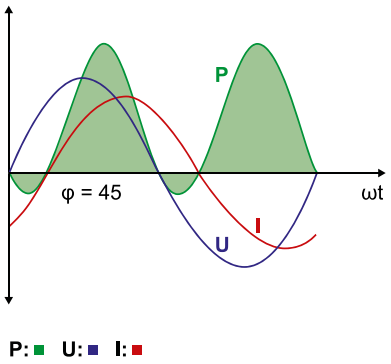

Fig.: Voltage, current and power for mixed resistive, inductive loads

REACTIVE POWER

Inductive reactive power occurs, for instance, in motors and transformers – without taking into account line, iron and friction and windage losses.

If the phase shift between current and voltage is 90°, e.g. for an "ideal" inductance or for a capacitance, the positive and the negative surface components will be equal. The active power then corresponds to the factor 0 and only reactive power occurs. All the energy oscillates back and forth between the consumer and the producer.

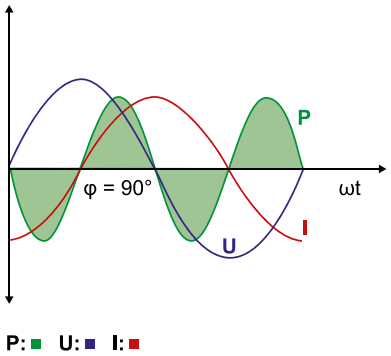

Fig.: Voltage, current and power for a purely reactive load

$$Q = U \cdot I \cdot \sin \varphi$$
$$[var]\ [V]\ [A]$$

Fig.: Determination of the inductive reactive power

APPARENT POWER

The apparent power characterizes the electrical power supplied or to be supplied to an electrical consumer. The apparent power S results from the RMS values of current I and voltage U.

When the reactive power approaches zero, e.g. with DC voltage, the apparent power is equal to the amount of the active power. Otherwise it is greater. Electrical equipment (transformers, switchgear, fuses, electric lines, etc.) that transmit power must be designed according to the apparent power to be transmitted.

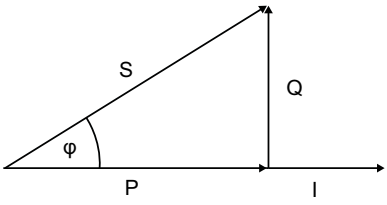

Fig.: Performance diagram

$$S = U \bullet I$$
$$[VA]\ [V]\ [A]$$

Fig.: Apparent power with no phase shift

APPARENT POWER FOR SINUSOIDAL QUANTITIES

For sinusoidal quantities, the displacement reactive power Q occurs when the phases of current and voltage are shifted by an angle φ.

$$S = \sqrt{P^2 + Q^2}$$
$$[VA]\ [W]\ [var]$$

Fig.: The apparent power results from the geometric addition of active and reactive power.

POWER FACTOR (COS φ AND TAN φ)

The ratio of active power P to apparent power S is called the active power factor or effective factor. The power factor can be between 0 and 1.

For sinusoidal currents, the active power factor coincides with the cosine (cos φ). It is defined by the ratio P/S. The active power factor is a measure of which part of the apparent power is converted into active power. At constant active power and voltage, the apparent power and current are smaller the greater the active power factor cos φ.

The tangent (tan) of the phase shift angle (φ) allows a simple conversion of the reactive and active units.

$$\cos \varphi = \frac{P}{S} \quad [W] / [VA]$$

Fig.: Determination of the power factor via active and apparent power

$$\tan \varphi = \frac{Q}{P} \quad [var] / [W]$$

Fig.: Calculation of phase shift via reactive and active power

The cosine and the tangent are related as follows:

$$\cos \varphi = \sqrt{\frac{1}{1 + \tan \varphi^2}}$$

Fig.: Relationship to cos φ and tan φ

In power supply installations, the aim is to achieve the highest possible power factor in order to avoid transmission losses. Ideally, it is exactly 1, but practically it is only about 0.95 (inductive). Energy supply companies often prescribe a power factor of at least 0.9 for their customers. If this value is not reached, the applied reactive energy is billed separately. However, this is irrelevant for private households. To increase the power factor, systems are used to compensate for reactive power. If capacitors of a suitable size are connected in parallel with the loads, the reactive current oscillates between the capacitor and the inductive load. The higher-order network is no longer subject to an additional load. If a power factor of 1 can be reached through the use of compensation, only active current is transmitted.

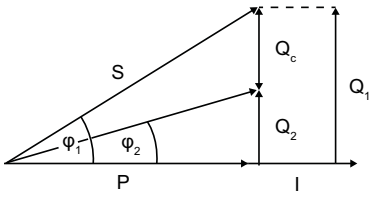

Fig.: Power diagram using power factor correction

The reactive power Q_c, which is absorbed by or dimensioned according to the capacitor, is the difference between the inductive reactive power Q1 before compensation and Q2 after compensation.

It follows that: $Q_c = Q1 – Q2$

$$Q_c = P \bullet (\tan \varphi_1 - \tan \varphi_2)$$

[var] [W]

Fig.: Calculation of reactive power for improvement of the power factor

CALCULATION FORMULAS FOR THE CAPACITOR

CAPACITOR POWER, SINGLE PHASE

Example: 66.5 µF at 400 V / 50 Hz
0.0000665 x 400² x 2 x 3.14 x 50 = 3.340 var = 3.34 kvar

$$Q_c = C \cdot U^2 \cdot 2 \cdot \pi \cdot f_n$$

CAPACITOR POWER WITH DELTA CONNECTION

Example: 3 x 57 µF at 480 V / 50 Hz
3 x 0.000057 x 480² x 2 x 3.14 x 50 = 12.371 var = 12.37 kvar

$$Q_c = 3 \cdot C \cdot U^2 \cdot 2 \cdot \pi \cdot f_n$$

CAPACITOR POWER WITH STAR CONNECTION

Example: 3 x 33.2 µF at 400 V / 50 Hz
3 x 0.0000332 x (400 / 1.73)² x 2 x 3.14 x 50 = 1670 var = 1.67 kvar

$$Q_c = 3 \cdot C \cdot (U / \sqrt{3})^2 \cdot 2 \cdot \pi \cdot f_n$$

CAPACITOR CURRENT IN THE PHASE CONDUCTOR

Example: 25 kvar at 400 V
25,000 / (400 x 1.73) = 36 A

$$I = \frac{Q}{U \cdot \sqrt{3}}$$

$$Q_c = I \cdot U \cdot \sqrt{3}$$

SERIES RESONANT FREQUENCY (FR) AND CHOKING FACTOR (P) OF CHOKED CAPACITORS

Example: p = 0.07 (7% choking) in the 50 Hz network

$$f_r = 50 \cdot \sqrt{\frac{1}{0{,}07}} = 189 \text{ Hz}$$

$$f_r = f_n \cdot \sqrt{\frac{1}{p}} \qquad p = \left(\frac{f_n}{f_r}\right)^2$$

REQUIRED CAPACITOR NOMINAL RATING, THREE-PHASE IN CHOKED VERSION

$$Q_c = \frac{C \cdot 3 \cdot U^2 \cdot 2 \cdot \pi \cdot f_n}{1 - p}$$

Example: 3 x 308 µF at 400 V / 50 Hz with p = 7% choked

0.000308 x 3 x 4002 x 2 x 3.14 x 50 / (1 – 0.07) = 50 kvar

$$Q_c = \left(1 - \frac{7}{100}\right) \cdot \frac{440^2}{400^2} \cdot 50 = 56{,}3 \text{ kvar}$$

Which capacitor should be used for this?
This means that for a 50-kvar stage, a 440-V 56-kvar capacitor is needed.

$$Q_c = \left(1 - \frac{P}{100}\right) \cdot \frac{U_c^2}{U_N^2} \cdot N_c$$

POWER FACTOR AND CONVERSION OF COS AND TAN

$$\cos \varphi = \frac{P}{S}$$

$$\cos \varphi = \sqrt{\frac{1}{1 + \tan \varphi^2}}$$

Conversion of the capacitor power in dependence on the mains voltage
Determination of the reactive power Q_{new} C is constant here.

$$Q_{neu} = \left(\frac{U_{neu}}{U_C}\right)^2 \cdot \frac{f_{neu}}{f_R} \cdot Q_C$$

Example:

Grid: 400 V, 50 Hz, 3-phase
Capacitor nominal rating: 480 V, 70 kvar, 60 Hz, 3-phase, delta, unchoked
Question: resulting capacitor nominal power?

$$Qnew = \left(\frac{400}{480}\right)^2 \cdot \frac{50}{60} \cdot 70 = 40{,}5 \text{ kvar}$$

The resulting compensation power of this 480 V capacitor connected to a 400 V 50 Hz mains is only 40.5 kvar.

Definition

Q_C	Rated power of capacitor
P	Degree of choking
U_C	Capacitor voltage
U_N	Mains voltage
N_C	Effective filter performance
Q_{new}	New reactive power
U_{new}	New voltage
f_{new}	New frequency
f_R	Rated frequency of the capacitor

CABLE CROSS SECTIONS AND FUSES

This table provides a general, non-binding indication of common practice. In addition to being dependent on the nominal power of the PFC system, the connection cross sections and the level of fuse protection required also depend on national regulations, the cable material used and the ambient conditions. The recommendation for fuse current rating is for short-circuit protection – NH fuses are unsuitable for overload protection with power capacitors. The system installer or the planner is responsible for the dimensioning and selection of the cable cross sections and fuses in each individual case.

PFC CABLE CROSS SECTIONS, FUSES (FOR MAINS WITH 400 V / 50 HZ)			
POWER KVAR	NOMINAL CURRENT A	CABLE CROSS SECTION NYY-J MM²	NH FUSE IN THE OUTGOING FEEDER
5	7	4 x 2.5	16
7.5	10	4 x 4	20
10	14	4 x 4	25
12.5	18	4 x 6	35
15	22	4 x 6	35
17.5	25	4 x 10	50
20	29	4 x 10	50
25	36	4 x 16	63
30	43	4 x 16	80
37.5	54	4 x 25	100
50	72	3 x 35/16	125
55 – 65	79 – 94	3 x 35/16	160
70 – 85	101 – 123	3 x 70/35	200
86 – 100	124 – 145	3 x 95/50	250
101 – 125	146 – 181	3 x 120/70	250
126 – 160	182 – 231	2‘‘3 x 70/35	315
161 – 180	233 – 260	2‘‘3 x 95/50	400
181 – 200	261 – 289	2‘‘3 x 120/70	400
201 – 250	290 – 361	2‘‘3 x 150/70	500
251 – 300	362 – 434	2‘‘3 x 185/95	630

Connection cross sections apply only for the specified capacitor ratings

Important note:
When expanding existing installations, the busbar separation must be carried out beforehand!

Power factor correction systems with a capacity above 300 kvar have two separate busbar systems and require two separate incoming power feeders. The table applies for unchoked and choked compensation systems. In any case, the currently valid regulations (e.g. DIN VDE 0298) must be observed.

COS PHI

CALCULATION OF THE REQUIRED KVAR COMPENSATION SYSTEM POWER

This selection table was created to facilitate the calculation of the required reactive power. You can use the current power factor and the target power factor to determine a multiplier from the table and multiply it by the active power to be compensated. The result is the required reactive power for your power factor correction system. This table can also be found as an MS Excel file for calculation on our homepage at https://www.janitza.com/en/downloads/tools

cos phi selection table

Active power	P = 100 kW
ACTUAL cos φ	= 0.65
TARGET cos φ	= 0.95
Factor F from table	= 0.84
Compensation power	Q_C = P x (tan φ1 - tan φ2) P * F 100 x 0.84 84 kvar

ACTUAL		Target power factor										
tan φ	cos φ	cos φ										
		0.80	0.82	0.85	0.88	0.90	0.92	0.94	0.95	0.96	0.98	1.00
		Factor F										
1.33	**0.60**	0.58	0.64	0.71	0.79	0.85	0.91	0.97	1.00	1.04	1.13	1.33
1.30	**0.61**	0.55	0.60	0.68	0.76	0.81	0.87	0.94	0.97	1.01	1.10	1.30
1.27	**0.62**	0.52	0.57	0.65	0.73	0.78	0.84	0.90	0.94	0.97	1.06	1.27
1.23	**0.63**	0.48	0.53	0.61	0.69	0.75	0.81	0.87	0.90	0.94	1.03	1.23
1.20	**0.64**	0.45	0.50	0.58	0.66	0.72	0.77	0.84	0.87	0.91	1.00	1.20
1.17	**0.65**	0.42	0.47	0.55	0.63	0.68	0.74	0.81	**0.84**	0.88	0.97	1.17
1.14	**0.66**	0.39	0.44	0.52	0.60	0.65	0.71	0.78	0.81	0.85	0.94	1.14
1.11	**0.67**	0.36	0.41	0.49	0.57	0.62	0.68	0.75	0.78	0.82	0.90	1.11
1.08	**0.68**	0.33	0.38	0.46	0.54	0.59	0.65	0.72	0.75	0.79	0.88	1.08
1.05	**0.69**	0.30	0.35	0.43	0.51	0.56	0.62	0.69	0.72	0.76	0.85	1.05
1.02	**0.70**	0.27	0.32	0.40	0.48	0.54	0.59	0.66	0.69	0.73	0.82	1.02
0.99	**0.71**	0.24	0.29	0.37	0.45	0.51	0.57	0.63	0.66	0.70	0.79	0.99
0.96	**0.72**	0.21	0.27	0.34	0.42	0.48	0.54	0.60	0.64	0.67	0.76	0.96
0.94	**0.73**	0.19	0.24	0.32	0.40	0.45	0.51	0.57	0.51	0.64	0.73	0.94
0.91	**0.74**	0.16	0.21	0.29	0.37	0.42	0.48	0.55	0.58	0.62	0.71	0.91
0.88	**0.75**	0.13	0.18	0.26	0.34	0.40	0.46	0.52	0.55	0.59	0.68	0.88
0.86	**0.76**	0.11	0.16	0.24	0.32	0.37	0.43	0.49	0.53	0.56	0.65	0.86
0.83	**0.77**	0.08	0.13	0.21	0.29	0.34	0.40	0.47	0.50	0.54	0.63	0.83
0.80	**0.78**	0.05	0.10	0.18	0.26	0.32	0.38	0.44	0.47	0.51	0.60	0.80
0.78	**0.79**	0.03	0.08	0.16	0.24	0.29	0.35	0.41	0.45	0.48	0.57	0.78
0.75	**0.80**		0.05	0.13	0.21	0.27	0.32	0.39	0.42	0.46	0.55	0.75
0.72	**0.81**		0.03	0.10	0.18	0.24	0.30	0.36	0.40	0.43	0.52	0.72
0.70	**0.82**			0.08	0.16	0.21	0.27	0.34	0.37	0.41	0.49	0.70
0.67	**0.83**			0.05	0.13	0.19	0.25	0.31	0.34	0.38	0.47	0.67
0.65	**0.84**			0.03	0.11	0.16	0.22	0.28	0.32	0.35	0.44	0.65
0.62	**0.85**				0.08	0.14	0.19	0.26	0.29	0.33	0.42	0.62
0.59	**0.86**				0.05	0.11	0.17	0.23	0.26	0.30	0.39	0.59
0.57	**0.87**				0.03	0.08	0.14	0.20	0.24	0.28	0.36	0.57
0.54	**0.88**					0.06	0.11	0.18	0.21	0.25	0.34	0.54
0.51	**0.89**					0.03	0.09	0.15	0.18	0.22	0.31	0.51
0.48	**0.90**						0.06	0.12	0.16	0.19	0.28	0.48
0.46	**0.91**						0.03	0.09	0.13	0.16	0.25	0.46
0.43	**0.92**							0.06	0.10	0.13	0.22	0.43
0.40	**0.93**							0.03	0.07	0.10	0.19	0.40
0.36	**0.94**								0.03	0.07	0.16	0.36
0.33	**0.95**									0.04	0.13	0.33
0.29	**0.96**										0.09	0.29
0.25	**0.97**										0.05	0.25

FIXED COMPENSATION

SELECTION TABLE FOR FIXED COMPENSATION OF MOTORS				
MOTOR POWER IN KW	CAPACITOR POWER AT NO LOAD IN KVAR (DEPENDING ON REVOLUTIONS/MINUTE)			
	3000	1500	1000	750
1.5	0.8	1	1.1	1.2
3	1.5	1.6	1.8	2.3
5.5	2.2	2.4	2.7	3.2
7.5	3.4	3.6	4.1	4.6
11	5	5.5	6	7
15	6.5	7	8	9
18.5	8	9	10	11
22	10	11	12	13
30	14	15	17	20
45	19	21	24	28
75	28	32	37	41
90	34	39	44	49
110	40	46	52	58

Guide values for individual compensation of motors according to VDEW



Comment:

- *The values serve only as a guideline*
- *Overcompensation must be avoided to prevent overexcitation*

SELECTION TABLE FOR FIXED COMPENSATION OF TRANSFORMERS	
TRANSFORMER RATED POWER IN KVA	CAPACITOR NOMINAL POWER IN KVAR
100	4.8
160	6.25
200	7.2
250	7.5
315	9.3
400	10
500	12.5
630	15
800	20
1000	25
1250	30
1600	40
2000	50



Comment:

- *values are only indicative (for three-phase transformers with normal losses, the compensation power is between 1 and 5% of their nominal power, depending on their size).*
- *The observance of regional electric utility regulations is mandatory.*
- *Make sure that appropriate back-up fuses and short-circuit-proof cables are used.*

CONTINUOUS MEASUREMENT

HISTORY

In the past, the processors available on the market were not powerful enough to measure and simultaneously calculate the various parameters.

Consequently, only random measurements were carried out with older measurement devices. That meant that measurements were made for a few periods, then the measurement was stopped and the values were calculated. No further measurement was performed while processing was being carried out. Thus, out of 50 periods, only some periods were actually measured.

"EVERY MEASUREMENT DEVICE MEASURES CONTINUOUSLY, DOESN'T IT ...?" *Customer quote*

TODAY

The new product families, such as the UMG 96RM, UMG 604-PRO, UMG 605-PRO, UMG 509-PRO, UMG 512-PRO, use cutting edge microprocessors with completely new architecture, an integrated range of capabilities and considerably higher performance.

Processors like this were not available in the past! These processors are more expensive than the conventional processors which are still widely used in many simple measurement devices. The above-mentioned product families employ continuous measurement. Here, all periods are recorded, i.e. out of 50 periods, 50 periods are measured.At the same time, the data are processed and the various electrical, PQ and energy parameters are calculated.

It is self-evident that this results in a significant improvement in measuring accuracy. Another point to be considered is that in the case of rapid load changes (e.g. spot welding), random measurement can lead to a considerable deviation in the measurement result and in the working measurement.

MARKET SITUATION

Simple measurement devices and measurement devices with an inexpensive or older design for the measuring electronics are still offered and use random measurement. When the world market is considered, it appears that random measurement will in fact still prevail and be considered state of the art!

It is also common for the work to be measured continuously, while all other values are not determined continuously, but only by sampling.

SUMMARY

Continuous measurement requires higher quality components. The continuous measurement of all values results in the achievement of significantly higher measuring accuracies.

MEASURE, CALCULATE, STORE – RING BUFFERS ARE A THING OF THE PAST!

As described already in detail in the previous article, the current generation of our measurement devices has very powerful digital signal processors (DSP) which allow continuous and uninterrupted acquisition of current and voltage, as well as the calculation of all conceivable parameters. What are the details about how this is done, how does the measuring process work, in what form are measured values available and where are they stored?

Modern measurement devices like our UMGs can basically be thought of as PCs. The main players are the CPU (DSP), RAM, hard disk (flash memory) and communication ports (RS-485, RJ45).

The following groups of measured values must be distinguished:

ONLINE VALUES

Online values are determined over a measurement interval of 200 ms or as the average of the full-wave RMS values of 10 periods. Online values are all values that the measurement device continuously determines and calculates. Depending on the measurement device, this means up to 2,000 values are available per 200 ms for all measuring channels. The most important of these can be read directly from the displays of the UMGs. The entire range of measured values can be displayed via the GridVis® software and in the topology views.

All measured values are available continuously in defined Modbus memory registers for external access by suitable third-party software.

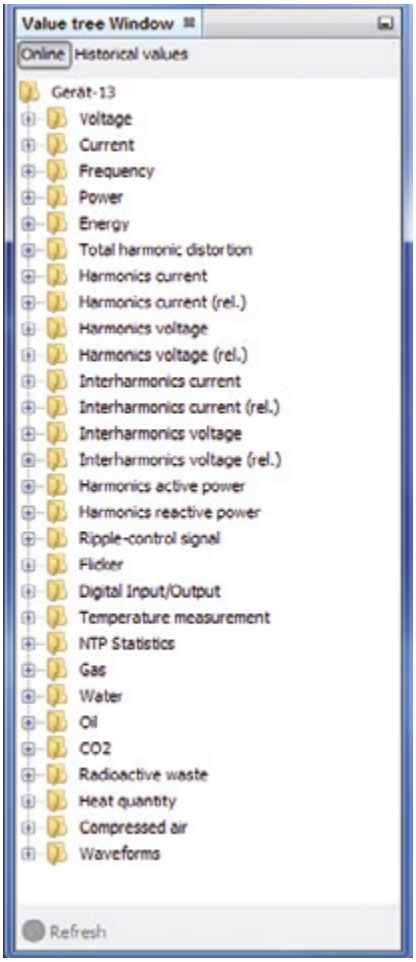

Fig.: Online values, UMG 605-PRO value tree

HISTORICAL VALUES

RECORDINGS

Historical values are formed from the online values. To do this, one or more recording configurations are created in the device configuration. A time period for the formation of an average value is defined for the respective recording, e.g. 15-minute averages for the recording of load curves, 1-hour averages for energy, etc. The time periods can range from 200 ms to several days, depending on the device type. For power quality measurements according to EN 50160, EN 61000-2-4 or EN 50160, IEEE519, predefined recording configurations are available and can be activated by mouse click.

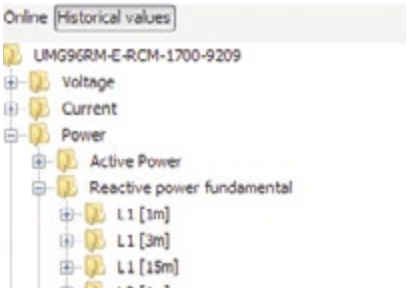

Fig.: Customer-specific historical recordings, UMG 604-PRO value tree

Historical values are usually first stored in the measurement device on internal flash memory. Formerly this was also called a ring buffer. Each stored value receives a timestamp. The values can be read out manually or automatically (Service) via the GridVis® software. The measured value and timestamp are stored in a database. These values can then be evaluated in tabular or graphical form via GridVis® or external database tools.

EVENTS

Events are overvoltages, undervoltages and overcurrents. The basis here are the 20-ms full-wave RMS values for the UMG 604-PRO and UMG 509-PRO or the 10-ms half-wave RMS values for the UMG 605-PRO and UMG 512-PRO. When the defined tolerance limits are exceeded or undershot, the event is stored in the flash memory. In addition, a pre- and post-event period is defined so that network events can be analyzed immediately before and after the occurrence of the event. Thus, a maximum of all voltage and current channels can be displayed graphically and coherently over the specified evaluation period.

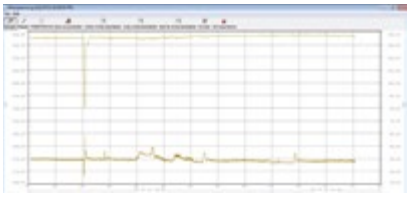

Fig.: Event recording, voltage dip/ undervoltage

TRANSIENTS

Recording transients requires the full performance capacity of the UMGs. At a sampling rate of 20 kHz, transients as of 50 µs can be recorded. Similar to the recording of events, threshold values as well as lead and lag times can be defined here as well. In the same way, it is possible to specify which channels are to be recorded in a graph as a waveform simultaneously with the occurrence of transients.

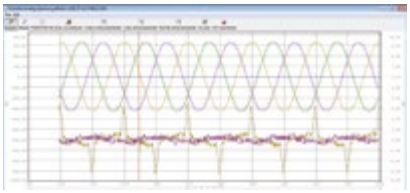

Fig.: Transients recording

FLAGS

Flags are used to mark and store irregularities during measurement and recording according to the IEC 61000-4-30 standard. For example, causes of recording gaps can be identified.

Flag	Note
LostWindow	200 ms measuring window has been lost
LostPLL	The device has lost the network synchronization
Overcurrent	Overrange A
Overvoltage	Overrange V
Firmware upgrade	Firmware upgrade
Initialization	Initialization buffer



Fig.: Flag recording

All recordings of historical data, events, transients and flags run in the measurement device continuously, independently of each other, and in parallel.

All stored data are stored in a historically sorted form. If the flash memory is full, the historically oldest data are overwritten. By regularly reading the data into a database, values that are to be overwritten on the measurement device can already be stored on the server, so that no measured values are lost.

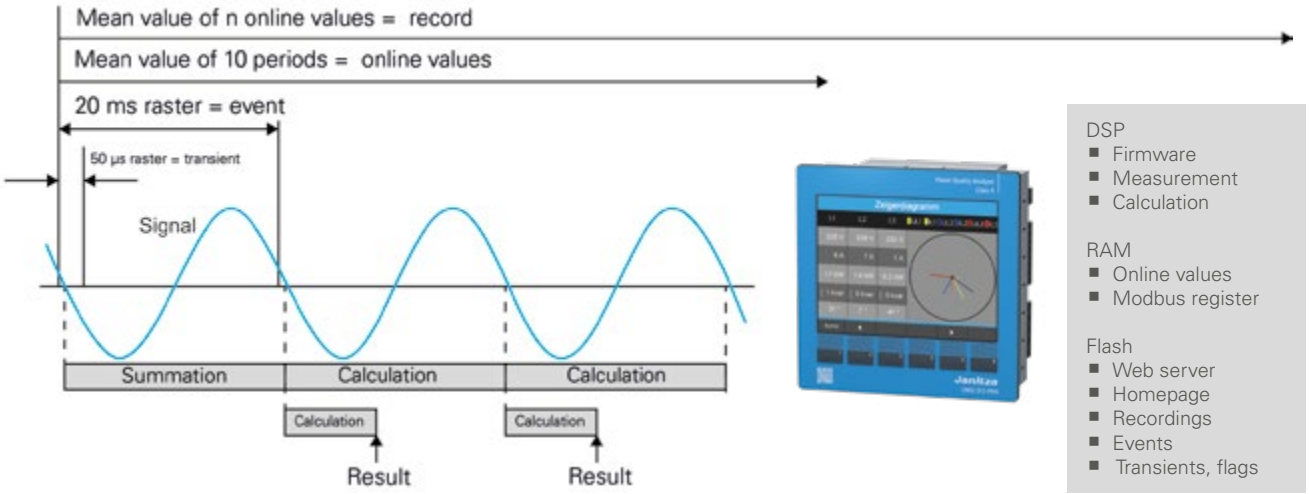

DSP
- Firmware
- Measurement
- Calculation

RAM
- Online values
- Modbus register

Flash
- Web server
- Homepage
- Recordings
- Events
- Transients, flags

FORMULARY

RMS value of current for phase conductor p

$$I_p = \sqrt{\frac{1}{N} \cdot \sum_{k=0}^{N-1} i_{p_k}^{\,2}}$$

RMS value of the neutral conductor current

$$I_N = \sqrt{\frac{1}{N} \cdot \sum_{k=0}^{N-1} (i_{1_k} + i_{2_k} + i_{3_k})^2}$$

RMS voltage L-N

$$U_{pN} = \sqrt{\frac{1}{N} \cdot \sum_{k=0}^{N-1} u_{pN_k}^{\,2}}$$

RMS voltage L-L

$$U_{pg} = \sqrt{\frac{1}{N} \cdot \sum_{k=0}^{N-1} (u_{gN_k} - u_{pN_k})^2}$$

Star point voltage (vectorial)

$$U_{\text{Star point voltage}} = U_{1_{rms}} + U_{2_{rms}} + U_{3_{rms}}$$

Active power for phase conductor

$$P_p = \frac{1}{N} \cdot \sum_{k=0}^{N-1} (u_{pN_k} \times i_{p_k})$$

Apparent power for phase conductor p

- The apparent power is unsigned.

$$S_p = U_{pN} \cdot I_p$$

Total apparent power (arithmetic)

- The apparent power is unsigned.

$$S_A = S_1 + S_2 + S_3$$

Ordinal numbers of the harmonics

xxx[0] = fundamental oscillation (50Hz/60Hz)
xxx[1] = 2nd harmonic (100Hz/120Hz)
xxx[2] = 3rd harmonic (150Hz/180Hz)
etc.

THD

- THD (Total Harmonic Distortion) is the distortion factor and indicates the ratio of the harmonic components of an oscillation to the fundamental oscillation.

The voltage distortion factor

- M = Ordinal number of the harmonic
- M = 50 (UMG 605-PRO, UMG 512-PRO)
- Fundamental oscillation fund is n = 1

$$THD_U = \frac{1}{|U_{fund}|}\sqrt{\sum_{n=2}^{M}|U_{n.Harm}|^2}$$

The current distortion factor

- M = Ordinal number of the harmonic
- M = 50 (UMG 605-PRO, UMG 512-PRO)
- Fundamental oscillation fund is n = 1

$$THD_I = \frac{1}{|I_{fund}|}\sqrt{\sum_{n=2}^{M}|I_{n.Harm}|^2}$$

ZHD

- ZHD is the THD for the interharmonics
- It is calculated in the UMG 605-PRO

Interharmonics

- Sinusoidal oscillations whose frequencies are not an integer multiple of the mains frequency (fundamental oscillation)
- It is calculated in the UMG 605-PRO
- Calculation and measurement methods comply with DIN EN 61000-4-30
- The ordinal number of an intermediate harmonic corresponds to the ordinal number of the next smallest harmonic. For example, the 3rd intermediate harmonic lies between the 3rd and 4th harmonic.

TDD (I)

- TDD (Total Demand Distortion) indicates the ratio between the current harmonics (THD_i) and the current RMS value at full load.
- I_L = Full load current
- M = 50 (UMG 605-PRO, UMG 512-PRO)

$$TDD = \frac{1}{I_L}\sqrt{\sum_{n=2}^{M} I_n^2} \times 100\%$$

RIPPLE CONTROL SIGNAL U (EN 61000-4-30)

The ripple control signal U is a voltage (200 ms measured value) measured at a carrier frequency specified by the user. Only frequencies below 3 kHz are considered.

RIPPLE CONTROL SIGNAL I

The ripple control signal I is a current (200 ms measured value) measured at a carrier frequency specified by the user. Only frequencies below 3 kHz are considered.

POSITIVE, NEGATIVE, AND ZERO SEQUENCE COMPONENT

- The magnitude of a voltage or current unbalance in a three-phase system is characterized by means of the positive sequence, negative sequence, and zero sequence components.
- The symmetry of three-phase systems that is desirable during normal operation is disturbed by unbalanced loads, faults and equipment.
- A three-phase system is called symmetrical if the three phase-to-phase voltages and currents are of equal magnitude and 120° out of phase with each other. If one or both conditions are not met, the system is said to be unbalanced. A simplified analysis of an unbalanced fault in a three-phase system is possible by calculating the symmetrical components consisting of the positive sequence, negative sequence and zero sequence.
- Unbalance is a power quality characteristic for which limits have been defined in international standards (e.g. EN 50160).

Positive sequence component

$$U_{Mit} = \frac{1}{3}\left|U_{L1,fund} + U_{L2,fund} \cdot e^{j\frac{2\pi}{3}} + U_{L3,fund} \cdot e^{j\frac{4\pi}{3}}\right|$$

Negative sequence component

$$U_{Geg} = \frac{1}{3}\left|U_{L1,fund} + U_{L2,fund} \cdot e^{-j\frac{2\pi}{3}} + U_{L3,fund} \cdot e^{-j\frac{4\pi}{3}}\right|$$

Zero sequence component

A zero component can only occur if a summation current can flow back via the neutral conductor.

$$U_{\substack{\text{Zero sequence}\\ \text{component}}} = \frac{1}{3}\left|U_{L1,fund} + U_{L2,fund} + U_{L3,fund}\right|$$

Voltage unbalance

$$Unbalance = \frac{U_{pos}}{U_{neg}}$$

Downward deviation U (EN 61000-4-30)

$$U_{unter} = \frac{U_{din} - \sqrt{\frac{\sum_{i=1}^{n} U_{rms-unter,i}^2}{n}}}{U_{din}}[\%]$$

Downward deviation I

$$I_{under} = \frac{I_{Nominal\ current} - \sqrt{\frac{\sum_{i=1}^{n} I_{rms-\ under,i}^2}{n}}}{I_{Nominal\ current}}[\%]$$

K factor

- The K factor describes the increase in eddy current losses with a harmonics load. With a sinusoidal load on the transformer, the K factor = 1. The larger the K-factor, the greater a transformer's capacity for being loaded with harmonics without overheating.

Power factor (arithmetic)

- The power factor is unsigned.

$$PF_A = \frac{|P|}{S_A}$$

cos phi – Fundamental Power Factor

- Only the fundamental oscillation component is used to calculate cos phi
- cos phi sign:
  - = for delivery of active power
  + = for consumption of active power

$$PF_1 = \cos(\varphi) = \frac{P_1}{S_1}$$

cos phi sum

- cos phi sign:
  - = for delivery of active power
  + = for consumption of active power

$$\cos(\varphi)_{Sum_3} = \frac{P_{1_{fund}} + P_{2_{fund}} + P_{3_{fund}}}{\sqrt{(P_{1_{fund}} + P_{2_{fund}} + P_{3_{fund}})^2 + (Q_{1_{fund}} + Q_{2_{fund}} + Q_{3_{fund}})^2}}$$

$$\cos(\varphi)_{Sum_4} = \frac{P_{1_{fund}} + P_{2_{fund}} + P_{3_{fund}} + P_{4_{fund}}}{\sqrt{(P_{1_{fund}} + P_{2_{fund}} + P_{3_{fund}} + P_{4_{fund}})^2 + (Q_{1_{fund}} + Q_{2_{fund}} + Q_{3_{fund}} + Q_{4_{fund}})^2}}$$

Phase angle Phi

- The phase angle between the current and voltage of phase conductor p is calculated and displayed according to DIN EN 61557-12.
- The sign of the phase angle corresponds to the sign of the reactive power.

Fundamental oscillation reactive power

The fundamental oscillation reactive power is the reactive power of the fundamental and is calculated using Fourier analysis (FFT). The voltage and current do not have to be sinusoidal. All reactive powers calculated in the device are fundamental oscillation reactive powers.

Sign of the reactive power

- Sign Q = +1 for phi in the range 0 ... 180° (inductive)
- Sign Q = -1 for phi in the range 180 ... 360° (capacitive)

$$\text{Sign } Q(\varphi) = +1 \quad \text{if} \quad \varphi \in [0° - 180°]$$

$$\text{Sign } Q(\varphi_p) = -1 \quad \text{if} \quad \varphi_p \in [180° - 360°]$$

Reactive power for phase conductor p

- Reactive power of the fundamental oscillation

$$Q_{fund\,p} = \text{Sign } Q(\varphi_p) \cdot \sqrt{S_{fund\,p}^{\,2} - P_{fund\,p}^{\,2}}$$

TOTAL REACTIVE POWER

Reactive powers of the fundamental oscillation

$$Q_V = Q_1 + Q_2 + Q_3$$

REACTIVE DISTORTION POWER

- The reactive distortion power is the reactive power of all harmonics and is calculated using Fourier analysis (FFT).

$$D = \sqrt{S^2 - P^2 - Q_{fund}^2}$$

- The apparent power S contains the fundamental oscillation and all harmonic components up to the M-th harmonic.
- The active power P contains the fundamental oscillation and all harmonic components up to the M-th harmonic.
- M = 50 (UMG 605-PRO, UMG 512-PRO)

Reactive energy per phase

$$E_{r_{L1}} = \int Q_{L1}(t) \cdot \Delta t$$

Reactive energy per phase, inductive

$$E_{r(ind)_{L1}} = \int Q_{L1}(t) \cdot \Delta t \qquad \text{For } Q_{L1}(t) > 0$$

Reactive energy per phase, capacitive

$$E_{r(cap)_{L1}} = \int Q_{L1}(t) \cdot \Delta t \qquad \text{For } Q_{L1}(t) < 0$$

Reactive energy, sum L1-L3

$$E_{r_{L1,L2,L3}} = \int (Q_{L1}(t) + Q_{L2}(t) + Q_{L3}(t)) \cdot \Delta t$$

Reactive energy, sum L1-L3, inductive

$$E_{r(ind)_{L1,L2,L3}} = \int (Q_{L1}(t) + Q_{L2}(t) + Q_{L3}(t)) \cdot \Delta t$$

Reactive energy, sum L1-L3, capacitive

$$E_{r(cap)_{L1,L2,L3}} = \int (Q_{L1}(t) + Q_{L2}(t) + Q_{L3}(t)) \cdot \Delta t$$

GENERAL INFORMATION ABOUT CURRENT TRANSFORMERS

GENERAL

Current transformers are primarily used where currents cannot be measured directly. They are special forms of transformers that translate the primary current into a (typically) smaller, standardized secondary current of a certain accuracy (class) and also galvanically separate the primary and secondary circuits. Using saturation properties of the core material, it is possible to protect the secondary circuit, including connected measuring equipment, from overcurrents (short circuit) at nominal conditions.



Fig.: Plug-in current transformers

A basic distinction can be made between single-conductor current transformers and wound current transformers. The most common representative of single-conductor current transformers is the plug-in current transformer, which is plugged onto the current-carrying conductor and thus forms a (short-circuited) transformer with one primary winding (and secondary windings corresponding to the transformer ratio).

SELECTING CURRENT TRANSFORMERS

RATIO

The rated ratio is the ratio of the primary rated current to the secondary rated current and is indicated as an unabbreviated fraction on the rating plate.

For technical, but above all for economic reasons, x / 1 A transformers are recommended for long measuring cable lengths. Line losses are calculated as a function of cross section x length x current^2.

PRIMARY CURRENT

The rated or primary current (former designation) is the value of the primary and secondary current (primary rated current, secondary rated current) for which the current transformer is rated, as indicated on the rating plate. The standard values of the primary rated current are: 10 – 12.5 – 15 – 20 – 25 – 30 – 40 – 50 – 60 – 75 A and their decimal multiples and parts. Standardized secondary currents are 1 and 5 A, preferably 5 A.

The correct selection of the primary current is important for the measuring accuracy. A ratio slightly beyond the measured / defined current (In) is recommended.

Example: In = 1,154 A, selected transformer ratio = 1,250/5.

The primary current can also be defined on the basis of the following considerations:

- Dependent on transformer primary current times approx. 1.1 (next transformer size)
- Fuse protection (fuse primary current = transformer primary current) of the measured part of the system (LVMDB, SDP)
- Actual primary current times 1.2 (if the actual current is significantly below the transformer or fuse primary current, this approach should be selected)
- Overdimensioning the current transformer must be avoided, since otherwise the measuring accuracy at relatively low currents (in relation to the primary rated current) drops, in some cases considerably.

RATED POWER

The rated power must be greater than the sum of the power of the cable, the measurement device and any loads and is specified in VA.Standardized values are between 1 and 30 VA according to PTB. Values above 30 VA may also be selected according to the use case. The rated power describes the capacity of a current transformer to "drive" the secondary current through a load and lines while within the fault limits.

When selecting the appropriate power, the following parameters must be taken into account: Measurement device power consumption (for series connection ...), cable length, cable cross section. The longer the cable length and the smaller the cable cross section, the higher the losses through the supply cable, i.e. the nominal power of the transformer must be selected accordingly.

The sum of the consumer power should be close to the transformer rated power, otherwise the measured value may be too positive. A very low load power (under loading) increases the overcurrent factor, and measurement devices may not be adequately protected in the event of a short circuit. Excessive consumer power (overloading) has a negative effect on accuracy.

Often current transformers are already present in an installation and can be used when retrofitting with a measurement device. The nominal power of the transformer must be taken into account here: Is it sufficient to drive the additional measurement devices? For low impedance measurement devices, underloading can be prevented by using an additional load.

Calculation of the rated power S_n:
Copper wire = 10 m

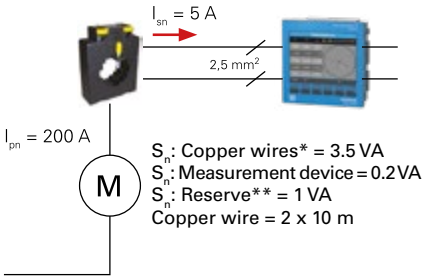

S_n:total = S_n Copper wire* + S_n Measurement device + S_n Reserve**

Example: S_n total = 3.50 VA + 0.2 VA + 1 VA
S_n total = 4.70 VA (corresponds to the standardized value of 5 VA)

* Determination of the burdern
** S_n reserve < 0.5 x (Sn copper line + S_n measuring instruments)

Fig.: Calculation of the rated power S_n (copper wire, 10 m)

ACCURACY CLASSES

Current transformers are divided into classes according to their accuracy. Standard accuracy classes are 0.1; 0.2; 0.5; 1; 3; 5; 0.1S; 0.2S; 0.5S. The class symbol corresponds to an error curve with respect to current and angular errors.

The accuracy classes of current transformers are related to the measured value. If current transformers are operated with a low current in relation to the primary current, the measuring accuracy drops significantly. The following table shows the error limits taking into account the primary current values:

ACCURACY CLASS	CURRENT ERROR Fj IN % AT % OF THE RATED CURRENT					
	1%	5%	20%	50%	100%	120%
5				5		5
3				3		3
1		3	1.5		1	1
0.5		1.5	0.75		0.5	0.5
0.5 S	1.5	0.75	0.5		0.5	0.5
0.2		0.75	0.35		0.2	0.2
0.2 S	0.75	0.35	0.2		0.2	0.2

We always recommend using current transformers with the same accuracy class for the UMG measurement devices. Current transformers with a lower accuracy class result in a higher measuring accuracy in the overall system – current transformer + measurement device – which in this case is defined by the accuracy class of the current transformer. However, the use of current transformers with a lower measuring accuracy than the measurement device is technically possible. As a recommendation, transformers of class 0.5S should be used for billing-relevant measurements.

CURRENT TRANSFORMER ERROR CURVE

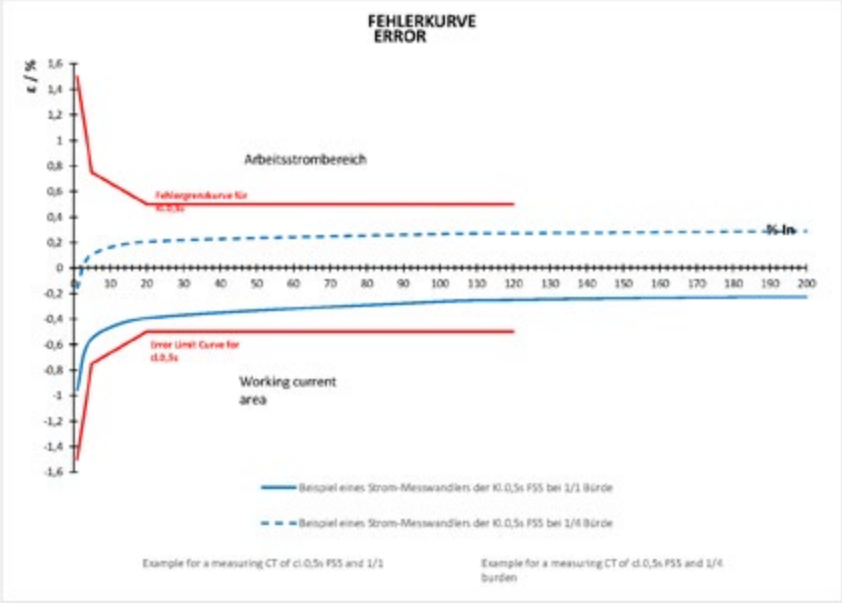

MEASUREMENT TRANSFORMER VS. PROTECTION TRANSFORMER

Whereas measurement transformers should saturate as quickly as possible above their operating current range (expressed by the overcurrent factor FS) in order to prevent the secondary current from increasing in the event of a fault (e.g. short-circuit) and thus protect the connected devices, protection transformers should go into saturation as far outside this range as possible.

Protection transformers are used for system protection purposes in conjunction with the appropriate switchgear. Standard accuracy classes for protection transformers are 5P and 10P. "P" here stands for "protection". The nominal overcurrent factor is placed (in %) after the protection class designation. For example, 10P5 means that at 5 times the primary current, the negative secondary side deviation from the value that would be expected on the basis of the ratio (linear) is at most 10%.

The use of measurement transformers is strongly recommended for the operation of UMG measurement devices.

TRANSFORMER STANDARD RAIL SIZES

TYPE	PRIMARY CURRENTS IN A	RAIL SIZE IN mm	ROUND HOLE
PLUG-IN CURRENT TRANSFORMERS			
IPA30	60 – 600	30 x 10 20 x 20	23
IPA30.5	40 – 300	30 x 10 20 x 20	23
IPA40	75 – 1000	40 x 10 30 x 15	30
IPA40.5	60 – 1000	40 x 10 30 x 15	30
4R21.3	40 – 500	-	21
6A315.3	50 – 750	30 x 10 20 x 20	28
6A412.3	150 – 800	40 x 10 2 x 30 x 10	33
7A412.3	60 – 1000	40 x 10 2 x 30 x 10	33
7A412.6	60 – 400	40 x 10 2 x 30 x 10	33
7A512.3	150 – 1000	50 x 10 2 x 40 x 10 2 x 30 x 10	42
8A512.3	150 – 1500	50 x 10 2 x 40 x 10 2 x 30 x 10	42
8A615.3	200 – 1600	60 x 10 2 x 50 x 10 2 x 40 x 10 3 x 30 x 10	52
9A615.3	200 – 2500	60 x 10 2 x 50 x 10 2 x 40 x 10 3 x 30 x 10	53
9A640.3	200 – 2000	2 x 60 x 10 3 x 50 x 10	61

SPECIAL VERSION	
Deviating primary rated current	On request
Deviating secondary rated current	On request
Deviating construction design	On request
Deviating rated frequency	On request
Enhanced class accuracy and continuous load capacity	On request
Type-approved / calibrated transformers	On request
1.2 kV temperature range	On request

CONSTRUCTION TYPE OF CURRENT TRANSFORMERS

FEEDTHROUGH CURRENT TRANSFORMERS

The conductor to be measured (busbar or cable) is passed through the opening and forms the primary circuit of the feedthrough current transformer. Feedthrough current transformers are mainly used for mounting on busbars. Through additional potting is it possible to achieve droplet resistance as well as higher shock and vibration resistance under mechanical stress (IEC 68). This is the most common current transformer design, but has the disadvantage that the primary conductor must be interrupted during installation. In other words, this transformer design is primarily used when setting up new systems.

SEPARABLE CURRENT TRANSFORMERS

Separable transformers are often used in retrofit applications. With these transformers, the transformer cores can be opened for installation and can thus be mounted around the busbars. This allows mounting without interrupting the primary conductor. It should be noted that separable current transformers are in principle not suitable for billing purposes.

SPLIT CORE TRANSFORMERS

Split core transformers are only suitable for mounting on insulated primary circuit conductors (feeder cables) in a weather-protected and dry location. Mounting is possible without interrupting the primary conductor.

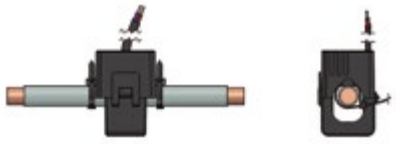

Fig.: Split core transformers

DIN RAIL TRANSFORMERS WITH INTEGRATED BACK-UP FUSE

The DIN rail current transformer is a very compact special design with integrated voltage tap. DIN rail current transformers consists of a terminal block, current transformer and the voltage tap-off terminal with a fuse. The fuse is mounted directly on the primary conductor, meaning the unprotected part of the measuring lead is very short. This ensures a high level of intrinsic safety. The DIN rail current transformer provides simple wiring, low installation costs and higher reliability due to fewer connections, reduced space requirements and fewer connection errors.



Fig.: DIN rail transformer

CURRENT TRANSFORMER INSTALLATION

INSTALLATION ORIENTATION

Determine the direction of energy flow in the cable that you want to measure. P1 denotes the side where the power source is located, while P2 denotes the consumer side.

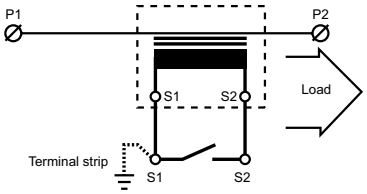

Fig.: Installation orientation

TERMINALS S1/S2 (K/L)

The terminals of the primary winding are marked with "P1" and "P2" ("K" and "L") and the terminals of the secondary winding are marked with "S1" and "S2" ("k" and "l"). The polarity must be such that the "energy flow direction" runs from "P1" to "P2".

Inadvertently swapping the terminals S1/S2 leads to erroneous measurement results and can also cause incorrect control behaviour with PFC systems.

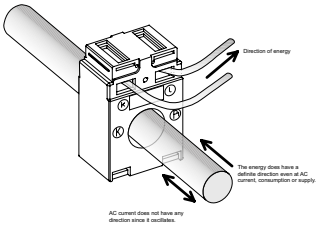

Fig.: Installation orientation of current transformers

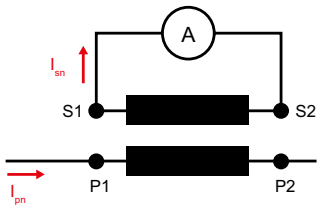

Fig.: Energy flow direction

LINE LENGTH AND CROSS SECTION

The power consumption (P in W) caused by the line losses is calculated as follows:

$$P = \frac{\rho \times l \times I^2}{A}$$

- Resistivity
  for CU: 0.0175 Ω *mm² / m
  for Al: 0.0278 Ω * mm² / m

l = line length in m (outward and return line)
I = current in amperes
A = cable cross section in mm²

QUICK REFERENCE (POWER CONSUMPTION, CU WIRE) FOR 5 A AND 1 A:

For every 10°C change in temperature, the power absorbed by the cables increases by 4%.

POWER CONSUMPTION IN VA AT 5 A										
NOMINAL CROSS SECTION	1 M	2 M	3 M	4 M	5 M	6 M	7 M	8 M	9 M	10 M
2.5 mm²	0.36	0.71	1.07	1.43	1.78	2.14	2.50	2.86	3.21	3.57
4.0 mm²	0.22	0.45	0.67	0.89	1.12	1.34	1.56	1.79	2.01	2.24
6.0 mm²	0.15	0.30	0.45	0.60	0.74	0.89	1.04	1.19	1.34	1.49
10.0 mm²	0.09	0.18	0.27	0.36	0.44	0.54	0.63	0.71	0.80	0.89

POWER CONSUMPTION IN VA AT 1 A										
NOMINAL CROSS SECTION	10 M	20 M	30 M	40 M	50 M	60 M	70 M	80 M	90 M	100 M
1.0 mm²	0.36	0.71	1.07	1.43	1.78	2.14	2.50	2.86	3.21	3.57
2.5 mm²	0.14	0.29	0.43	0.57	0.72	0.86	1.00	1.14	1.29	1.43
4.0 mm²	0.09	0.18	0.27	0.36	0.45	0.54	0.63	0.71	0.80	0.89
6.0 mm²	0.06	0.12	0.18	0.24	0.30	0.36	0.42	0.48	0.54	0.60
10.0 mm²	0.04	0.07	0.11	0.14	0.18	0.21	0.25	0.29	0.32	0.36

EXAMPLE OF TRANSFORMER POWER AND LINE LENGTH			
SECONDARY CURRENT = 1 A WIRE = 0.75 MM² CONVERTER POWER / CABLE LENGTH		SECONDARY CURRENT = 5 A CABLE = 2.5 MM² CONVERTER POWER / CABLE LENGTH	
CLASS 0.5	CLASS 1	CLASS 0.5	CLASS 1
0.5 VA / 5 m	0.5 VA / 5 m	0.5 VA / 0.7 m	0.5 VA / 0.7 m
1 VA / 15 m	1 VA / 15 m	1 VA / 2.1 m	1 VA / 2.1 m
2.5 VA / 47 m	1.5 VA / 26 m	2.5 VA / 6 m	2.5 VA / 6 m
5 VA / 100 m	2.5 VA / 47 m	5 VA / 13 m	5 VA / 13 m
10 VA / 205 m	5 VA / 100 m		10 VA / 27 m
	10 VA / 200 m		20 VA / 55 m
	20 VA / 400 m		

SERIES CONNECTION OF MEASUREMENT DEVICES TO A CURRENT TRANSFORMER

Pv = UMG 1 + UMG 2 +....+ PLine + PTerminals ....?

PARALLEL OPERATION / SUMMATION CURRENT TRANSFORMER

If the current measurement is made using two current transformers (e.g. 2 transformers), the total ratio of the current transformers must be programmed in the device. When measuring via summation current transformers, the same phase must be used.

Example: Both current transformers have a ratio of 1,000 / 5A. The summation measurement is performed with a summation current transformer 5+5/5 A.

The UMG must then be set as follows:

Primary current:	1000 A + 1000 A = 2000 A
Secondary current:	5 A (with a measured 2,000 A, 5 A are output on the secondary side)

CURRENT TRANSFORMER GROUNDING

In connection with the increased use of electronic measuring systems – in accordance with the transformer standard DIN EN 61869 – grounding for transformers of nominal voltages of 0.72 kV and 1.2 kV is no longer required, nor is it prohibited. Grounding usually results from the functional design of the measuring systems. However, grounding can be done at the S1(k) terminal or S2(k) terminals. Important: always ground on the same side and only on one side!

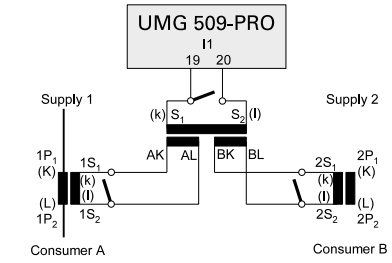

Fig.: UMG 509-PRO current measurement summation transformer

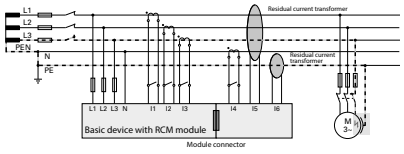

Fig.: Connection example for residual current monitoring with a UMG 96-PA basic device with module

OPERATION OF CURRENT TRANSFORMERS

OPERATION OF CURRENT TRANSFORMERS

Replacing a measurement device (short-circuiting of current transformers)

The current transformer secondary circuit should not be opened under any circumstances when current is flowing in the primary circuit.

The output of the current transformer represents a current source. Therefore, as the load increases, the output voltage increases (according to the relationship U = R x I) until saturation is reached. Above saturation, the peak voltage continues to rise with increasing distortion and reaches its maximum value at infinite load, i.e. open secondary terminals. This means that on an open transformer, high voltage peaks can occur which pose a danger to people and can destroy the transformer as well as the measurement device when reconnecting. It follows that open operation must be avoided and the transformer must be short-circuited on the secondary side for safety reasons.

CURRENT TRANSFORMER TERMINAL BLOCK WITH SHORT-CIRCUIT DEVICES

Special terminal strips for DIN rails are recommended for short-circuiting current transformers and for purposes of recurring comparative measurement. These consist of a cross disconnect terminal with measuring and test equipment, insulated bridges for grounding and short circuiting the transformer terminal.



Fig.: Current transformer terminal strip

OVERLOAD

Primary current overload:
Primary current too high –> Saturation of the core material –> Accuracy drops dramatically –> Thermal transformer damage possible

Rated power overload:
Too many measurement devices or lines that are too long are connected to a transformer with its defined nominal power –> Saturation of the core material –> Secondary current becomes too small –> Accuracy drops dramatically

INSTANCE OF A SHORT CIRCUIT

In the event of a short circuit, there is no longer a signal and the measurement device can no longer measure. Current transformers can (or must) be short circuited if no load (measurement device) is connected.

OPERATION WITH HARMONICS

Our transformers generally measure harmonics up to 2.5 kHz (50th harmonic), and many types also measure up to 3 kHz and even beyond. However, at higher frequencies, eddy current losses increase and thus so does heating. If the harmonics content becomes too great, current transformers with thinner sheets must be used.

However, it is not possible to make any general statement about a limit value for the harmonics content, since the heating depends on the core size, transformer surface (cooling), ambient temperature, ratio, etc.

OWN POWER REQUIREMENT OF UMGS, ENERGY METERS, MEASUREMENT DEVICES

MEASUREMENT DEVICE TYPE	POWER CONSUMPTION CURRENT MEASUREMENT INPUT IN VA
Analog ammeter	1.1
UMG 103-CBM / 604-PRO / 605-PRO	0.2
UMG 96RM	0.2
UMG 96RM-E	0.2
UMG 509-PRO	0.2
UMG 512-PRO	0.2
ECSEM Series Energy Meters	0.36

POWER CONSUMPTION OF UMG 96RM-E PER CURRENT INPUT	
UMG 96RM-E	0.2 VA
	+
4 meters of 2-wire cable, 2.5 mm²	1.64 VA
	=
Gives the power consumption of the measurement device	1.84 VA

THE SPECIAL CASE: LARGE TRANSFORMER – LOW CURRENT

Tip:
Select a current transformer suitable for measuring a rated current of 50 A.

To divide the normal current of a current transformer by two, it is in fact sufficient to pass this current through the transformer twice.



Stromwandler 50 / 5 A, Imax = 50 A

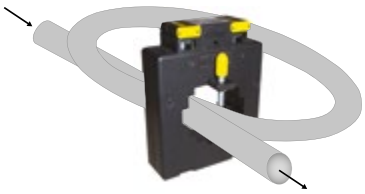

Äquivalent zu einem Wandler 100 / 5 A, Imax = 50 A

COMMUNICATION VIA THE RS-485 INTERFACE

When it comes to cost-effective networking of measurement devices, the RS-485 interface with the Modbus RTU protocol is still the measure of all things. The simple topology structure, the insensitivity to EMC interference and the open protocol have characterized the combination of RS-485 with the Modbus RTU protocol for years. The complete name of the RS-485 standard is TIA / EIA-485-A. The last revision was in March 1998 and the standard was confirmed in 2003 with no changes whatsoever. The standard only defines the electrical interface conditions of the transmitters and receivers, but says nothing about the topology or the lines to be used. This information can be found either in the TSB89 "Application Guidelines for TIA / EIA-485-A" or in the application descriptions of the RS-485 driver module manufacturers such as Texas Instruments or Maxim. According to the OSI model (Open Systems Interconnection Reference Model)*, only the "physical layer" is described, but not the protocol. The protocol used may be freely selected, such as Modbus RTU, Profibus, BACnet, etc. The communication between the transmitter and receiver is wired via a shielded twisted pair cable. Only one pair of wires should be used for A and B (Fig.: image 1a). If the interface is not galvanically isolated, the common connector must also be used (Fig.: image 1b). More on this later.

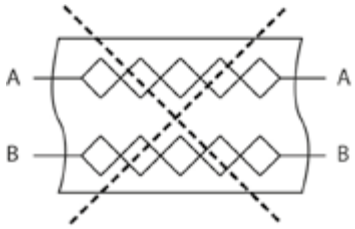

Fig.: Figure 1a

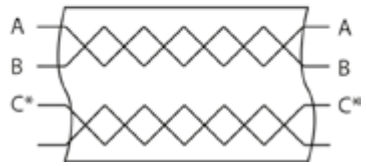

Fig.: Figure 1b

The data is transmitted by a differential, serial voltage level between lines [A] and [B]. Since data is transmitted on the lines between the transmitter and receiver, this is also referred to as half-duplex or alternating operation. Each receiver or transmitter has an inverting and non-inverting port. The transmission of the data is symmetrical. That is, if one line has a "high" signal, the other line has a "low" signal. Line A is thus the complement of B and vice versa. The advantage of measuring the voltage difference between A and B is that common-mode interference has almost no influence. Any common-mode interference is coupled in approximately equally on both signal lines, and due to the differential measurement, they therefore have no influence on the data to be transmitted. The transmitter (driver) generates a differential output voltage of at least 1.5 V into a 54 Ω load. The receiver has a sensitivity of +/-200 mV (Fig. image 2).

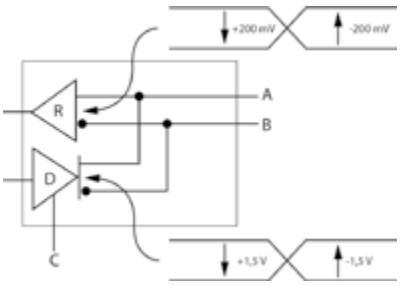

Fig.: Figure 2

THE LOGIC HERE IS AS FOLLOWS (FIG. IMAGE 3):

A-B < 0.25 V = logical 1
A-B > 0.25 V = logical 0

The labeling of the ports A / B is often not uniform. What is A for one manufacturer may be B for the next. Why is that?

THE DEFINITION SAYS:

A = "-" = T x D - / R x D - = inverted signal
B = "+" = T x D + / R x D + = non-inverted signal

A third line "C" = "Common" is also specified.
This line is for the reference ground.

** Open Systems Interconnection Reference Model (OSI): Driver = Transmitter; Receiver = Receiver; Transceiver = Transmitter / Receiver*

However, some RS-485 chip manufacturers such as Texas Instruments, Maxim, Analog Devices, etc. have used a different designation since the beginning, which is now also common:

A = "+" = T x D + / R x D + = non-inverted signal
B = "-" = T x D - / R x D - = inverted signal

Due to this confusion, some device manufacturers have introduced their own designation:

D+ = "+" = T x D + / R x D + = non-inverted signal
D- = "-" = T x D - / R x D - = inverted signal

The designation [+] and [-] after the letter [D] clearly shows which line represents the inverted and the non-inverted signal.

Janitza electronics GmbH mainly uses transceiver ICs from Texas Instruments, Analog Devices or Maxim. For this reason, all our measurement devices have the following designation:

A = "+" = T x D + / R x D + = non-inverted signal
B = "-" = T x D - / R x D - = inverted signal

THE VOLTAGES ARE DEFINED IN THE DATA SHEETS AS FOLLOWS:

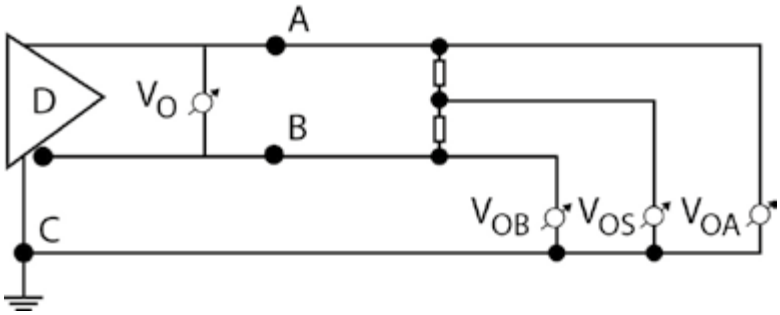

VO = Differential voltage A - B
VOB = Voltage between B and C
VOA = Voltage between A and C
VOS = Driver offset voltage

Fig.: Figure 4

THE VOLTAGE VCM

The voltage VCM (Common Mode Voltage) is the sum of the GND potential differences between the RS-485 nodes (Fig.: image 5), the driver offset voltage and the common mode noise voltage (Vnoise) acting on the bus line. The RS-485 driver manufacturers specify a voltage range of –7 to 12 V for VCM. In case of communication problems, this voltage range is often violated due to potential differences between transmitter and receiver if the interface is not galvanically isolated or no common line exists. Figure 6 shows the calculation of the "Common mode" voltage.

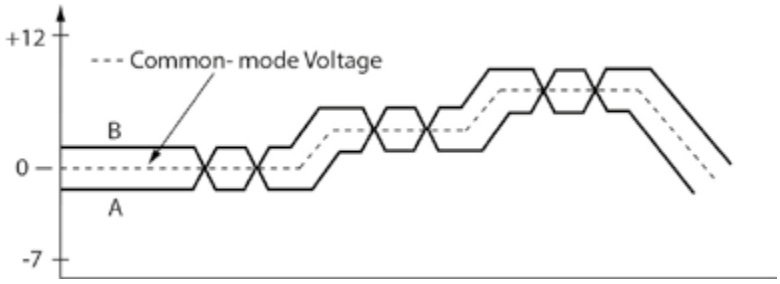

Fig.: Figure 5

$$V_{OS} = \frac{V_{OA} + V_{OB}}{2}$$

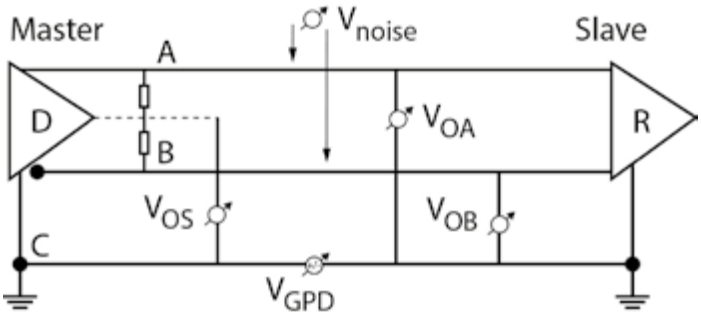

Fig.: Figure 6

$$V_{CM} = V_{OS} + V_{noise} + V_{GPD}$$

V_{GPD} (Ground potential differences)

V_{GPD} is the potential difference between transmitter and receiver GND (PE). Potential differences between the connections (grounds) often occur when the RS-485 bus is very extensive spatially. These potential differences occur especially in older electrical installations, because often there is no meshed potential equalization. Furthermore, especially in the event of lightning influences, the potential difference between the PE connections in the distributions can become hundreds or thousands of volts. Even under normal conditions, potential differences of a few volts may exist due to compensating currents of the consumers. Vnoise (common mode noise) is an interference voltage that can have the following causes:

- Interference voltage induced by a magnetic field on the bus line

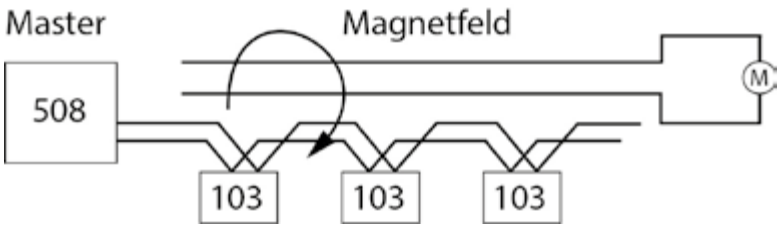

Fig.: Figure 7

- Capacitive coupling for system parts that are not galvanically isolated ("parasitic capacitances")

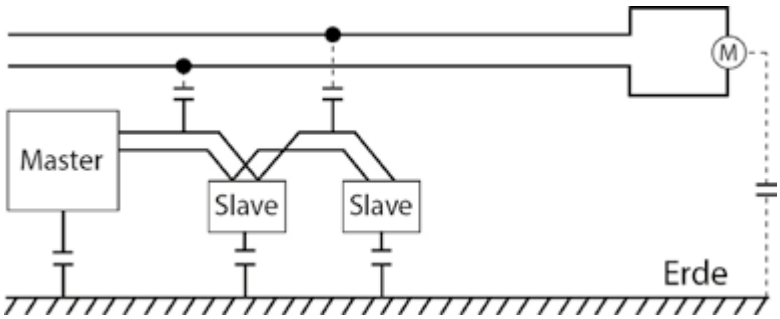

Fig.: Figure 8

- Galvanic coupling
- Radiant coupling
- Electrostatic discharge

BUS TOPOLOGY

The bus is "multipoint-capable", and up to 32 stations can be connected without a repeater. The best network topology is "daisy chain". This means that the bus cable goes directly from slave to slave.

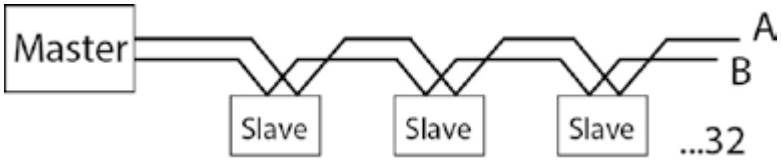

Fig.: Figure 9

It should be noted that stub lines should generally be avoided. Stub lines cause reflections on the bus. Theoretically, a possible stub line could be calculated in dependence on the transceiver used, but this is too complex in practice. The length of a possible stub depends strongly on the signal rise time of the transceiver used and should be smaller than 1/10 of the signal rise time of the driver. The higher the possible baud rates of the transceiver, the smaller the signal rise times of the driver. This means that you need to know which IC has been installed in the bus stations. In addition, the signal speed of the cable is also included in the calculation. For this reason, you should generally avoid stub lines.

TERMINATION

Another cause of communication interference is bus reflections. A reflection occurs when the transmitter signal is not completely absorbed by the load. The source impedance should be the same as the load impedance and the line characteristic impedance, as this will provide full signal power and minimize reflections. RS-485 serial communication works most efficiently when the source and load impedance are matched at 120 ohms. For this reason, the RS-485 standard recommends a bus line with a line characteristic impedance of Z_0 = 120 Ω. To avoid reflections on the bus, the bus line must be provided with a termination resistor at the beginning and at the end which corresponds to the line characteristic impedance.

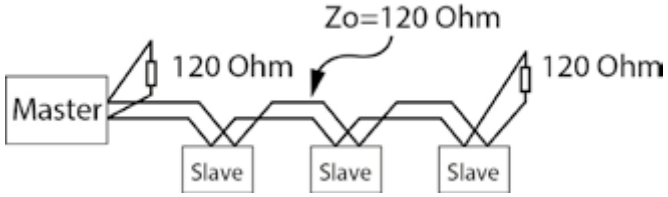

Fig.: Figure 10

"FAILSAFE BIAS" RESISTORS

If the receiver inputs are in the range of –200 mV to +200 mV, the output of the receiver module is undefined, i.e. no evaluation of the RS-485 signal can take place.

THIS IS THE CASE UNDER THE FOLLOWING CONDITIONS:

- No transmitter is active
- The bus line has been interrupted (e.g. line break)
- The bus line is short-circuited (e.g. line damaged etc.)

Under these conditions, the RS-485 bus must be brought into a defined signal state. Some communication buses do not have these problems, because here, for example, there is only one transmitter which controls the line. Either the transmitter is active or it is not. With the RS-485 bus, however, since it is multipoint capable, a number of transmitters can be connected.

To make the signal state unambiguous under the above conditions, one usually uses a "pull up" resistor between +5 V and signal line A and a "pull down" resistor between GND and signal line B. The resistors can theoretically be placed anywhere on the bus, but are usually placed near the master in a voltage divider network with a termination resistor, since ready-made connectors are available for this purpose.

Some manufacturers only recommend installing a termination resistor at the beginning and at the end to avoid reflections (see the section Termination or Bus structure UMG 604-PRO with UMG 103-CBM). Why is that?

In this case, the manufacturers have used transceivers for the RS-485 interface that already have an internal failsafe bias built into the chip, i.e. at 0 V at the receiver input, the output automatically has a logical "high" state, for example. With Maxim (as used in the UMG 604-PRO and UMG 103-CBM) the function is called " ". An external failsafe bias is then only necessary if stations that do not have this function are connected to the same bus. Incidentally, the bus load is not affected by the "True fail-safe" function.

THE "COMMON CONNECTION" OR "GALVANICALLY ISOLATED"

The bus stations usually obtain their supply voltage from different areas of the electrical installation. Particularly in older electrical installations, this can result in considerable potential differences between the groundings. For error-free communication, however, the voltage Vcm must only be in the range of -7 to +12 V, i.e. the voltage V_{GPD} (ground potential differences) must be as small as possible (Fig. 11 a, Fig. 5). If the RS-485 interface is not galvanically isolated from the supply voltage, the common connection must be included (Fig. 11 b). However, the connection of the common terminals can result in a current loop, i.e. without an additional measure, a high equalizing current flows between the bus stations and the grounding. This is usually prevented by the developers by decoupling the GND of the RS-485 interface from the ground by a 100 ohm resistor (Fig. 11 c).

A better alternative is the galvanic isolation of the RS-485 interface from the supply voltage by an internal DC/DC converter and a signal isolator. Potential differences in the grounding then have no influence on the signal. The differential signal thus "floats". Better yet is the galvanic isolation of the RS-485 interface in combination with a common connection.

Figure 12 shows a mixed operation between stations with galvanically isolated and non-isolated interfaces. The stations with galvanically isolated RS-485 interfaces have no common connection in the example. In this case, make sure that the common ports of the subscribers are connected to each other. Nevertheless, communication interference may occur due to EMC coupling capacitors. This results in the non-galvanically isolated stations no longer being able to interpret the signal. In this case, the bus must be separated and an additional galvanic coupling must be integrated between the station circuits.

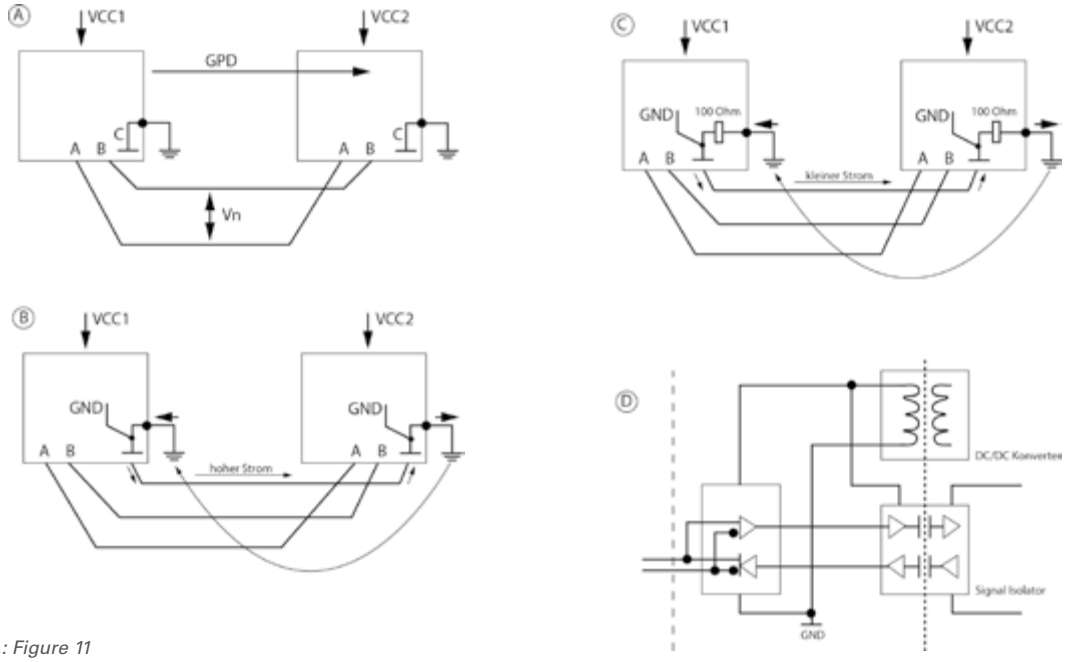

Fig.: Figure 11

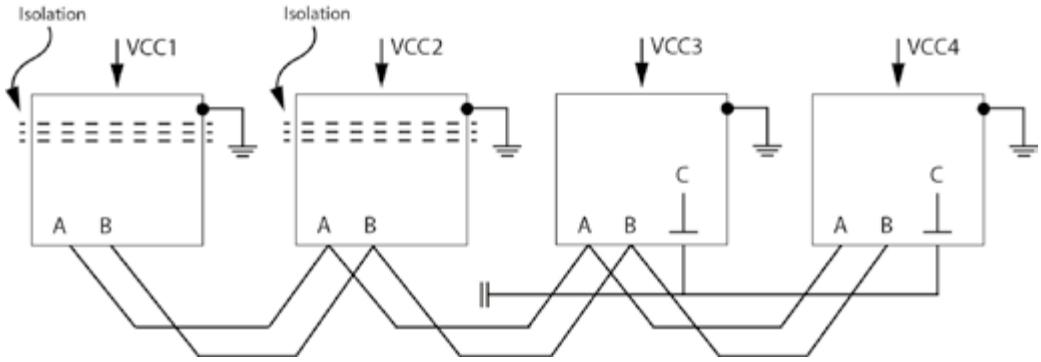

Fig.: Figure 12

Note: The shielding must never be connected to the common connector of the RS-485 interface. This would couple interference directly into the GND of the RS-485 transceivers.

ANALYSIS AND OPTIMIZATION OF RS-422 AND RS-485 BUS SYSTEMS

OUR RECOMMENDATION: MSB-RS-485 ANALYZER – THE PERFECT COMBINATION OF HARDWARE AND SOFTWARE ANALYSIS

- Independent analyzer device, controlled and powered via USB
- Fast realtime signal/data processing via hardware
- Provides data on any line change with microsecond accuracy
- Equipped with a variety of visualization tools, it allows a detailed view into any RS-422/485 communication system
- Detects bus-enable errors, timeouts, or incorrect/duplicate addressing
- Variable connection types allow the complete logging of all bus activities as well as the targeted recording of data sent by selected bus stations
- HV-side independent time recording of all events with 1 µs resolution
- Simultaneous display of both the tri-state signal levels and the transmitted data
- Detection of inactive bus states and invalid line levels
- Measurement and use of ALL baud rates from 1...1 MBaud
- Automatic acquisition of baud rate, data bits and parity
- Supports 9-bit data word protocols



Available from www.iftools.com

PORTS, PROTOCOLS AND CONNECTIONS

UMG 604-PRO / UMG 605-PRO	
PROTOCOLS	**PORTS**
TFTP	1201
Modbus / TCP – Modbus / UDP	502, 4 ports
DHCP	68
NTP	123
BACnet	47808
Name service	1200
HTTP	80
FTP	21
FTP data port	1024, 1025
FTP data port	1026, 1027
Modbus via Ethernet	8000, 1 port
Service port (Telnet)	1239
SNMP	161 / 162 (TRAP)
Email port (current)	25
Email port (being prepared)	587

UMG 103-CBM	
PROTOCOLS	**PORTS**
Device does not have an Ethernet port	Device does not have an Ethernet port

GridVis®	
PROTOCOLS	**PORTS**
Modbus / TCP – Modbus / UDP	502
HTTP	80
FTP	21
FTP data port	1024, 1025
FTP data port	1026, 1027
Modbus / TCP	502
Modbus via Ethernet	8000
Read out Telnet data port	1239
Update Telnet data port	1236, 1237
Email port (preparation)	25
Email port (preparation)	587

NUMBER OF TCP/UTP CONNECTIONS (UMG 604-PRO / 605-PRO)

- A total of max. 24 connections are possible via the TCP group.
  The following points apply:
  - Port 21 (FTP): max. 4 connections
  - Port 25/587 (e-mail): max. 8 connections
  - Port 1024-1027 (data port to any FTP port): Max. 4 connections
  - Port 80 (HTTP): max. 24 connections
  - Port 502 (Modbus TCP/IP): Max. 4 connections
  - Port 1239 (debug): max. 1 connection
  - Port 8000 (Modbus or TCP/IP): max. 1 connection

- Connectionless communication via the UTP group
  - Port 68 (DHCP)
  - Port 123 (NTP)
  - Port 161/162 (SNMP)
  - Port 1200 (name service)
  - Port 1201 (TFTP)
  - Port 47808 (BACnet)

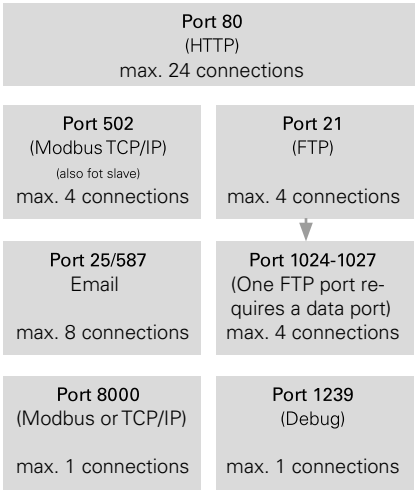

Fig.: TCP group: max. 24 connections (queue scheduling) (UMG 604-PRO / 605-PRO)

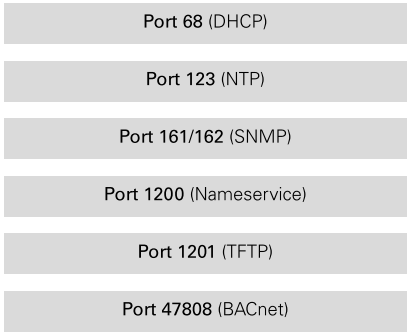

Fig.: UTP group: connectionless communication (UMG 604-PRO / 605-PRO)

The UMG 96RM-E supports the following protocols via Ethernet connection

CLIENT SERVICES	PORTS
DNS	53 (UDP / TCP)
DHCP client (BootP)	68 (UDP)
NTP (client)	123 (UDP)
Email (send)	Selectable (1-65535 TCP)

SERVER SERVICES	PORT
Ping	(ICMP / IP)
FTP	20 (TCP)*, 21 (TCP)
HTTP	80 (TCP)
NTP (listen only)	123 (UDP broadcast)
SNMP	161 (UDP)
Modbus TCP	502 (UDP / TCP)
Devices identification	1111 (UDP)
Telnet	1239 (TCP)
Modbus RTU (Ethernet encapsulated)	8000 (UDP)

** Random port (> 1023) for data transmission if working in PASSIVE mode.*

The UMG 96RM-E can manage 20 TCP connections.

Client services are contacted by the device to a server via the specified ports; server services are provided by the device.

The following protocols are not supported.

BACnet (47808 / UDP)

PREREQUISITE AND CONFIRMATION FOR COMMISSIONING (VBI)

GENERAL

The Prerequisites and Confirmation for Commissioning (VBI) serves the purpose of preparation and preliminary information for commissioning by Janitza electronics GmbH. A confirmation of the correct electrical installation as well as the technical prerequisites for the installation of the software is required before commissioning.

ELECTRICAL INSTALLATION OF JANITZA MEASUREMENT DEVICES IN GENERAL

- **Access:** All devices must be fully functional (auxiliary voltage, connection etc.) with unhindered access to interface, connection and display.
- **Interfaces:** The bus connection of the devices to each other and to the PC must be properly and functionally wired. Information on the connection of the interfaces and wiring can be found in the associated operating manual.
- **Wiring:** No stub line has been created on the RS-485 interface (see graphic). That is, all devices have been connected to the power analyzer in series.
- **Bus cable:** A bus cable has been used for the RS-485 wiring. The cable must be shielded and the wires (A&B) must be twisted together. We recommend the following bus cable: Li2YCY(TP)2x2x0.22).
- **Master:** The following structure has been adhered to in the bus lines: The master (UMG 604-PRO / UMG 605-PRO / UMG 96RM-E) is the first station on the bus.
- **RS-485:** For the UMG 604-EP, UMG 605-PRO, UMG 96RM-P, UMG 509-PRO and UMG 512-PRO, the necessary Profibus connector for the RS-485 interface has been used. The Profibus connector is mandatory because the RS-485 interface is designed for the internal termination resistor.
- **Setup plan:** A setup plan of the bus connections for all stations must have been given to the responsible technician in advance by email or fax (support@janitza.de).

- **Transformer setting:** The CT settings must have been made by the customer. If setting the transformers is part of the commissioning (see specifications), a device list with name-related transformer data must be given to the responsible technician in advance.

- **IP addresses:** The device names and IP addresses must be defined and documented and must be given to the responsible technician before commissioning.

- **Settings:** For measurement devices with an Ethernet connection, the IP addresses must be assigned. If setting the IP address is part of the commissioning (see specifications), a device list with IP address, subnet mask and gateway must be given to the responsible technician in advance.

- **Termination resistor:** A 120 Ω termination resistor must be set at the beginning and end of a bus line between A and B. Devices with a Profibus connector must be switched ON.

- **Connection:** After connecting the measurement devices, the following measured values must be checked:
  – The active power of the individual phases should be positive. If this is not the case, there is a power feed or a faulty connection (k and l reversed)
  – The cos phi of the individual phases should be above a realistic value of 0.5 (guide value). If this is not the case, the phase assignments of the current and voltage measurement must be checked. The current and voltage connection must be assigned to the phases correctly.

- **Database:** The MySQL / MS SQL database must be installed and administered.

For commissioning, it is important that a local, responsible electrician / installer be on site during commissioning.

SOFTWARE INSTALLATION AND NETWORK ADMINISTRATION

The following points show the prerequisites as well as features of the GridVis® evaluation and configuration software (version 4) from Janitza electronics GmbH.

- **GridVis® license:** The activation of GridVis® requires an account on the Janitza ID server (https://id.janitza.de). The account should be created by the responsible person before commissioning. The Standard and Expert editions require an activation code. The activation code can be purchased from Janitza electronics GmbH. Internet access is required for activation.

- **PC/Server Requirements:**
  - Processor architecture
    - Processor with 2 CPU cores (2 GHz or faster)
    - SSE3 capable (Intel/AMD processor manufactured after 2005)
  - RAM: Min. 8 GB (standard database)
    - Recommended: 16 GB (MySQL, MSSQL database
  - Installation memory space: 4 GB
  - Measurement data storage space: Depending on the number of measurement data, storage depth as well as archiving period
  - 64-bit syste
  - Recommended and optimized screen resolution: 1920 x 1080 pixels (Full HD)

- **Supported web browsers:**
  - Google Chrome (current version) - recommended
  - Microsoft Edge
  - Firefox (current version)
  - IE 11 is **not** supported

- **Supported operating systems:**

64-bit / no ARM support
  - Microsoft Windows Server 2016
  - Microsoft Windows Server 2019
  - Microsoft Windows Server 2022
  - Microsoft Windows 10
  - Microsoft Windows 11

64-bit only
  - Linux distributions on request and for large projects only

- **Databases:**
  - MSSQL - recommended
    - MSSQL 2014, 2016, 2017, 2019 and 2022 are supported
    - Express versions are not supported!
  - MySQL 8.0
  - JanDB - included in the scope of delivery

- **Virtual maschines:**

Restrictions for virtual machines are unknown.
  - Citrix environments are not supported!

	GridVis® ESSENTIALS	GridVis® STANDARD	GridVis® EXPERT	GridVis® CLOUD
SYSTEM FUNCTIONS				
Device configuration	•	•	•	–
Server-based service	–	•	•	–
Software as a Service (SaaS)	–	–	–	•
HTTPS encryption	–	•	•	•
User management	–	•	•	•
Alarm management	–	–	•	–
Monitoring of device communication	–	•	•	•
Database (MySQL, MSSQL)	–	•	•	–
Key performance indicators	–	–	•	–
Automation	–	•	•	–
Sending e-mails	–	–	•	•
Software-based measured value recording	–	•	•	•
VISUALIZATION				
Customized dashboards	–	•	•	–
Static dashboards	–	–	–	•
Sankey diagram	–	–	•	–
Hierarchy management	–	•	•	•
Customized list function	–	•	•	–
Energy and measured value analysis	•	•	•	–
Event/transient analysis	•	•	•	–
REPORTS AND EXPORTS				
Basic package	•	•	•	–
RCM (residual current monitoring)	•	•	•	–
Power quality	•	•	•	–
Energy monitoring	–	•	•	•
Energy management	–	•	•	–
Customized reports	–	–	•	–
CONNECTIVITY				
Data import (CSV & MSCONS)	–	•	•	–
Data export (MSCONS)	–	–	•	–
REST API	–	•	•	–
OPC UA Client	–	–	•	–
Third-party Modbus devices	–	–	•	•

Further information about the GridVis® Editions can be found here:
https://www.janitza.com/en/products/gridvis/editions

- **Databases:**
  – MSSQL – recommended:
  MSSQL 2014, 2016, 2017 and 2019 are supported.
  Express versions are not supported!
  – MySQL (5.7.22 & 8.0.16)
  – JanDB – included in the scope of delivery

- **Database information:**
  – The database users need read and write permissions
  – The database structure is generated by GridVis® when the project is created
  – To be able to create a project requires owner rights
  – The user "root" or "SA" should not be used for GridVis® projects
  – The database structure is open and documented

- **Standard database:**
  The Janitza DB as the standard database can only be used locally; multiple access is only possible locally (e.g. GridVis® service in the background and GridVis® Desktop on the same computer/server).

- **Installation directories:**
  The installation directory is freely selectable. If multiple users need access, the installation and the project must be located in a directory area where access rights are given to all users.

- **Project directory:**
  The project directory must be located only locally on the computer/server. It is not possible to place the project directory on a network drive.

- **Port information:**
  The following communication ports are required for data transfer between the measurement device and the software:
  – HTTP 80
  – FTP command port 21 (data port 1024, 1025, 1026, 1027)
  – Modbus/TCP 502 (4 ports)
  – NTP 123

The following communication ports could be used in addition:
  – SNMP 161
  – BACnet 47808

- **Automatic memory readout:**
  The GridVis® software versions have an automatic readout function as of GridVis® Standard which can be activated (installation of GridVis® Service).

- **GridVis® Service information:**
  – Service instances can be installed as of the GridVis® Standard Edition.
  – Automatic memory readout as of GridVis® Standard Edition and online readout as of GridVis® Expert Edition are taken over by the Service in the background.
  – A Service instance supports the management of approx. 300 measurement devices
  – The web server port of the Service instance can be changed during installation.
  – The Service is managed by Windows and does not require a user to log in. During a restart, the Service is restarted as well.

- **Online readout:**
  The GridVis® software offers a means for recording and archiving measured values online. This function can be used for measurement devices without a ring buffer (memory), for example. The polling time is configurable. Online readout is available as of the GridVis® Expert edition.

- **Server-client principle:**
  Multiple access to a database depends on the database type. The Janitza database supports only local access. MySQL and MS SQL databases support multiple accesses. However, the read and write permission must be assigned to a GridVis® Desktop instance or a GridVis® Service instance.

- **NTP – Time synchronization:**
  Some Ethernet measurement devices have an NTP client for time synchronization. These meters support the following modes:
  – Active (IP is addressed directly)
  – Listen (broadcast)

Time synchronization without an NTP server can be performed with the computer time as of the GridVis® Standard Edition.

- **Historical evaluation:**
  A historical evaluation (time period evaluation) requires devices with a ring buffer (memory). An alternative is the GridVis® Expert Edition in which the online recording can be used for archiving.

Administrative rights are required for the installation during commissioning. Internet access should be available for the GridVis® activation. It is recommended that a responsible person from the IT department be present on site during commissioning to clarify any questions directly.

SPECIAL INFORMATION FOR THE ELECTRICAL INSTALLATION OF JANITZA MEASUREMENT DEVICES

If commissioning includes the ProData® 2 (consumption pulse recording), the following points must be noted:

- **Special information on ProData® 2:**
  For ProData® 2 (consumption data recording of water/heat quantities, etc.), the pulse valencies must be known before commissioning and must also be sent to the responsible technician in advance by e-mail.

Example: ProData® 2

Digital input 1 = outbuilding water meter = 1 m^3 per pulse
Digital input 2 = main building heat meter = 1 kWh per pulse
etc.

INSTRUCTION

After commissioning, the operating personnel should be instructed concerning the GridVis® evaluation and configuration software. This briefing should take place on the computer that has been set up with access to all measurement points. The briefing includes the following topics:

- Software navigation
- Configuration of the measurement devices
- Evaluation of historical data (graph, reports)
- Creation of the topology
- Managing automatic readout / time setting

CONTENT OF THE COMMISSIONING (REQUIREMENT SPECIFICATION)

The commissioning tasks are clearly defined. Tasks that are not part of the standard commissioning must be included separately in the order. The number of measurement points to be included and the number of software instances to be installed must be defined before the commissioning.

- Number of measurement points
- Number of GridVis® Desktop instances
- Number of GridVis® Service instances

Standard commissioning tasks:

- **Installation:**
  Install current GridVis® software (create project, import project)

- **Configuration:**
  – Integration of all Janitza measurement points into the GridVis® software (connection configuration)
  – Configure the device application specifically (pulse outputs, alarm outputs)
  – Configure automatic readout / online readout
  – Software / firmware update

- **Instruction on the GridVis® software:**
  – Device management
  – Graph function
  – Topology creation

Additional commissioning services:

- **Configuration:**
  – Make all CT settings
  – Assign device addresses and IP addresses

- **Configuration:**
  – Create customer-specific topology
  – Integrate customer-specific Jasic® programs
  – Troubleshooting, support
  – Creation of virtual measurement points

It is recommended that the responsible electrician / installer be present on site during commissioning in order to clarify any questions directly. In addition, it would be desirable for the operator of the system to be present for instruction. All points should be completed to ensure smooth commissioning.



INFORMATION



466 Logistics information

LOGISTICS INFORMATION

INDIVIDUAL PACKAGING						
TYPE	DIMENSIONS in mm (W x H x D)	NET DEVICE WEIGHT in g	GROSS DEVICE WEIGHT IN g (ready for shipping including packaging and operating manual, etc.)	DEVICE TPYE	NUMBER OF DEVICES IN THE PACKAGING	ITEM NO.
Individual packaging 1	180 x 90 x 140	300	400	UMG 96-S2 / UMG 96-EL	1	**3101035**
Individual packaging 1	180 x 90 x 140	500	600	UMG 96RM / -M, ProData®	1	**3101035**
Individual packaging 1	180 x 90 x 140	200	300	UMG 103-CBM / UMG 800	1	**3101035**
Individual packaging 2	180 x 140 x 170	400	800	UMG 96RM-P / -PN / -CBM / -E, UMG 96-PA / UMG 96-PQ-L	1	**3101034**
Individual packaging 2	180 x 140 x 170	300	800	UMG 604-PRO / UMG 605-PRO	1	**3101034**
Individual packaging 2*1	180 x 140 x 170	1500	1700	UMG 509-PRO / UMG 512-PRO / UMG 801	1	**3101034**
Individual packaging 3	318 x 86x 68	730	850	Modul 800-CT12	1	**3101066**

*1 This packaging is not suitable for individual shipment of the UMG 509-PRO, UMG 512-PRO and UMG 801; this takes place with outer box 1.

PACKAGING SIZES CARDBOARD										
				TOTAL WEIGHT IN g WITH THE RESPECTIVE DEVICE TYPE*3				TOTAL WEIGHT IN g WITH THE RESPECTIVE DEVICE TYPE*3		
Type	Dimensions in mm (W x H x D)	Packaging weight in g (outer box / pallet)	Max. number of individual packaging 1 (see Table 1)	UMG 96-S2 / UMG 96-EL	UMG 96RM / -M, ProData®	UMG 103-CBM / UMG 800	Max. Anzahl der Einzel-verpackung 2 (siehe Tab. 1)	UMG 96RM-P / -PN / -CBM / -E, UMG 96-PA / UMG 96-PQ-L	UMG 604-PRO / UMG 605-PRO	UMG 509-PRO / UMG 512-PRO / UMG 801
			1				2			
Outer box 1 (3101053)	245 x 180 x 170	200	2	700	950	550	1	950	800	1650
Outer box 2 (3101020)	305 x 215 x 180	240	4	1400	1900	1100	2	1900	1600	3300
Outer box 3 (3101013)	400 x 300 x 250	460	10	4200	6000	3400	4	5000	3500	6900
Outer box 4 (3101002)	550 x 400 x 240	700	18	7700	11000	6300	8	8500	7100	13900
Outer box 5 (3101008)	440 x 395 x 390	900	26	10800	15500	8700	12	12400	10300	20400
Outer box 6 (3101004)	700 x 400 x 400	1320	40	16600	23800	13400	20	20500	17000	33800
Outer box 7 (3101009) on a disposable pallet*2	800 x 600 x 400	2160	72	34600	47600	28900	34	39600	33800	62600
Outer box 8 (3101028) on a disposable pallet*2	1180 x 780 x 760	3860	280	123100	1754000	102600	128	140200	118400	226000

*2 Disposable pallets are IPPC certified.
*3 The total weight specified for each type is categorized. Individual packaging 1 and 2 is also used outer boxes.

PACKAGING SIZES CARDBOARD BOX FOR 10-DEVICE PROJECT PACKAGING (ITEM NO.: 3101052)						
SHIPPING PACKAGING				TOTAL WEIGHT IN g WITH THE RESPECTIVE DEVICE TYPE		
TYPE	DIMENSIONS IN mm (W X H X D)	MAX. QUANTITY	10 % ACCESSORIES (PCS.) INSTRUCTIONS	UMG 96-S2 / UMG 96-EL	UMG 96RM / -M, ProData®, UMG 96-PA, UMG 96-PQ-L	UMG 103-CBM / UMG 800
Outer box 4 (3101002)	550 x 400 x 240	40 (4 x 10 Stk.)	4	12000	14000	8000
Outer box 5 (3101008)	440 x 395 x 390	60 (6 x 10 Stk.)	6	17000	21000	12000
Outer box 6 (3101004)	700 x 400 x 400	90 (9 x 10 Stk.)	9	26000	31000	17000
Outer box 7 (3101009) on a disposable pallet*1	800 x 600 x 400	150 (15 x 10 Stk.)	15	49000	57000	34000
Outer box 8 (3101028) on a disposable pallet*1	1180 x 780 x 760	840 (84 x 10 Stk.)	84	260000	305000	176000

– Dimensions project packaging (W x H x D in mm): 225 x 105 x 315.
– Only devices of the same type can be delivered in the project packaging.
**1 Disposable pallets are IPPC certified.*

PACKAGING SIZES CARDBOARD BOX FOR 12-DEVICE PROJECT PACKAGING (ITEM NO.: 3101051)						
SHIPPING PACKAGING				TOTAL WEIGHT IN g WITH THE RESPECTIVE DEVICE TYPE		
TYPE	DIMENSIONS IN mm (W X H X D)	MAX. QUANTITY	10 % ACCESSORIES (PCS.) INSTRUCTIONS	UMG 96RM-CBM / -P	UMG 96RM-E / UMG 96RM-PN / UMG 96-PA / UMG 96-PQ-L	UMG 604-PRO / UMG 605-PRO
Outer box 4 (3101002)	550 x 400 x 240	24 (2 x 12 pcs.)	3	11000	12000	10000
Outer box 5 (3101008)	440 x 395 x 390	36 (3 x 12 pcs.)	4	17000	17000	15000
Outer box 7 (3101009) on a disposable pallet*1	800 x 600 x 400	96 (8 x 12 pcs.)	10	50000	51000	45000
Outer box 8 (3101028) on a disposable pallet*1	1180 x 780 x 760	468 (39 x 12 pcs.)	47	235000	238000	210000

– Dimensions 12-device project packaging with foam inserts (W x H x D in mm): 450 x 150 x 330.
Only devices of the same type can be supplied in the project packaging.
– Project packaging includes 100 % patch cables and 10 % additional accessories! Mounting kits are 100 % enclosed with the device.
**1 Disposable pallets are IPPC certified.*

INDEX

FRONT PANEL INSTALLATION MEASUREMENT DEVICES

UMG 509-PRO		**Page 92**
UMG 512-PRO		**Page 100**
UMG 96-EL		**Page 34**
UMG 96-PA series		**Page 48**
UMG 96-PQ-L seies		**Page 80**
UMG 96RM series		**Page 40**
UMG 96RM-E		**Page 72**
UMG 96-S2		**Page 28**

INDEX

DIN RAIL MEASUREMENT DEVICES

MID Energy Meters		**Page 178**
RCM 201-ROGO		**Page 172**
RCM 202-AB		**Page 166**
UMG 103-CBM		**Page 110**
UMG 604-PRO		**Page 152**
UMG 605-PRO		**Page 160**
UMG 800		**Page 116**
UMG 801		**Page 124**

INDEX

OPERATING CURRENT TRANSFORMER

Compact current transformers		**Page 248**
DIN rail current transformers with voltage tap-off & back-up fuse		**Page 246**
Flexible current transformers		**Page 250**
Low-power current transformers		**Page 224**
Plug-in current transformers		**Page 208**
Plug-in current transformers for billing purposes		**Page 220**
Separable current transformers		**Page 242**
Split core current transformers		**Page 238**
Summation current transformers	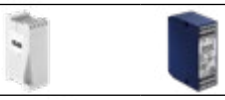	**Page 234**
Three-phase current transformers		**Page 244**

INDEX

RESIDUAL CURRENT TRANSFORMER

Plug-in residual current transformers		Page 264
Residual current transformers, Type A		Page 266
Residual current transformers, Type B+		Page 268
Separable residual current transformers	 	Page 260

RESIDUAL CURRENT TRANSFORMER ACCESSORIES

Current transformer terminal strip		Page 275
Voltage tap-offs	  	Page 272

INDEX

ACCESSORIES

Adapter for DIN rail mounting		**Page 284**
EasyGateway V50 LTE modem		**Page 276**
Gateway M-BUS-GEM		**Page 278**
Janitza Universal Gateway JUG 25		**Page 274**
PowerToStore		**Page 279**
Switching power supply for DIN rail mounting		**Page 280**
Switching power supply with stepped/circuit-breaker design		**Page 281**
USB/RS-485 converter cable		**Page 283**

INDEX

MEASUREMENT DATA ACQUISITION

ProData		**Page 291**

SOFTWARE

Database Server		**Page 324**
GridVis®	GridVis®	**Page 300**
Jasic®	Jasic®	**Page 332**
Device Homepage		**Page 330**
Multiprotocol Server	OPC FOUNDATION	**Page 320**

Disclaimer

The contents, performance features and diagrams provided in this catalogue are not always reflective of the actual case in their described form and may also be subject to change due to ongoing product developments. The text and images contained herein have been generated with due care and diligence. However, it is not possible to fully exclude errors from arising. The desired performance features are only binding if these are expressly agreed upon conclusion of the contract. Subject to technical change and delivery amendments.

The trade names, brand names and trade descriptions etc. provided in this catalogue are subject to the guidelines of the respective manufacturer.

Janitza electronics GmbH does not guarantee to keep this catalogue up-to-date.

Further up-to-date information can be found at www.janitza.com

The General Terms and Conditions (GTCs) of Janitza electronics GmbH can be found at https://www.janitza.com/standard-terms-and-conditions.html

ABOUT JANITZA

Janitza develops comprehensive energy measurement solutions that ensure transparent energy flows and monitor power quality. The global company, headquartered in Germany, provides individual solutions to meet specific customer requirements across a wide range of industries, including data centers, manufacturing, buildings & infrastructure, utilities, and renewable energy.

PRODUCT RANGE

Janitza's portfolio includes innovative measuring devices and the perfectly integrated Power Grid Monitoring Software GridVis®, complemented by high-quality components. Customers worldwide benefit from solutions in energy data management, power quality monitoring, and residual current monitoring, all within a unified system environment – Made in Germany.

HEADQUARTER

Janitza | Germany
Vor dem Polstück 6
35633 Lahnau
Phone: +49 6441 9642-0
Email: anfragen@janitza.de

www.janitza.com

GLOBAL

Janitza | USA
Phone: +1 888 526 4892
Email: sales-us@janitza.com

Janitza | Mexico
Phone: +52 56 6674 4808
Email: sales-mx@janitza.com

Janitza | UK
Phone: +44 7939 697 434
Email: sales-uk@janitza.com

Janitza | Austria
Phone: +43 7942 214 966 194
Email: anfragen-at@janitza.com

Janitza | Australia
Phone: +61 411 544 114
Email: sales-au@janitza.com

Janitza | India
Phone: +91 900 387 6980
Email: sales-in@janitza.com

Janitza

Item no.: 3303753 ▪ Doc. no.: 2.500.082.9I ▪ Last update 12/2025 ▪ Subject to technical alternations.

© This content is published by Janitza electronics GmbH ▪ Vor dem Polstück 6 ▪ 35633 Lahnau, Germany