optec
energie ist messbar
Optec AG | Guyer-Zeller-Strasse 14
CH-8620 Wetzikon ZH | T. +41 449330770
E-Mail: info@optec.ch - www.optec.ch

IIST444-01 - 19-02-2025

GB



Code	Model
HC.ECSOP66-V	M3PRO 80 Modbus V MID

Three phase energy meter, direct connection 80 A with MID declaration of conformity and Modbus RTU communication.

MID certification concerns active energy only.

User instructions.

Safety instructions

Read this manual carefully BEFORE installing the instrument.

This device must be installed indoor only by a professional electrician fitter according to local applicable installation standards.

Do not plug in or unplug this product when the power supplying is ON. Its use is only permitted within the limits shown and stated in the installation instructions. The device and the equipement connected can be destroyed by loads exceeding the values stated.

Any type of intervention on the products, including cases in which they cease to function or present defects, can be dangerous for the operator's safety and relieves the Manufacturer from all civil and criminal liability.

Function

This 4 quadrants Modbus RTU meter measures the active energy used in an electrical installation. This device can manage 2 tariffs by 230 VAC digital input.
Only the total active energy register can be used for billing purposes according to measuring instrument directive (MID).
- Active Energy Class B (according to EN 50470-3:2022)
- Active Power Class 1 (according to IEC 62053-21:2020 and IEC 61557-12:2018).

This device has a backlighted LCD and 4 push-button keys to read Energies, V, I, PF, F, P, Q and to configure some parameters. The design and manufacture of this meter comply with Standard EN 50470-3:2022 requirements.

Power factor
Convention according to IEC 62053-23:2020

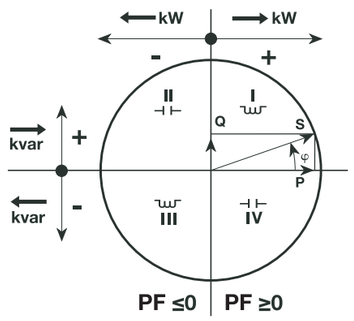

Layout of device

LCD display

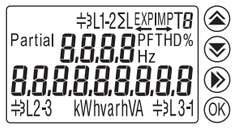

Σ Energy for all tariffs

T8 Tariff

Reactive power inductive/ capacitive

L2 Phase indicator



Main Energy Register, not resettable

kWhkvarh
kVA ms Hz

Units

Energy import (consumption →)
Energy export (production ←)

Commands

- **UP button:** to scroll pages and change parameters
- **DOWN button:** to scroll pages and change parameters
- **MENU/ESC button:** to change menu and stop modification procedure of a parameter
- **OK button:** to confirm the modification of a parameter

MID certified

A) Device code and certification data indications

B) Safety-sealing between upper and lower housing part

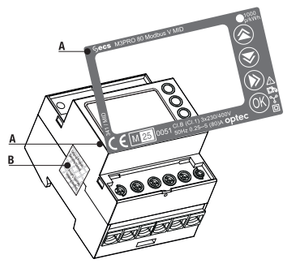

Dimensions

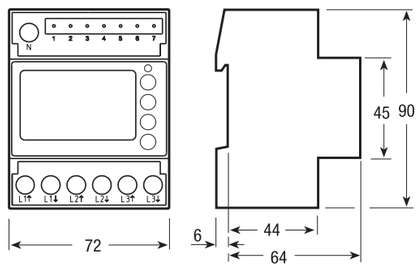

Sealable terminal cover

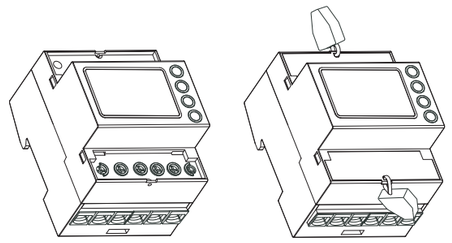

Wiring

Modbus protocol
The Modbus protocol operates on a master/slave structure:
- Reading
- Writing

The communication method is RTU (Remote Terminal Unit) with hexadecimal.

Important
It is essential to connect a resistance of 120 Ohms at the 2 ends of the connection.

Intended use
The Energy Meter is suitable for use on both impedance grounded networks and not grounded networks.

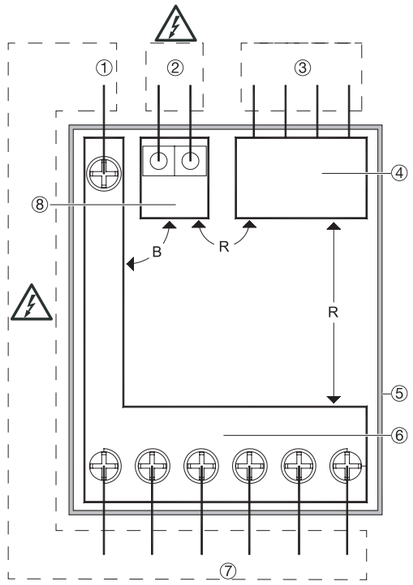

There are no accessible parts

Legend:

B =	Basic insulation
D =	Double insulation
R =	Reinforced insulation
F =	Functional insulation
①	**HLV TERMINAL,** 1 terminal for neutral
②	**HLV TERMINAL,** 2 terminal for tariff input
③	**SELV TERMINALS,** 4 terminals or 2RJ45 connectors
④	**SELV CIRCUIT,** (communication) working voltage <25 Vac, <60Vdc
⑤	PLASTIC CASE (NOT EARTHED)
⑥	**HLV CIRCUIT,** (mains) Working Voltage = 300 Vac
⑦	**HLV TERMINAL,** 1 terminal for neutral
⑧	**HLV CIRCUIT,** (tariff input) working voltage = 300 Vac

Installation and uninstallation

The disconnectors (reference ① and ② in the wiring diagram) must be easy to identify and to operate and must be close to the Meter. They both must be in "OFF" position (open circuits) from the beginning to the end of the installation or of the uninstallation. The Energy Meter, the disconnectors and the overload current protection devices must be easily identifiable, must be installed in an adequate cabinet (IP51 and V1) and it must be easy to intervene on them whenever appropriate. Inside the cabinet, do not install any other device with a flammability class worse than V1.

Commissioning

Recommendations
Check the following before putting it into service:
- Make sure that no dangerous voltages are connected to the SELV terminals.
- Make sure that a phase has not been connected to the Neutral terminal (this would cause the internal protections to intervene with permanent damage to the Meter).
- Check that the main page appears on the display (see menu description) and not the Phase Sequence Error page.

Maintenance

- Make sure that no voltage is applied to the instrument.
- Only dry cleaning is allowed with a natural fiber cloth (for example cotton or linen) or synthetic fabric that does not leave residual fibers that can remain on the surface of the Energy Meter or that can penetrate into the Energy Meter.

For this Energy meter, no maintenance, repair or replacement of parts is foreseen. Such interventions are to be considered prohibited. In case of malfunction, it must be replaced.

Help in case of problems

Error condition
When the display shows the message ERROR N02 or ERROR N03, the meter has got a malfunction and must be replaced.

Diagnostic message



The cabling sequence (L1-L2-L3) is wrong. L1, L2 and L3 icons blink. Invert the voltage wires of 2 phases (phase 1 < > phase 2 or phase 2 < > phase 3). Otherwise, by pressing the «OK» button for at least 5 seconds, the message disappears until the next restart.

Notes

Wiring diagram

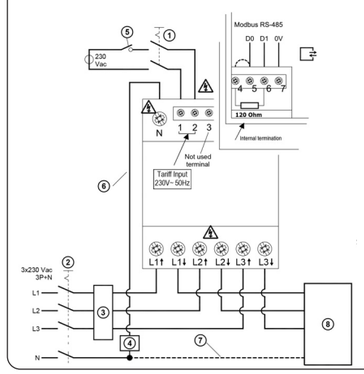

① Bipolar disconnector 230Vac
② Four-pole disconnector 3X230Vac, 3P+N.
The disconnectors must be clearly labelled and must be easily accessible by the installer
③ 3 fuses or 3 circuit breakers
④ Fuse or circuit breaker in series with the neutral conductor, to be adopted in case the source neutral is not earthed. The installer is responsible for coordinating the rating and the characteristics of the supply side overcurrent protection. The devices must be correctly sized with respect to the installation voltage, the maximum overcurrent applicable to the meter and the fault current available. The following parameters are to be taken into consideration:
- Maximum current = 80A
- Maximum Overload current = 96A
- Maximum Voltage = 276 Vac

⑤ Control circuit for the tariff: Open contact: Tariff 1, Close contact: Tariff 2
⑥ The connection of the Neutral to the Energy Meter is strictly MANDATORY. Failure to connect affects not only the quality of the measurements, but also electrical safety.
⑦ The connection of the Neutral to the load is not mandatory. However, consider that in a 3P + N network, if the Neutral is not connected to the load, the measurements referred to L1, L2 and L3 no longer have any meaning. Only the 3-phase (ΣL) measurements remain significant.
⑧ 3 wires or 4 wires electrical load.
Connection to the neutral is MANDATORY

Cable section. Cable stripping length
Screwdriver type. Maximum terminal screw torque
Adopted cables shall retard flame propagation.
Cables must therefore comply with IEC 60332-1-2:2004 or have a flammability rate UL 2556 VW-1

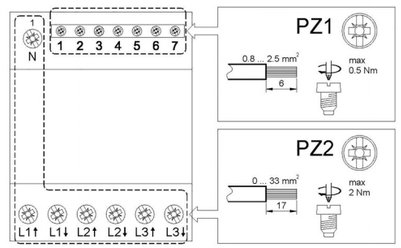

General Menu

Main Menu

Three Phase Energies List (Reactive energy not available)

Main Page

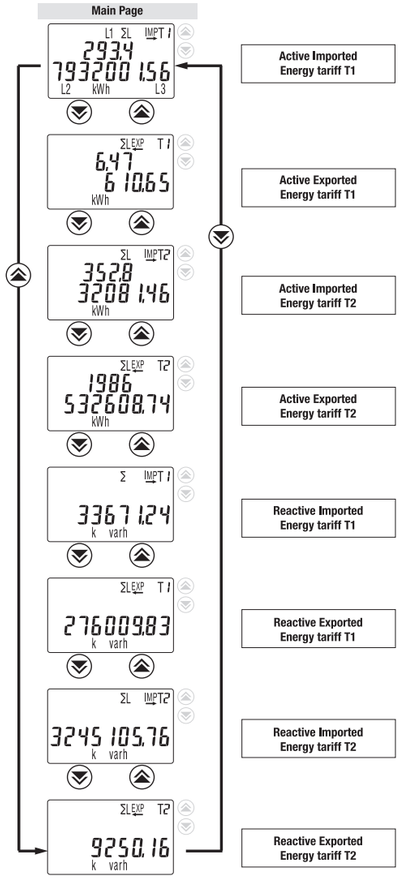

Selection Menu

By Pushing ⏩ from Any page of Main Menu

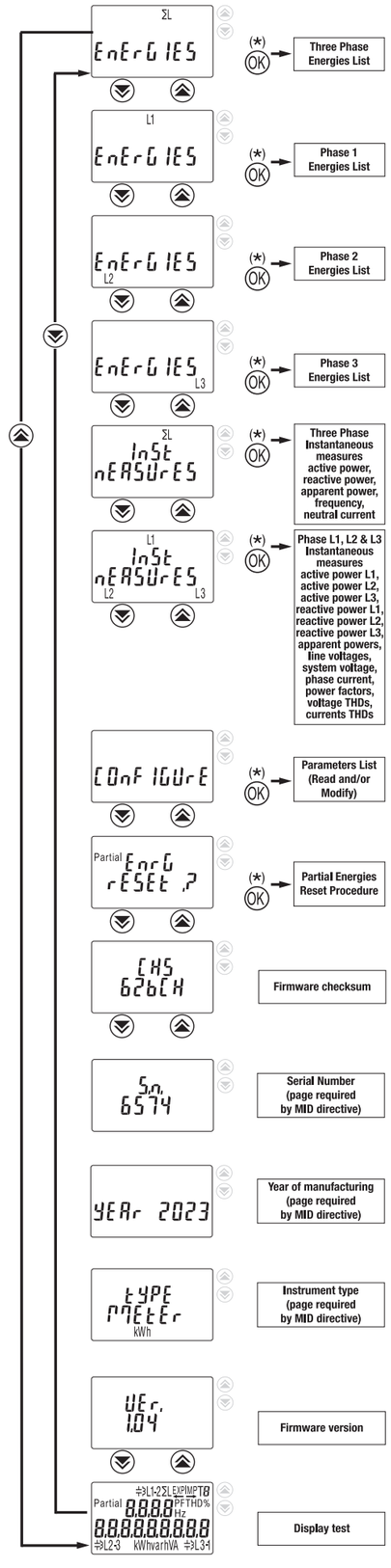

Password

In Configure Menu it is possible to protect the access to sub-menues of Selection Menu by a password.



Password can be enabled (ON password) or disabled (OFF password), the default value is OFF

Once request, to enter the password user must push both UP button and DOWN button at the same time for 4 seconds

Parameters in models with Modbus on-board



- Modbus Address
  Selectable in the range 1 ... 247.
- The default address is 1.

- Modbus Baud rate
  Available Baud Rates are: 1200, 2400, 4800, 9600, 19200, 38400 and 57600
- The default baud rate is 19200.

- Modbus Parity.
  Available Parity are None, Even and Odd
- The default Parity is None.

- Modbus Number of Stops Bits (1 or 2).
- The default number of Stop Bits is 1

- Password Enabled/Disabled

Technical data

Data in compliance with EN 62052-11:2021+A11:2022, EN 62052-31:2016-06, EN 50470-3:2022, EN 62059-32-1:2012

General characteristics			
Housing	DIN 43880	**DIN**	4
Mounting	EN 60715	**DIN rail**	35 mm
Depth		**mm**	64
Weight		**g**	424
Operating features			
Connection	to three-phase network - number of wires	**-**	4
Storage of energy values and configuration	Internal flash non volatile memory	**-**	☑
Tariff	for active and reactive energy	**-**	T1 … T2 230V
Approval (EN 50470-3:2022)			
Reference Voltage **(Un)**	phase / neutral	**VAC**	230
	phase / phase	**VAC**	400
Nominal Current **(In)**		**A**	5
Transition Current **(Itr)**		**A**	0.5
Minimum Current **(Imin)**		**A**	0.25
Maximum Current **(Imax)**		**A**	80
Starting Current **(Ist)**		**A**	0.015
Reference Frequency **(fn)**		**Hz**	50
Number of phases / number of wires		**-**	3 / 4
Certified Measures		**kWh kWh**	kWh
Accuracy			
- Active Energies (accord. to EN 50470-3:2022)		**classe**	B / 1
- Active Powers (accord. to IEC 62053-21:2020 and IEC 61557-12:2018)			
Supply Voltage and Power Consumption			
Operating Supply Voltage range		**V**	92 … 276 / 160 … 480
Maximum Power Consumption (Voltage circuit)		**VA / W**	≤2 / 0.6
Maximum VA burden (Current circuit) @ **Imax**		**VA**	≤2
Voltage Input Waveform		**-**	AC
Voltage impedance		**MΩ**	1
Current impedance		**mΩ**	≤20
Overload capability			
Voltage	continuous phase / neutral	**VAC**	276
	temporary (1 s) phase / neutral	**VAC**	300
	continuous phase / phase	**VAC**	480
	temporary (1 s) phase / phase	**VAC**	800
Current	Maximum	**A**	96
	temporary (10 ms)	**A**	2400
Measuring Features			
Voltage range	phase / neutral	**VAC**	184 … 276
	phase / phase	**VAC**	320 … 480
Current range		**A**	0.25 … 80
Frequency range		**Hz**	45 … 65
Measured Quantities		**-**	V, A, kWh, PF, Hz, kW
3 phases Energy calculation		**-**	WELMEC
Display features			
Display type	LCD with backlight	**-**	7.2 +3.2
Active Energy	7 digits + 2 decimal digits	**kWh**	0.01 … 99999999.9
Voltage	3 digits + 1 decimal digit	**V**	92.0 … 276.0
Current	2 digits + 2 decimal digits / 3+1 / 4+0	**A**	0.00 … 80.00
Power factor	1 digit + 3 decimal digits with sign + capac./induc. indic.	**-**	-1.000 … 1.000
Frequency	2 digits + 2 decimal digits	**Hz**	45.00 … 65.00
Active Power	2 digits + 2 decimal digits	**kW**	0.00 … 22.08
Display refresh period		**s**	1
Optical metrological LED			
Front mounted red LED (meter constant)	proportional to active imp/exp Energy	**imp/kWh**	1000
Safety			
Utilization category		**-**	UC2
Overvoltage category		**-**	3
Protective class		**classe**	II
AC voltage test		**kV**	4
Degree of pollution		**-**	2
Operational voltage		**V**	300
Impulse voltage test **(Uimp)**		1.2/50 µs-kV	6.4
Housing material flame resistance	UL 94	**classe**	V0
Safety-sealing between upper and lower housing part	-	☑	
Printed circuit board flammability class		**-**	V1
Material Group		**-**	IIIa
Embedded Modbus communication			
Physical interface	RS-485 - 3 wires	**-**	-, +, 0
Internal termination resistor		**-**	120 Ω
Baud rate	adjustable	**bps**	1200 … 57600
Parity	adjustable: Odd, Even, None	**-**	☑
Stop Bit	adjustable	**-**	1, 2
Address	adjustable	**-**	1 … 247
Isolation class	SELV	**-**	☑
Tariff			
Tariff 1		**-**	☑
Tariff 2		**VAC**	230 ±20%
Input impedance		**kΩ**	224
Environmental conditions			
Storage temperature range		**°C**	-40 … +85
Operating temperature range		**°C**	-25 … +55
Mechanical environment		**-**	M1
Electromagnetic environment		**-**	E2
Installation	indoor only	**-**	☑
Altitude (max.)		**m**	≤2000
Humidity	yearly average, without condensation	**-**	≤75%
	on 30 days per year, without condensation	**-**	≤95%
IP rating	in built-in condition (front part)	**-**	IP51
	terminal block	**-**	IP20
Emission class compatibility CISPR 32		**classe**	B