Product overview

Measuring and monitoring relays



Design the future of energy

BENDER

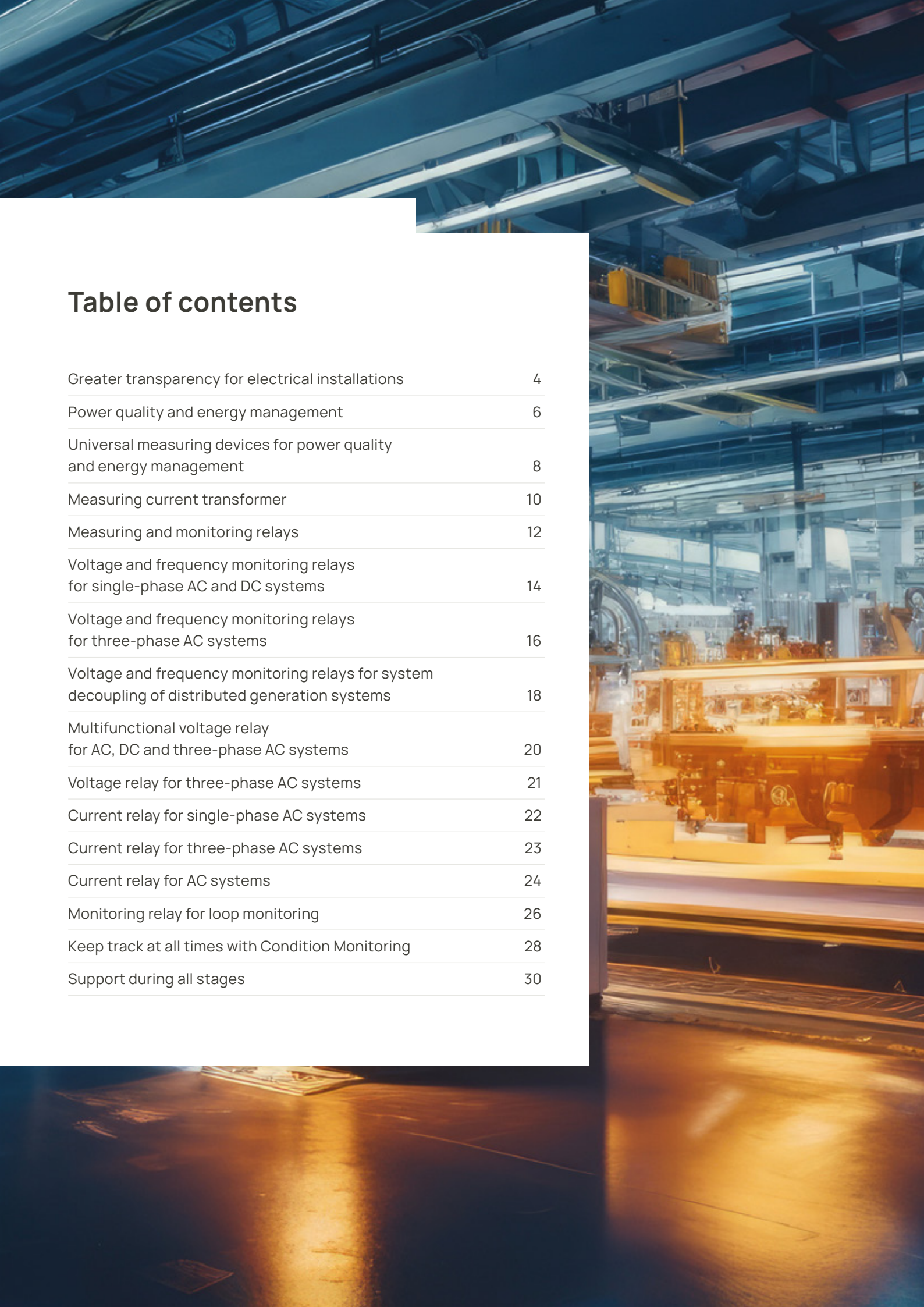

Table of contents

Greater transparency for electrical installations	4
Power quality and energy management	6
Universal measuring devices for power quality and energy management	8
Measuring current transformer	10
Measuring and monitoring relays	12
Voltage and frequency monitoring relays for single-phase AC and DC systems	14
Voltage and frequency monitoring relays for three-phase AC systems	16
Voltage and frequency monitoring relays for system decoupling of distributed generation systems	18
Multifunctional voltage relay for AC, DC and three-phase AC systems	20
Voltage relay for three-phase AC systems	21
Current relay for single-phase AC systems	22
Current relay for three-phase AC systems	23
Current relay for AC systems	24
Monitoring relay for loop monitoring	26
Keep track at all times with Condition Monitoring	28
Support during all stages	30



Greater transparency for electrical installations

In today's power supply network, the increased use of modern power electronics is leading to increasingly frequent power disturbances. This is caused by non-linear equipment such as frequency converters, switch-mode power supply or electronic ballasts. Typical power supply disturbances include harmonics, changes in the RMS value of the voltage, or fluctuations in luminance (known as flicker).

High levels of harmonics in the operating current can cause cable and wiring systems to become overloaded, which may even lead to a fire. If there is a risk of the neutral conductor becoming overloaded due to harmonic distortion, DIN VDE 0100-430 recommends installing an overload detection device for the neutral conductor. The effectiveness of such measures depends on the operating condition of the installation. An assessment can only be carried out by continuously monitoring the harmonic content and measuring the operating currents in order to ensure the long-term safe operation of the system.

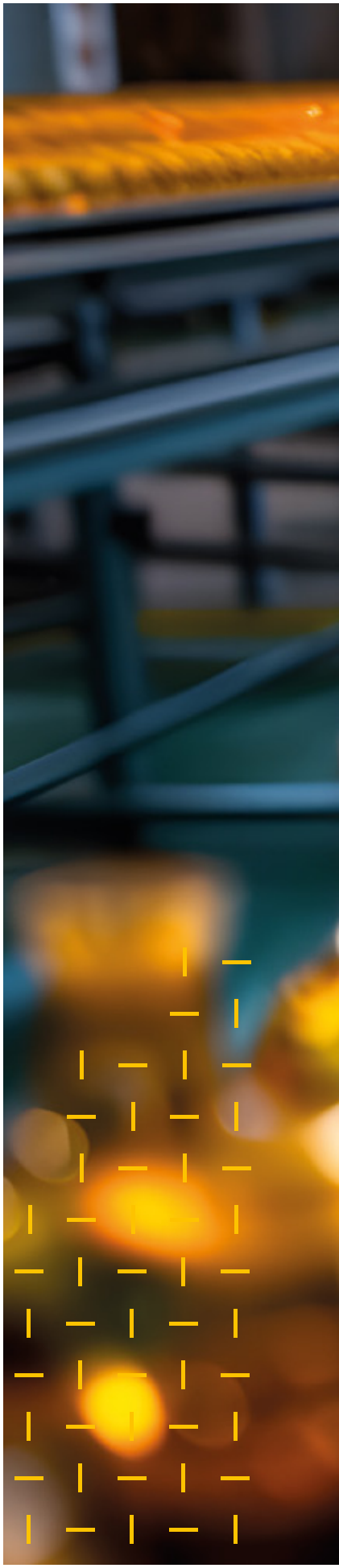



Power Quality and Energy Management

Electrical supply systems are becoming larger over time. Frequently, failures and disturbances are caused by overloaded networks. Using a monitoring system equipped with universal measuring devices from the PEM series, potential impacts on protective measures, risks arising from overloads or changes in energy consumption can be assessed even before the next phase of expansion.

The aim of a monitoring system must always be to detect even small changes in the relevant measured quantities, such as leakage current or harmonic content, and issue a prewarning in the event of deviations as early as possible. Trends of relevant measured quantities for voltage quality or leakage currents cannot be effectively monitored with one single measuring point in an electrical installation. Several measuring points are required which must be adjusted to the system structure.

Structure of the monitoring system

A granular structure of the monitoring system allows:

- Cost centre specific energy data acquisition
- Faster localisation in the event of a fault
- Economic pyramid structure

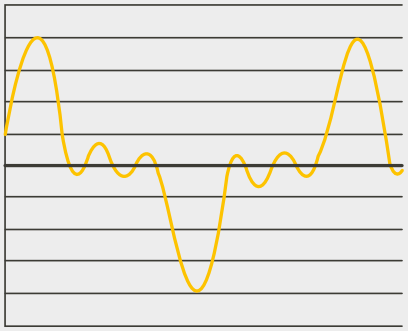

Distorted shape of current

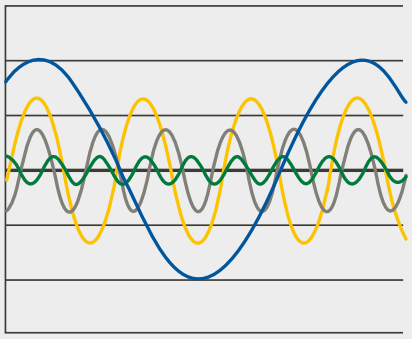

Analysis of the harmonics

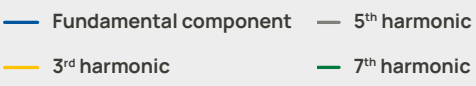

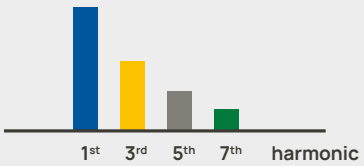

Spectrum of harmonics

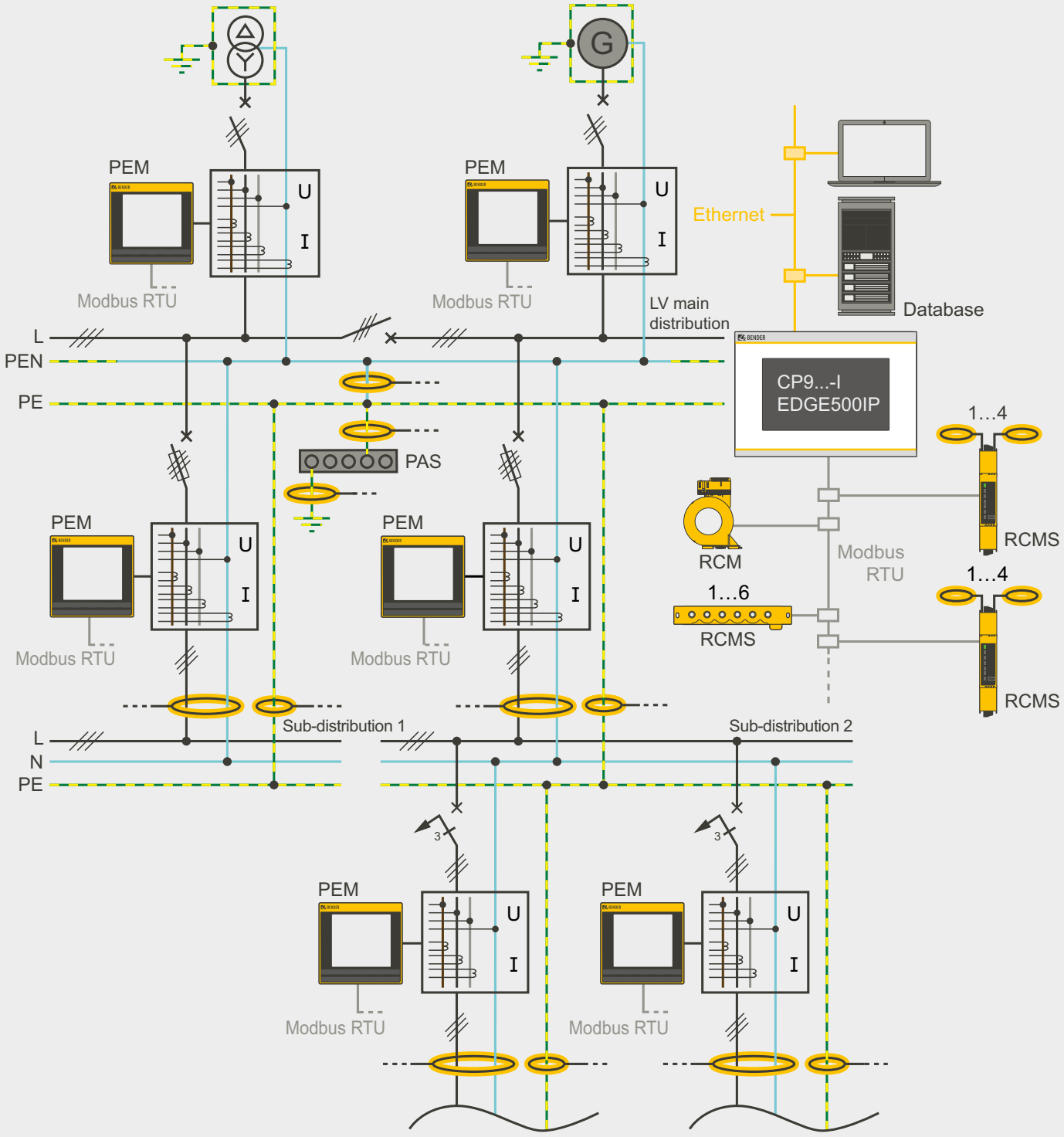

Example of how to set up a monitoring system

Universal measuring devices for power quality and energy management

The PEM353 digital universal measuring device measures all key parameters of an electricity supply network, such as voltage, current, power, energy and power quality, and is suitable for monitoring single-phase or multi-phase networks. The devices also feature limit value monitoring and connection fault detection,as well as an event log and an operating hours counter.
The measured values are displayed on a large screen and are also made available via a communication interface for transmission to a higher-level control system.



Universal measuring device PEM353

			PEM353	PEM353-P	PEM353-N
Normative requirements	Accuracy class of the active energy acc. to IEC 62053-22		0.5 S	0.5 S	0.5 S
	DIN EN 6100-4-7 (harmonic)		Class II	Class II	Class II
Measured quantities	Phase voltage/line-to-line voltage		✓	✓	✓
	Phase currents		✓	✓	✓
	Neutral current I_4		-	-	✓
	Neutral current I_4 (calculated)		✓	✓	✓
	Frequency/phase angle		✓	✓	✓
	Reactive and active energy consumption/ Reactive and active energy export		✓	✓	✓
	Voltage/current asymmetry		✓	✓	✓
	Power		per phase and total S in kVA, P in kW, Q in kvar	per phase and total S in kVA, P in kW, Q in kvar	per phase and total S in kVA, P in kW, Q in kvar
	Displacement factor cos (ϕ) / Power factor λ		✓	✓	✓
	Total harmonic distortion (THD_U/THD_I)		up to the 63st	up to the 63st	up to the 63st
	Harmonic components voltage		up to the 63st	up to the 63st	up to the 63st
	Harmonic components current		up to the 63st	up to the 63st	up to the 63st
	Transient detection		-	-	-
	Overvoltage (swell)		-	-	-
	Undervoltage (sag)		-	-	-
	Flicker severity P_{ST}		-	-	-
Features	Data recorder / HighSpeed data recorder		-	-	5/0
	Waveform recorder		-	-	-
	Digital inputs		4	4	4
	Digital outputs		-	2x pulse and/or solid-state	-
	Relay outputs (RO)		2	-	2
Technical aspects	Supply voltage		AC 95...250 V (47...440 Hz); DC 24...250 V	AC 95...250 V (47...440 Hz); DC 24...250 V	AC 95...250 V (47...440 Hz); DC 24...250 V
	Sampling rate (@ 50 Hz)		6.4 kHz	6.4 kHz	6.4 kHz
	Temperature		-25…+55 °C	-25…+55 °C	-25…+55 °C
	Communication		Modbus RTU, BACnet MS/ TP, DNP	Modbus RTU, BACnet MS/ TP, DNP	Modbus RTU, BACnet MS/ TP, DNP

Ordering information

Type	Nominal system voltage	Power input *I1*, *I2*, *I3*	Power input *I4*	Digital outputs	Art. No.
PEM353	3(N) AC 230/400 V	5A / 1A	-	2 relay outputs	B93100355
PEM353-P	3(N) AC 230/400 V	5A / 1A	-	2 solid-state pulse outputs	B93100354
PEM353-N	3(N) AC 230/400 V	5A / 1A	5A	2 relay outputs	B93100353

Measuring current transformers

All measuring devices in the PEM series can be operated with standard current transformers (1A or 5A). Care must be taken to ensure that, in order to comply with an accuracy class (e.g. 0,5 S), the measuring device is of a higher class and the current transformers used are of class 0,5 S or better. (See DIN EN 61557-12, Annex E.2).



CTB41



KBR32

Available current transformers for PEM353 universal measuring devices

	Type	Design	Primary current	Secondary current	Accuracy	Art. No.
	WL605 KL. 1	CTB31	60	5	1	B98086001
	WL601 KL. 1	CTB31	60	1	1	B98086002
	WL755 KL. 1	CTB31	75	5	1	B98086003
	WL751 KL. 1	CTB31	75	1	1	B98086004
	WL1255 KL. 0,5	CTB31	125	5	0,5	B98086005
	WL1255 KL. 1	CTB31	125	5	1	B98086007
	WL1251 KL. 0,5	CTB31	125	1	0,5	B98086006
	WL1251 KL. 1	CTB31	125	1	1	B98086008
	WL1505 KL. 0,5	CTB31	150	5	0,5	B98086009
	WL1505 KL. 1	CTB31	150	5	1	B98086011
	WL1501 KL. 0,5	CTB31	150	1	0,5	B98086010
	WL1501 KL. 1	CTB31	150	1	1	B98086012
	WL2005 KL. 0,5	CTB31	200	5	0,5	B98086013
	WL2005 KL. 1	CTB31	200	5	1	B98086015
	WL2001 KL. 0,5	CTB31	200	1	0,5	B98086014
	WL2001 KL. 1	CTB31	200	1	1	B98086016
	WL2505 KL. 0,5	CTB41	250	5	0,5	B98086017
	WL2505 KL. 1	CTB41	250	5	1	B98086019
	WL2501 KL. 0,5	CTB41	250	1	0,5	B98086018
	WL2501 KL. 1	CTB41	250	1	1	B98086020
	WL3005 KL. 0,5	CTB41	300	5	0,5	B98086021
	WL3005 KL. 1	CTB41	300	5	1	B98086023
	WL3001 KL. 0,5	CTB41	300	1	0,5	B98086022
	WL3001 KL. 1	CTB41	300	1	1	B98086024
	WL4005 KL. 1	CTB41	400	5	1	B98086026
	WL4005 KL. 0,5	CTB41	400	5	0,5	B98086027
	WL4001 KL. 1	CTB41	400	1	1	B98086028
	WL4001 KL. 0,5	CTB41	400	1	0,5	B98086025
	WL5005 KL. 1	CTB41	500	5	1	B98086029
	WL5005 KL. 0,5	CTB41	500	5	0,5	B98086031
	WL5001 KL. 1	CTB41	500	1	1	B98086032
	WL5001 KL. 0,5	CTB41	500	1	0,5	B98086033
	WL6005 KL. 1	CTB51	600	5	1	B98086034
	WL6005 KL. 0,5	CTB51	600	5	0,5	B98086035
	WL6001 KL. 1	CTB51	600	1	1	B98086036
	WL6001 KL. 0,5	CTB51	600	1	0,5	B98086037
	WL8005 KL. 1	CTB51	800	5	1	B98086038
	WL8005 KL. 0,5	CTB51	800	5	0,5	B98086039
	WL8001 KL. 1	CTB51	800	1	1	B98086040
	WL8001 KL. 0,5	CTB51	800	1	0,5	B98086041
	WL10005 KL. 1	CTB51	1000	5	1	B98086042
	WL10005 KL. 0,5	CTB51	1000	5	0,5	B98086043
	WL10001 KL. 1	CTB51	1000	1	1	B98086044
	WL10001 KL. 0,5	CTB51	1000	1	0,5	B98086045
	WLS501 KL. 3FS5	KBR18	50	1	3FS5	B98086046
	WLS1001 KL. 3FS5	KBR18	100	1	3FS5	B98086047
	WLS1501 KL. 3FS5	KBR18	150	1	3FS5	B98086048
	WLS2501 KL. 3FS5	KBR32	250	1	3FS5	B98086049
	WLS5001 KL. 1FS5	KBR32	500	1	3FS5	B98086050

Measuring and monitoring relays

Voltage monitoring, phase monitoring

Multifunctional voltage and frequency monitoring relays are available for monitoring various parameters in main and auxiliary circuits. They provide the necessary information advantage to identify faults and malfunctions at an early stage and respond to them before they lead to time-consuming and costly operational downtime and damage to equipment.

Device overview voltage monitoring

Products	 VME420	 VME421H	 VMD420	 VMD421H	 VMD460-NA	 VMD461	 VMD258
	Page 14	Page 14	Page 16	Page 16	Page 18	Page 20	Page 21
DC	U<, U>	U<, U>	-	-	-	-	-
AC	U<, U>	U<, U>	-	-	U<, U< <, U>, U> >, U_{10min} >	U<, U< <, U< < <, U>, U> >, U> > >	-
3 AC	-	-	U<, U>	U<, U>	U<, U< <, U>, U> >, U_{10min} >	U<, U< <, U< < <, U>, U> >, U> > >	U<, U>
3/N AC	-	-	U<, U>	U<, U>	U<, U< <, U>, U> >, U_{10min} >	U<, U< <, U< < <, U>, U> >, U> > >	-
Frequency	f<, f>	f<, f>	f<, f>	f<, f>	f<, f< <, f>, f> >	f<, f< <, f>, f> >	-
Phase sequence	-	-	✓	✓	✓	✓	-
Phase failure	-	-	✓	✓	✓	✓	-
Asymmetry	-	-	✓	✓	✓	✓	-
Supply voltage U_s	external	system	external	system	external	external	system

Application examples voltage monitoring, phase monitoring

Measured quantity	Common causes of faults	Possible effects
Undervoltage U<	Voltage fluctuations Blown fuses Wire breakage	Failure or destruction of motors due to overheating Accidental reset of a device Undefined circuit and system states Accidental restart
Overvoltage U>	Voltage fluctuations	Damage to system components caused by overvoltage Accidental switching on of an installation
Phase sequence	Swapping wires Faulty extension cables	Incorrect rotation direction of a motor Destruction of roller drives Hazardous situations to man and machine when using mobile devices and systems
Phase failure	Blown fuse(s)/control voltage failure Wire breakage	Overheating of motors due to single-phase operation
Phase unbalance	Unbalanced distribution of the load Phase failure with energy recovery	Overheating of motors due to unbalanced voltages Failure of system parts

Current monitoring

Current relays are mainly used to monitor the load on motors and the function of electrical loads. They provide the necessary information advantage to identify faults and malfunctions at an early stage and respond to them before they lead to time-consuming and costly operational downtime and damage to equipment.

Device overview current monitoring

Products	 CME420	 CMD420/421	 CMS460
	Page 22	Page 23	Page 24
1 AC with U_s	I<, I>	-	I<, I>
3 AC with U_s	-	I<, I>	I<, I>
Measuring channels	1	3	12

Application examples

Measured quantity	Application
Current monitoring	Power consumption of motors, e.g. in crane systems, pumps, lifts
	Monitoring of lighting systems, heating circuits, charging stations
	Overload control of hoisting gear and means of transportation
	Monitoring of locking devices, driving to end stops
	Monitoring of emergency lighting
	Monitoring of position lighting on high-rise buildings
	Monitoring of screw conveyors, e.g. in sewage treatment plants, in case of blocking of conveyor systems
	Dust removal in wood working
	Monitoring of small currents, e.g. small motors, indicator lamps

Loop monitoring

By continuously monitoring protective conductor connections, loop resistances and residual currents, potential faults and malfunctions can be identified at an early stage. This enables targeted measures to be taken before costly operational disruptions or damage to equipment occurs. Customisable alarm delays and clear status indicators ensure transparency and safety during operation.

Device overview loop monitoring

Products	 GM420	 RC48C
	Page 26	Page 26
Longitudinal resistance detection	✓[1]	✓
Cross-resistance detection	-	✓[2]
Residual current monitoring	-	✓
Display of external AC voltage	✓	-

[1] including resistance display
[2] End link required

Application examples

Measured quantity	Application
GM420	Measurement and display of loop resistance and external voltage
Loop resistance	Monitoring of the protective conductor connection in stationary AC systems
AC external voltage	Detection of unwanted voltages on the protective conductor
RC48C	Monitoring of loop resistance with a fixed response threshold
Longitudinal resistance (pilot wire test)	Monitoring of trailing cables for breaks or high-resistance connections
Cross-resistance (short-circuit test)	Detection of short circuits between the protective conductor and the pilot wire
Residual current (fault current)	Early detection of insulation faults or earth faults in mobile or stationary installations

Voltage and frequency monitoring relays for AC and DC systems

Products		 LINETRAXX® VME420	 LINETRAXX® VME421H
Mains voltage	AC	✓	✓
	DC	✓	✓
Functions	Undervoltage/overvoltage U<, U>	✓	✓
	Underfrequency/overfrequency f<, f>	✓	✓
	Preset function	✓	✓
	Password protection	✓	✓
	History memory (first alarm value)	✓	✓
	Supply voltage U_S	DC 9.6…94 V/AC 16…72 V, AC/DC 70…300 V	U_n
	Integrated energy storage device	—	✓
Response values	Undervoltage/overvoltage U<, U>	AC/DC 6…300 V	AC/DC 70…300 V
	Hysteresis U	1…40 %	1…40 %
	Underfrequency/overfrequency f<, f>	10…500 Hz	70…500 Hz
	Hysteresis f	0.1…2 Hz	0.1…2 Hz
	Rated frequency	DC, 15…460 Hz	DC, 15…460 Hz
	Operating time, voltage	DC/AC 16.7 Hz: ≤ 130 ms, AC 42…460 Hz: ≤ 70 ms	DC/AC 16.7 Hz: ≤ 130 ms, AC 42…460 Hz: ≤ 70 ms
	Operating time, frequency	AC 15…460 Hz: ≤ 310 ms	AC 15…460 Hz: ≤ 310 ms
	Response delay t_{on}	0…300 s	0…300 s
	Delay on release t_{off}	0…300 s	0…300 s
	Start-up delay t	0…300 s	0…300 s
Indicator LEDs	Power On LED	✓	✓
	Alarm LEDs	✓	✓
Switching elements	Number	2 x 1 changeover contacts, programmable	2 x 1 changeover contacts, programmable
	Operating principle	N/O or N/C operation, programmable	N/O or N/C operation, programmable
	Enclosure dimensions in mm (H x W x D)	90 x 36 x 70.5	90 x 36 x 105.5
	Accessories	Mounting clip	Mounting clip
	Interface option	M	M
	Standards, approvals and certifications	UL, Lloyd's Register	UL, Lloyd's Register

The VME420/421H voltage and frequency monitoring relays monitor whether the voltage or frequency exceeds or fails below one or more preset thresholds. The devices are suitable for AC and DC systems.

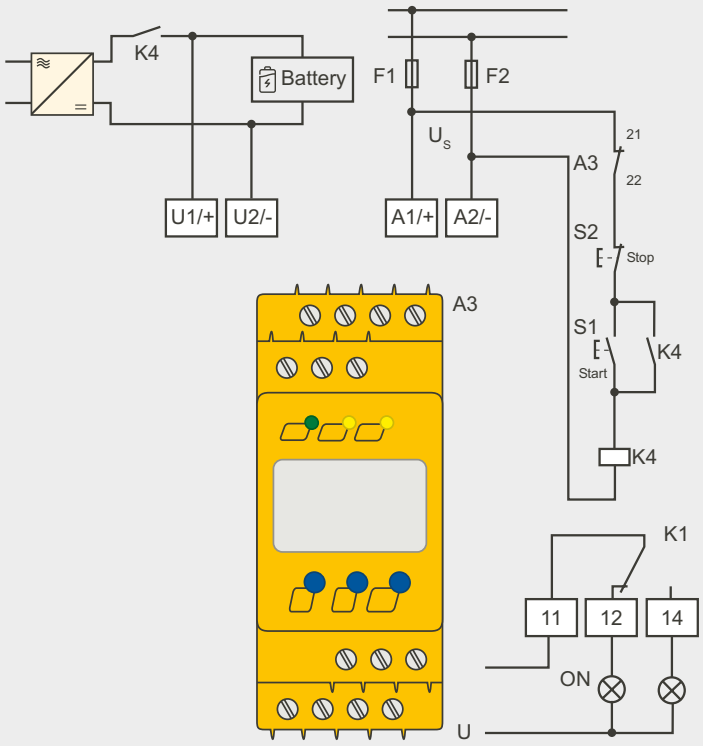

Ordering information

Type	Nominal system voltage[1] U_n	Supply voltage[1] U_S	Art. No.	
			Screw-type terminal	Push-wire terminal
VME420-D-1	AC 16…72 V/DC 9.6…94 V	AC 16…72 V, 15…460 Hz/DC 9.6…94 V	B93010001	B73010001
VME420-D-2	AC/DC 70…300 V	AC 70…300 V, 15…460 Hz/DC 70…300 V	B93010002	B73010002
VME421H-D-1	AC 9.6…150 V, 15…460 Hz/DC 9.6…150 V	U_n	B93010003	B73010003
VME421H-D-2	AC 70…300 V, 15…460 Hz/DC 70…300 V	U_n	B93010004	B73010004

[1] Absolute values

Accessories

Description	Art. No.
Mounting clip for screw mounting (1 piece per device)	B98060008

Voltage and frequency monitoring relays for 3-phase AC systems

Products		 LINETRAXX® VMD420	 LINETRAXX® VMD421H
Mains voltage	3 AC	✓	✓
	3/N AC	✓	✓
Functions	Undervoltage/overvoltage U<, U>	✓	✓
	Underfrequency/overfrequency f<, f>	✓	✓
	Phase sequence	✓	✓
	Phase failure	✓	✓
	Asymmetry	✓	✓
	Preset function	✓	✓
	Password protection	✓	✓
	History memory (first alarm value)	✓	✓
	Supply voltage U_S	DC 9.6…94 V/AC 16…72 V, AC/DC 70…300 V	U_n
	Integrated energy storage device	—	min. 2.5 s
Response values	Undervoltage/overvoltage U<, U>	AC 6…500 V/6…288 V	AC 70…500 V/70…288 V
	Hysteresis U	1…40 %	1…40 %
	Underfrequency/overfrequency f<, f>	10…500 Hz	10…500 Hz
	Hysteresis f	0.1…2 Hz	0.1…2 Hz
	Asymmetry	5…30 %	5…30 %
	Rated frequency	15…460 Hz	15…460 Hz
	Operating time, voltage/frequency	≤ 140 ms/335 ms	≤ 140 ms/335 ms
	Response delay t_{on}	0…300 s	0…300 s
	Delay on release t_{off}	0…300 s	0…300 s
	Start-up delay t	0…300 s	0…300 s
Indicator LEDs	Power On LED	✓	✓
	Alarm LEDs	✓	✓
Switches/ buttons	Undervoltage/Overvoltage	-	-
	AC/DC switch	-	-
	Buttons	TEST/RESET/MENU	TEST/RESET/MENU
Switching elements	Number	2 x 1 changeover contacts, programmable	2 x 1 changeover contacts, programmable
	Operating principle	N/O or N/C operation, programmable	N/O or N/C operation, programmable
	Enclosure dimensions in mm (H x W x D)	90 x 36 x 70.5	90 x 36 x 105.5
	Accessories	Mounting clip	Mounting clip
	Interface option	M	M
	Standards, approvals and certifications	UL, Lloyd's Register	UL, Lloyd's Register

The VMD420/421H series voltage and frequency monitoring relays monitor whether the voltage or frequency exceeds or falls below one or more preset thresholds. The devices can be used for three-phase systems with or without an N conductor. Furthermore, the devices feature additional monitoring functions such as phase sequence, phase failure, frequency and asymmetry monitoring.

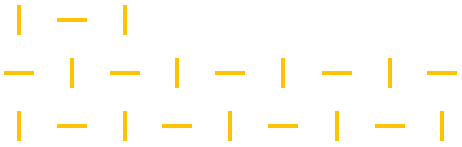

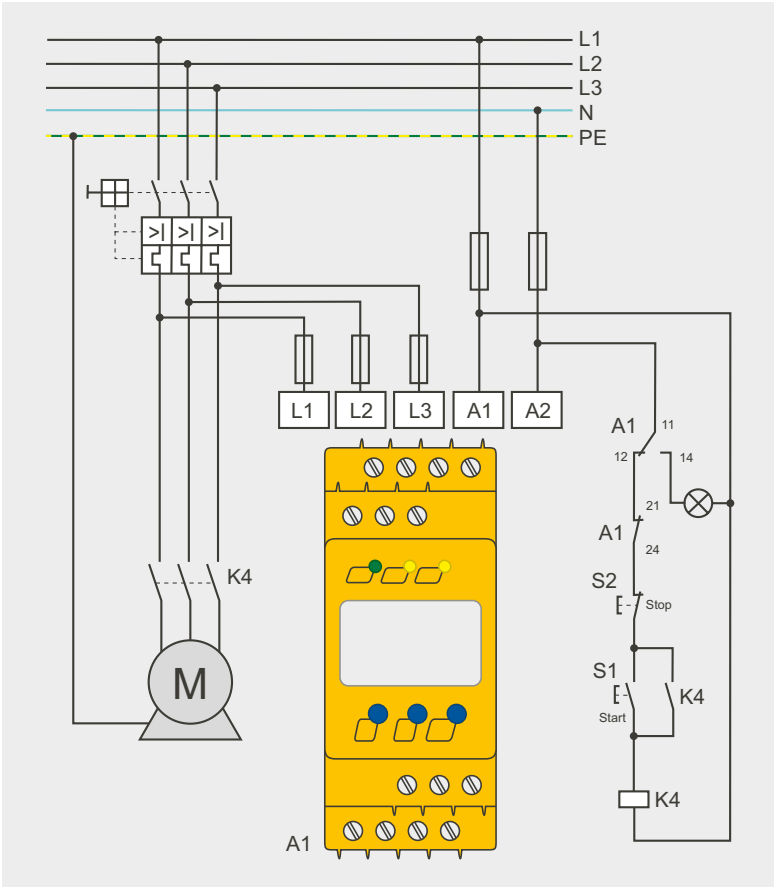

Ordering information

Type	Nominal system voltage[1] U_n	Supply voltage[1] U_s	Art. No.	
			Screw-type terminal	Push-wire terminal
VMD420-D-1	3 AC and 3/N AC 0–500/288 V	AC 16...72 V, 15...460 Hz/DC 9,6...94 V	B93010005	B73010005
VMD420-D-2		AC/DC 70...300 V, 15...460 Hz	B93010006	B73010006
VMD421H-D-3	3 AC and 3/N AC 70–500 V, 15–460 Hz	U_n	B93010007	B73010007

[1] Absolute values

Accessories

Description	Art. No.
Mounting clip for screw mounting (1 piece per device)	B98060008

Voltage and frequency monitoring relays for system decoupling of distributed generation systems

Product		 LINETRAXX® VMD460-NA
Mains voltage	3 AC	✓
	3/N AC	✓
Functions	Undervoltage/overvoltage U<, U>, U>10min	✓
	Undervoltage/overvoltage U<<, U>>	✓
	Underfrequency/overfrequency f<, f>	✓
	Underfrequency/overfrequency f<<, f>>	✓
	Phase sequence	✓
	Phase failure	✓
	Asymmetry	✓
	ROCOF df/dt	✓
	Vector shift	✓
	Password protection	✓
	History memory	✓
	Supply voltage U_S	AC/DC 100…240 V
	Integrated energy storage device	-
	Rated frequency	45…65 Hz
Indication	Power On LED	✓
	Alarm LED undervoltage	✓
	Alarm LED overvoltage	✓
Switching elements	Number	2 x 1 changeover contacts
	Operating principle	N/C operation, programmable
	Enclosure dimensions in mm (H x W x D)	90 x 108 x 74
	Accessories	Mounting rail
	Standards, approvals and certifications	VDE-AR-N 4105:2018-11, VDE-AR-N 4110:2018-11, G99/1:2019, G98/1:2019, G83/2

The VMD460-NA is an external grid and system protection device that disconnects the connection between the public grid and the generation plant by activating coupling switches in the event of limit violations.
If the measured voltage and frequency values fall outside the thresholds specified in the standards, the relays of the VMD460-NA will trip.
The VMD460-NA is multifunctional and adjustable. The current readings are displayed continuously on the LCD screen. The measured values used to switch the relays are stored.

Application examples VMD460-NA

- Central NS protection (VDE-AR-N 4105)
- Protective disconnection (VDE-AR-N 4110)
- Interface Protection (IP) (Engineering Recommendations; EREC G99, G83)

Ordering information

Type	Response value	Supply voltage[1] U_s	Art. No.
			Screw-type terminal
VMD460-NA-D-2	AC 400/230 V	AC/DC 100…240 V	B93010045

[1] Absolute values

Accessories

Description	Art. No.
Mounting clip for screw mounting (1 piece per device)	B98060008

Multifunctional voltage relay for AC, DC and three-phase AC systems

Product		LINETRAXX® VMD461
Mains voltage	AC	✓
	3 AC	✓
	3/N AC	✓
	DC	✓
Function	Undervoltage/overvoltage U<, U<<, U<<<, U>, U>>, U>>>	✓
	Underfrequency/overfrequency f<, f<<, f<<<, f>, f>>, f>>>	✓
	Phase sequence	✓
	Phase failure	✓
	Asymmetry	✓
	ROCOF df/dt	✓
	Vector shift	✓
	Password protection	✓
	History memory	✓
	Supply voltage U_S	AC/DC 100…240 V
Indication	Power On LED	✓
	Alarm LED undervoltage	✓
	Alarm LED overvoltage	✓
Switching elements	Number	2 x 1 changeover contacts
	Operating principle	N/C or N/O operation
	Enclosure dimensions in mm (H x W x D)	90 x 108 x 74
	Accessories	CD440
	Standards, approvals and certifications	UL 508

The VMD461 multifunctional voltage monitoring relay monitors frequencies, under- and overvoltages in DC, AC and three-phase AC systems. The phase voltages and/or line-to-line voltages are measured as an RMS value and are continuously shown on the device display. The measured value required to trigger the alarm relay is stored.

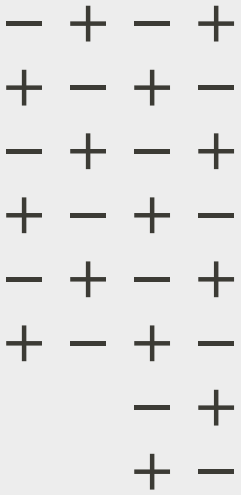

Ordering information

Type	Supply voltage U_S	Art. No.
VMD461-D-2	AC/DC 100…240 V	B93010047

Product	CD440
Monitored voltage range	DC / 3 AC 1200; AC / 3-phase AC 690 V
Enclosure dimensions in mm (H x W x D)	93 x 71.7 x 62.5

The CD440 coupling unit is an accessory designed to extend the monitorable voltage range to DC / 3-phase AC 1200 V or AC / 3-phase AC 690 V.

Accessories

Description	Art. No.
Mounting clip for screw mounting (1 piece per device)	B98060008
Coupling device CD440	B73010046

Voltage relays for 3-phase AC systems

Product		LINETRAXX® VMD258
	3 AC	✓
Function	Undervoltage/overvoltage U<,U>	✓
	Supply voltage U_S	U_n
	Energy storage	External energy storage device ES258
Measuring circuit	Measuring range/nominal system voltage U_n	3 AC 690/500/480/440/400/230/110/100 V
Measuring circuit	Rated frequency	45…66 Hz
Measuring circuit	Response values	adjustable U›, U‹
Measuring circuit	Hysteresis	< 3 %
Measuring circuit	Operating time Undervoltage/Overvoltage	100 ms/60 ms
Measuring circuit	Response delay	0…5 s ± 10 %
Measuring circuit	Delay on release	100 ms ± 20 %
Indicator LEDs	Power On LED	✓
Indicator LEDs	Alarm LED undervoltage	✓
Indicator LEDs	Alarm LED overvoltage	✓
Potentiometer	Undervoltage	✓
Potentiometer	Overvoltage	✓
Potentiometer	Response value	✓
Switching elements	Number	2 x 2 changeover contacts
Switching elements	Operating principle	N/C operation (undervoltage) N/O operation (overvoltage)
	Enclosure dimensions in mm (H x W x D)	93 x 107.5 x 110.1
	Accessories	ES258

Energy storage product	ES258
Supply voltage U_S	DC 41…47 V
Enclosure dimensions in mm (H x W x D)	85 x 52.5 x 70

Voltage relays monitor whether the voltage in 3-phase AC systems up to 690 V exceeds or falls below set thresholds. The VMD258 is designed as a fully analogue voltage relay without microcontroller technology.

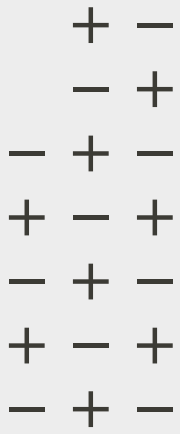

Ordering information

Type	Connection	Art. No.
VMD258 3 AC 100 V	3 AC 100 V	B93010060
VMD258 3 AC 110 V	3 AC 110 V	B93010061
VMD258 3 AC 230 V	3 AC 230 V	B93010062
VMD258 3 AC 400 V	3 AC 400 V	B93010063
VMD258 3 AC 440 V	3 AC 440 V	B93010064
VMD258 3 AC 480 V	3 AC 400 V	B93010065
VMD258 3 AC 500 V	3 AC 500 V	B93010066
VMD258 3 AC 690 V	3 AC 690 V	B93010067

The ES258 energy storage unit is an accessory for the VMD258 under/over-voltage relay. In the event of a power failure, it supplies the necessary power to the electronics of the connected VMD258 for the duration of the maximum response time.

Accessories

Description	Art. No.
External storage device ES258	B93010068
Additional mounting clips (screw mounting)	B98060008

Current relays for single-phase AC systems

Product		LINETRAXX® CME420
	Mains voltage AC	✓
Function	Undercurrent/overcurrent I<, I>	✓
	Window discriminator function	✓
	Password protection	✓
	History memory (first alarm value)	✓
	Supply voltage U_S	DC 9,6…94 V/AC 16…72 V, AC/DC 70…300 V
Response values	Current	AC 0.05…16 A true RMS
	Rated frequency	42…2000 Hz
	Setting range	0.1…16 A x transformation ratio n
	Transformation ratio n	1…2000
	Hysteresis	10…40 %
	Operating time	≤ 70 ms
	Response delay	0…300 s
	Delay on release	0…300 s
Indicator LEDs	Operation	✓
	Alarm undercurrent	✓
	Alarm overcurrent	✓
Switching elements	Number	2 x 1 changeover contacts, programmable
	Operating principle	N/O or N/C operation, programmable
	Enclosure dimensions in mm (H x W x D)	90 x 36 x 70.5
	Accessories	Mounting clip
	Interface option	M
	Standards, approvals and certifications	UL508

The CME420 current relay monitors whether one or more preset thresholds are exceeded or not reached.

Ordering information

Type	Setting range	Supply voltage[1] U_S	Art. No.	
			Screw-type terminal	Push-wire terminal
CME420-D-1	AC 0.1…16 A	AC 16…72 V, 42…460 Hz/DC 9.6…94 V	B93060001	B73060001
CME420-D-2	AC 0.1…16 A	AC 70…300 V, 42…460 Hz/DC 70…300 V	B93060002	B73060002

[1] Absolute values

Accessories

Description	Art. No.
Mounting clip for XM420 enclosure	B98060008

Current relays for three-phase AC systems

Product		LINETRAXX® CMD420/421
	Mains voltage 3 AC	✓
Function	Undercurrent/overcurrent I<, I>	✓
Function	Window discriminator function	✓
	Supply voltage U_S	DC 9.6…94 V/AC 16…72 V, AC/DC 70…300 V
Response values	Current	AC 0.05…16 A true RMS
Response values	Current transformer connection	1A SA
Response values	Setting range	0.1…16 A x transformation ratio n
Response values	Rated frequency	42…2000 Hz
Response values	Hysteresis	1…40 %
Response values	Operating time	≤ 130 ms
Response values	Response delay	0…300 s
Response values	Delay on release	0…300 s
Indicator LEDs	Operation	✓
Indicator LEDs	Alarm undercurrent	✓
Indicator LEDs	Alarm overcurrent	✓
Indicator LEDs	Alarm window discriminator function	✓
Switching elements	Number	2 x 1 changeover contacts, programmable
Switching elements	Operating principle	N/O or N/C operation
	Enclosure dimensions in mm (H x W x D)	90 x 36 x 70.5
	Accessories	Mounting clip

The CMD420/421 current relays monitor whether the current in 3-phase AC systems exceeds or falls below a set threshold.

Ordering information

Type	Supply voltage[1] U_S	Current transformer connection	Art. No.	
			Screw-type terminal	Push-wire terminal
CMD420-D-1	AC 16…72 V/DC 9.6 V…94 V, 15…460 Hz	1A	B93060006	B73060006
CMD420-D-2	AC/DC 70…300 V, 15…460 Hz	1A	B93060007	B73060007
CMD421-D-1	AC 16…72 V/DC 9.6 V…94 V, 15…460 Hz	SA	B93060008	B73060008
CMD421-D-2	AC/DC 70…300 V, 15…460 Hz	SA	B93060009	B73060009

[1] Absolute values

Accessories

Description	Art. No.
Mounting clip for XM420 enclosure	B98060008

Current relays for AC systems

Product		LINETRAXX® CMS460
	Mains voltage AC	✓
	AC current/pulsed current	✓
Function	Undercurrent/overcurrent I<, I>	✓
	Supply voltage U_S	DC 16…94 V/AC 16…72 V, 42…460 Hz AC/DC 70…276 V, 42…460 Hz
Measuring circuit	Measuring channels per device	12
	Rated frequency	42…2000 Hz
	Hysteresis approx.	2…40 %
	Operating time	≤ 180 ms
	Response delay	0…999 s
	Delay on release	0…999 s
Indicator LEDs	LC display	✓
	Operation	✓
	Alarm undercurrent	✓
	Alarm overcurrent	✓
Switching elements	Number	2 x 1 changeover contacts
	Operating principle	N/O or N/C operation
	Enclosure dimensions in mm (H x W x D)	90 x 108 x 74
	Accessories	-

AC current relays are designed to monitor the upper and lower limits of set response values on 12 channels.

Ordering information

Supply voltage[1] U_S	Type	Art. No.
AC 16…72 V, 42…460 Hz/DC 16…94 V	CMS460-D-1	B94053017
AC/DC 70…276 V, 42…460 Hz	CMS460-D-2	B94053018

[1] Absolute values



Monitoring relay for loop monitoring

Loop monitoring devices detect faults in protective conductor connections. RC48C for moving trailing cables with short-circuit and open-circuit detection. GM420 for stationary AC systems with precise resistance and external voltage measurement.

Products		 LINETRAXX® GM420	 LINETRAXX® RC48C
	Supply voltage U_S	AC 16…72 V/DC 9,6…94 V, AC/DC 70…300 V	AC/DC 60…264 V, 50…60 Hz, AC/DC 110…240 V, 50…60 Hz[1]
Measuring circuit	Loop resistance R›	✓	✓
	Rated frequency	42…460 Hz	50…60 Hz
	Hysteresis approx.	1…40 %	-
	Response time	when the loop is interrupted (R › 50 kΩ) ≤ 40 ms when the loop is closed (›R) ≤ 500 ms when external voltage (›U) ≤ 100 ms	for longitudinal and transverse errors: 0.2 s ±20%
	Response delay	0…99 s	adjustable 0.1–2 s
	Loop resistance R›	0.1…100 Ω	RC48C-935 40 Ω RC48C-9935, RC48C-9936 400 Ω
	Extraneous voltage U_f	AC 0…50 V	-
Indicator LEDs	Operation	✓	✓
	Alarm	✓	✓
	Loop resistance R›	✓	✓
	Residual current $I_{\Delta n}$	-	✓
	Switches/buttons	TEST/RESET/MENU	TEST/RESET/ DIP-switch and $I_{\Delta n}$/A factor
Switching elements	Number	2 x 1 changeover contacts	2 changeover contacts
	Operating principle	N/O or N/C operation	N/O or N/C operation
	Enclosure dimensions in mm (H x W x D)	90 x 36 x 70.5	77 x 161 x 70
	Accessories	Mounting clip	-

[1] For UL applications

Ordering information

Type	Supply voltage[1] U_S	Art. No.	
		Screw-type terminal	Push-wire terminal
GM420-D-1	AC 16…72 V, 15…460 Hz/DC 9.6…94 V	B93082001	B73082001
GM420-D-2	AC 70…300 V, 15…460 Hz/DC 70…300 V	B93082002	B73082002
RC48C-935	AC/DC 60…264 V, 50…60 Hz, AC/DC 110…240 V, 50/60 Hz	B94013002	-
RC48C-9935	AC/DC 60…264 V, 50…60 Hz, AC/DC 110…240 V, 50/60 Hz[2]	B94013012	-
RC48C-9936	AC/DC 60…264 V, 50…60 Hz, AC/DC 110…240 V, 50/60 Hz	B94013013	-

[1] Absolute values

[2] Voltage AC/DC 110–240 V for UL applications

Accessories

Type	Description	Art. No.
Mounting clip	for XM420 enclosure	B98060008
E6	End cap for RC48C, P = 5 W (without enclosure)	B94013008
E6-50	End cap for RC48C, P = 50 W (without enclosure)	B94013009
E6S	End cap for RC48C, P = 50 W	B94013006
E6S-T	End cap for RC48C-935 with integrated resistor for remote shutdown, P = 50 W	B94013007
RI2000GC	Alarm indicator and test combination for RC48C	B94071000
CTAC60	Measuring current transformer, inner diameter 60 mm	B98110017
CTAC120	Measuring current transformer, inner diameter 120 mm	B98110019
W2-S70	Measuring current transformer, inner diameter 70 mm	B911732
W2-S105	Measuring current transformer, inner diameter 105 mm	B911733

Keep track at all times with Condition Monitoring

Real-time operational data
In modern monitoring systems, thousands of measurement values are generated every second. This vast amount of data must be organised and presented in a clear and understandable way so that we can keep track of the installation at all times. Bender's Condition Monitors take care of this task: They collect and visualise all relevant operational data in real time.

Integrated alarm management
Thanks to the integrated alarm management system, sources of error can be identified at an early stage and addressed in a targeted manner. Customisable instructions help ensure a rapid response, whilst alerts can also be sent by email, depending on the escalation level. This ensures that critical situations are not only identified, but also communicated and resolved.

Customised visualisation
Thanks to flexible visualisation options, the information can be displayed at both the installation-specific level and at the interface or subsystem level. In addition, measurement values can be saved for later analysis. The devices also offer the option of being connected to higher-level systems – for example, to forward collective alarms or individual measurement values.

This is what the Bender Condition Monitors offer

- Industrial visualisations
- Integration of third-party devices
- Links – Control of actuators
- Alarm management
- Email notifications

The benefits of Condition Monitoring



Full transparency

Continuous data logging provides a real-time overview of the condition of the electrical system.



Higher system availability

Using condition data to identify the need for action at an early stage and avoid unplanned downtime.



Effective maintenance planning

Status and warning messages provide an ideal basis for predictive maintenance.



Quick commissioning of Bender components

No complicated integration of measuring devices is required.

Bender's Condition Monitors are available in two versions: as a compact DIN rail solution or as a display version. Both models feature a built-in web server as well as all standard interfaces and protocols for seamless integration into automation, building management and IT systems.



EDGE500IP



CP907-I

Parameterisation	**Web server**	✓	
	System-wide device configuration	✓	
	Visualisations	✓	
	Personalised alerts	✓	
	Email notifications	✓	
	Integration of third-party devices	✓	
	Complex links	✓	
	System documentation	✓	
	Device/system backup	✓	
	Virtual devices	100 x 16 channels each	
	History memory	20,000 records	
	Data logger	30 per 10,000 records	
Interfaces	**Modbus RTU**	✓	
	BMS	✓	
	USB	2 USB-C	2 USB-A
	Ethernet	2	1
	Input protocol	BMS (internal) / BCOM / Modbus RTU/TCP	
	Output protocol	Modbus RTU/TCP / SNMP / MQTT	Ethernet / Modbus RTU/ TCP / SNMP / Profinet / MQTT
Inputs/outputs	**Digital inputs**	8	12
	Relay outputs	3	1
Installation		DIN rail	Control panel, surface-mounted, flush-mounted
Supply voltage		DC 24 V	
Device dimensions		107,5 x 93 x 62,9/48,5 mm	226 x 144 x 78 mm

Ordering information

	Display size	Supply voltage	Art. No.
EDGE500	–	DC 24 V	B950612501
CP907-I	7" (17.6 cm)	DC 24 V	B950610312

[1] Various software modules (function modules) are available for the EDGE500, which extend the device's functionality.
[2] Flush-mounted housing, tempered glass display, white

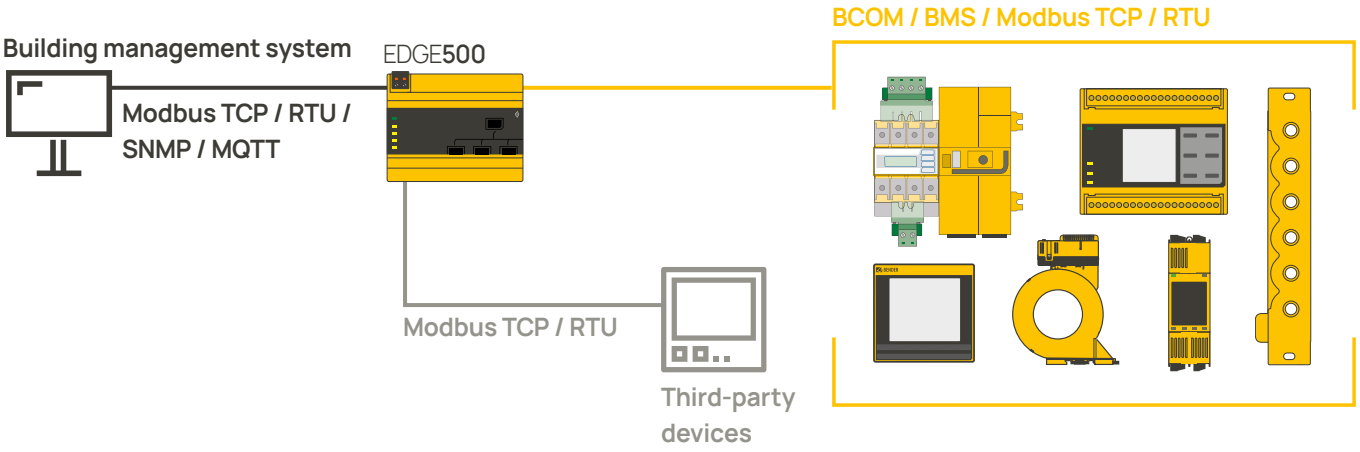

Support during all stages

From planning to modernisation – Our extensive know-how is at your disposal during all project phases.

Furthermore, with our first-class service we guarantee maximum safety for your electrical installations.
We offer services ranging from support over telephone to repairs and on-site service – with modern measuring devices and competent employees.

Secure yourself:

- High availability of your system through rapid response to error messages
- Increased return on your capital expenditure (CAPEX) through optimised maintenance processes
- Targeted reduction in operating costs (OPEX) through reduced downtime and shorter service calls
- Support with your proactive system monitoring and regular checks of your systems, power quality and monitoring equipment
- Automatic control, analysis, correction, new settings/updates
- Competent assistance with parameter changes and updates

Maximum availability through remote maintenance

Bender Remote Assist offers you support via remote access, high-quality service and advice for your challenging task consisting in ensuring consistent high safety in your systems.

This is because many service calls – including fault rectification, as well as analyses and inspections - can be carried out via remote maintenance, without the need for a time-consuming and costly on-site visit by a technician.

This fast, efficient help and advice by our expert network allows the highest possible availability of your system.





Competent service for maximum safety and high availability of your installation

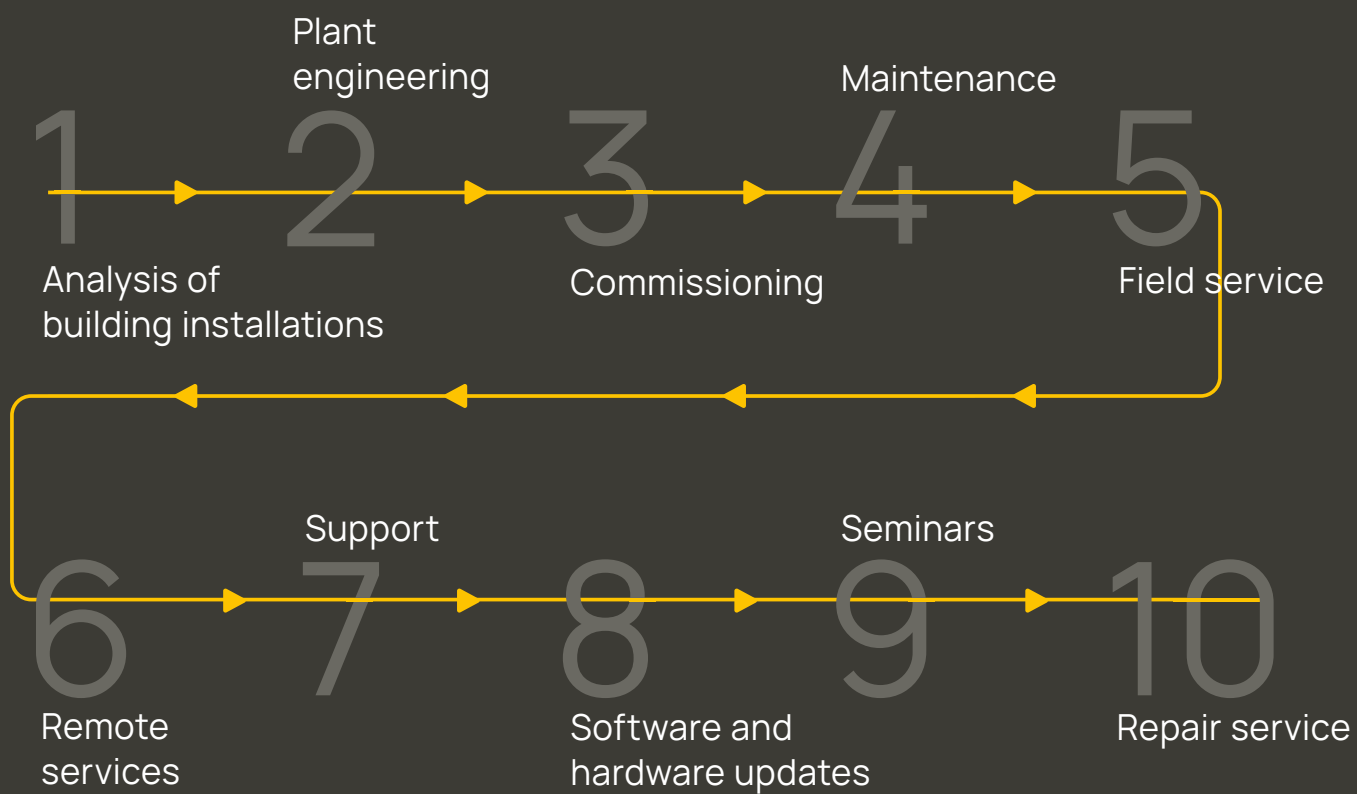

bender.de

Bender GmbH & Co. KG

Londorfer Straße 65
35305 Grünberg
Germany

Tel.: +49 6401 807-0
info@bender.de
www.bender.de

Photos: AdobeStock (© thejokercze, © somchairakin, © leonidkos, © (JLco) Julia Amaral, © Larisa AI) and Bender archive.

2138en / 05.2026 / © Bender GmbH & Co. KG, Germany – Subject to change! The standards listed are based on the edition valid at the time of going to press.

BENDER