Smart Energy & Power Quality Solutions

UMG 96-S2 – energy measurement device



HIGH PRECISION MULTIPURPOSE DEVICE

Janitza®

COST-EFFECTIVE ALL-ROUNDER



YOU INCREASE THE TRANSPARENCY OF YOUR ENERGY DATA – WITH THE UNIVERSAL MEASUREMENT DEVICE UMG 96-S2

Qualified statements about energy consumption and power quality can only be made through measurements that extend beyond the feed point. If you would like to locate disturbances or energy wasters, data must be recorded at multiple points in the network. The granularity (resolution) of the measurement is key.

The new UMG96-S2 is an ideal solution for this task. This energy measurement device stands out as a comprehensive multipurpose device. It is suitable for measuring and controlling electrical variables and energy consumption as well as for monitoring the power quality parameters, such as harmonics. It is used in energy distribution systems, for example, for recording cost centers and monitoring thresholds. In addition, the device can also be used as a measurement value sensor for building management systems or a PLC.

AT A GLANCE

UNIVERSAL AREA OF APPLICATION

Suitable for TN and TT networks with a 1 and 5 A transformer connection

HIGH ACCURACY OF MEASUREMENT

Active energy with precision class 0.5S (.../5 A transformer)

TARIFF SWITCHING

Simple tariff conversion as additional building block for energy and cost transparency

LOW EFFORTS DURING INTEGRATION

An open communication channel via Modbus RTU offers direct access into higher level networks

LOW CONFIGURATION REQUIREMENTS

Straightforward use with low configuration requirements

COMPACT DESIGN

High performance in a compact 96 design with a low installation depth

COMPATIBILITY

Low integration requirements due to high compatibility for conventional transformers

VISUALIZATION AND DOCUMENTATION

Comprehensive options for data acquisition, visualizing and reporting through the GridVis®-Basic (network visualization software)



AUX. SUPPLY
90-265 V AC/90-250 V DC,
300 V CAT III

VOLTAGE MEASUREMENT INPUTS
230 V / 400 V, 300 V CAT III

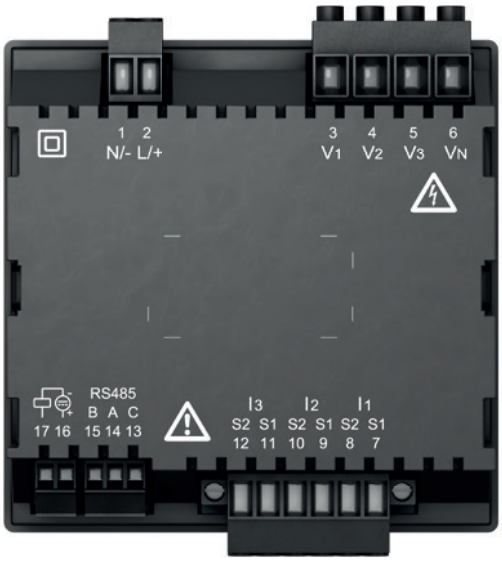

PULSE OUTPUT
Output of energy
consumption as a S0 pulse

CURRENT MEASURING INPUTS
1/5 A, 300 V CAT II

INTERFACE
RS485 with Modbus RTU

MASTER SLAVE PRINCIPLE

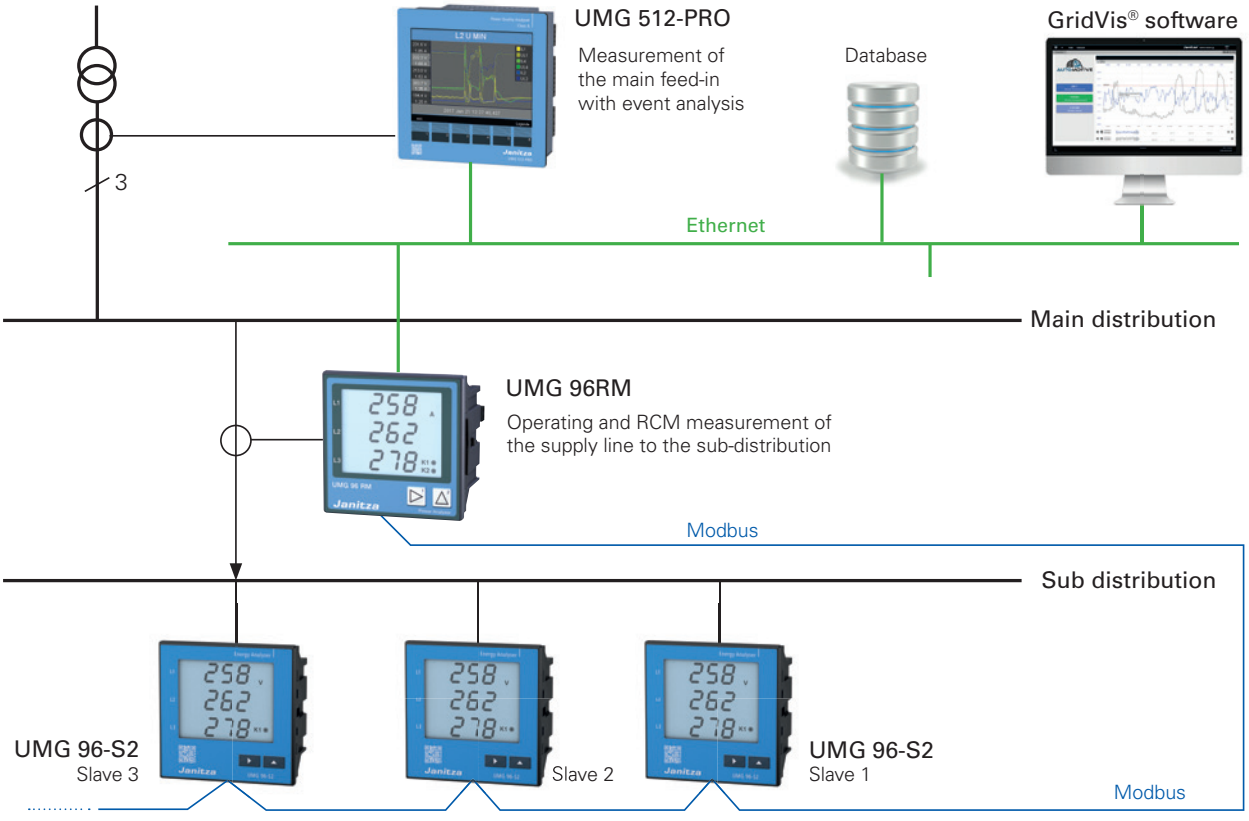

UMG 96-S2

90-265 V AC / 90-250 V DC, 300 V CAT III | **Item no. 52.34.001**

General information	
Measurement precision for voltage, current	0.2%
Measurement precision for active energy (kWh,.../5 A)	Class 0.5S

Inputs and outputs	
Digital output	1
Pulse output	•

Effective value measurement – instantaneous values, e.g.:	
Current, voltage, frequency	•
Active, reactive and apparent power	•
Power factor	•

Energy measurement	
Active, reactive and apparent power	•
Rate conversion	•

Acquisition of mean values, e.g.:	
Voltage, current / actual and maximum	•
Active, reactive and apparent power / actual and maximum	•
Frequency / actual and maximum	•

Measurement of the voltage quality	
Harmonics per order/current and voltage	1.–15.
Distortion factor THD-U/THD-I in %	•

Interface/protocol	
RS485/Modbus RTU	•

Measured voltage input	4 each
Overvoltage category	300 V CAT III
Measured range, voltage L-N, AC (without transformer)	0 ... 300 Vrms
Measured range, voltage L-L, AC (without transformer)	0 ... 425 Vrms
Frequency measuring range	45 ... 65 Hz
Sampling frequency per channel (50/60 Hz)	8 kHz
Measurement in quadrants	4
Networks	TN, TT

Measured current input	3 each
Rated current	1 / 5 A
Overvoltage category	300 V CAT II
Sampling frequency	8 kHz

Mechanical properties	
Net weight (with attached connectors)	Approx. 250 g
Device dimensions in mm (H x W x D)	96 x 96 x 48
Protection class per EN 60529 (with seal = IP54)	Front IP40 / rear IP20
Assembly per IEC EN 60999-1/DIN EN 50022	Front panel installation

Ambient conditions	
Temperature range, Operation	K55 (-10 ... +55°C)

GridVis-Basic software	•

For detailed technical information, please refer to the operating instructions and the Modbus address list at www.janitza.com

• = included

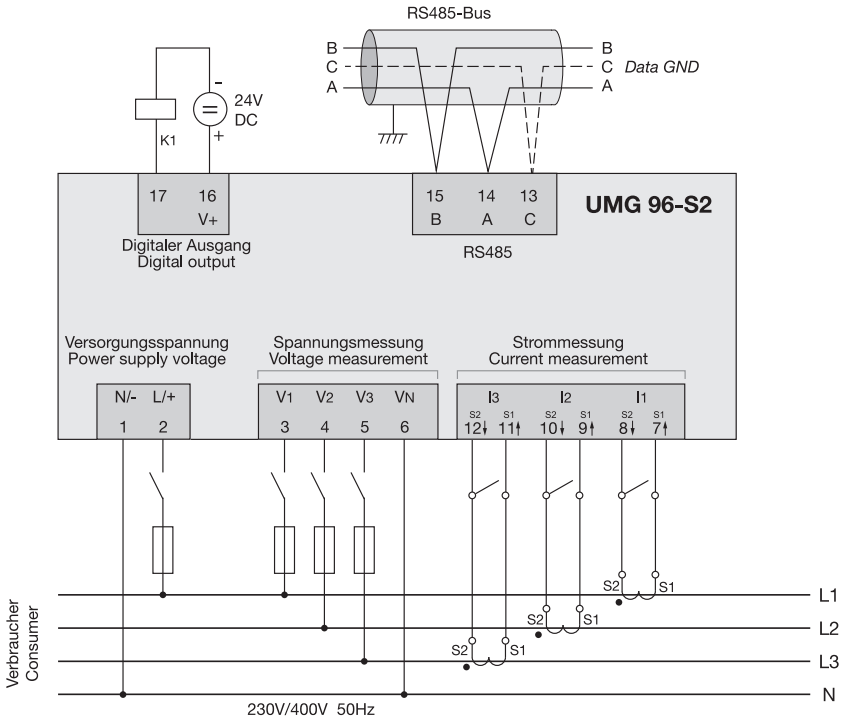

Janitza electronics GmbH
Vor dem Polstück 6 | 35633 Lahnau
Germany

Tel.: +49 6441 9642-0
Fax: +49 6441 9642-30
info@janitza.com | www.janitza.com

Sales partner

optec
energie ist messbar

Optec AG | Guyer-Zeller-Strasse 14 | CH-8620 Wetzikon ZH

Telefon: +41 44 933 07 70 | Telefax: +41 44 933 07 77
E-Mail: info@optec.ch | Internet: www.optec.ch

Item no.: **33.03.501** • Doc. no.: **2.500.161.0** • Status 08/2018 • Subject to technical changes.
The current version of the brochure is available at www.janitza.com.

Janitza®